11-5820-401-34 P-2-1

TECHNICAL MANUAL

DIRECT SUPPORT AND GENERAL SUPPORT MAINTENANCE REPAIR PARTS AND SPECIAL TOOLS LIST (INCLUDING DEPOT MAINTENANCE REPAIR PARTS AND SPECIAL TOOLS) FOR RECEIVER-TRANSMITTER RADIO RT-246/VRC, RT-246A/VRC (NSN 5820-00-892-0623)

HEADQUARTERS, DEPARTMENT OF THE ARMY
31 January 1983

D 101-11:

READEX FICHE best copy available

TECHNICAL MANUAL
NO. 11-5820-401-34P-2-1

HEADQUARTERS
DEPARTMENT OF THE ARMY,
WASHINGTON, DC, *31 January 1983*

DIRECT SUPPORT AND GENERAL SUPPORT MAINTENANCE REPAIR PARTS AND SPECIAL TOOLS LIST (INCLUDING DEPOT MAINTENANCE REPAIR PARTS AND SPECIAL TOOLS) FOR RECEIVER-TRANSMITTER RADIO RT-246/VRC, RT-246A/VRC (NSN 5820-00-892-0623)

Current as of 19 August 1982

REPORTING ERRORS AND RECOMMENDING IMPROVEMENTS

You can help improve this manual. If you find any mistakes or if you know of a way to improve the procedures, please let us know. Mail your letter, DA Form 2028 (Recommended Changes to Publications and Blank Forms), or DA Form 2028-2 located in the back of this manual direct to: Commander, US Army Communications-Electronics Command and Fort Monmouth, ATTN: DRSEL-ME-MP, Fort Monmouth, NJ 07703.

In either case, a reply will be furnished direct to you.

Table of Contents

				Page	Illus Figure
SECTION	I.	Introduction		1	
	II.	Repair Parts List		5	
GROUP	01	Receiver-Transmitters, Radio RT-246/VRC and RT-246A/VRC		5	
		0101	Control Assembly, Front Panel	5	1
		010101	Tuner, Radio Frequency	15	2
		01010101	Circuit Card Assembly, Antenna Board Assembly	21	3
		01010102	Circuit Card Assembly, 1st. RF Board Assembly	25	4
		01010103	Amplifier, Radio Frequency, 2nd. RF Board Assembly	29	5
		01010104	Mixer, Frequency, Mixer Board Assembly	33	6
		01010105	Oscillator, Radio Frequency, Tuner Oscillator	37	7
		01010106	Power Supply	41	8
		01010107	Receiver Subassembly	47	9
		0101010701	Receiver Subassembly, Parent Board-Regulator Assembly	51	10
		01010107011	Receiver Subassembly, Parent Board Assembly	53	11
		01010107012	Filament Regulator (No parts authorized) (Figure 13 not used)	57	12
		0101010702	Tuner, Very High Frequency	61	14
		010102	Oscillator Assembly, Radio Frequency	65	15
		01010201	Oscillator Subassembly, Interpolation Oscillator	67	16
		01010202	Oscillator Subassembly, Reference Oscillator	69	17
		01010203	Switch Assembly	73	18
		010103	Oscillator-Buffer Assembly	75	19
		01010301	Oscillator-Buffer Assembly, Oscillator-Buffer and Parent Board	77	20
		0101030101	Oscillator-Buffer (No parts authorized) (Figure 21 not used)		
		0101030102	Oscillator-Buffer, Case and Tuner	81	22
		01010302	Electronic Component, Oscillator Assembly	87	23
		01010303	Buffer Board	95	24
		010104	Null Switch Assembly	101	25
		010105	Selector Control Assembly	113	26
		010106	Amplifier, Snychro	120	27
		010107	Control Wiring Assembly	123	28
		01010701	Wiring Harness Assembly	129	29
		010108	Switch Assembly	133	30

* This manual supersedes TM 11-5820-401-34P-2-1, 1 March 1978.

		Page	Illus Figure
010109	Panel and Housing Assembly	135	31
01010901	Panel Assembly	139	32
01010902	Gear Set Assembly	145	33
0102	Crystal Reference System Assembly	153	34
010201	Harmonic Generator Assembly	155	35
01020101	Oscillator, Radio Frequency	159	36
010202	Balanced Mixer Assembly	161	37
01020201	Amplifier-Mixer Assembly	165	38
010203	Second Mixer Assembly	167	39
01020301	Mixer Stage Assembly	171	40
010204	1st. and 2nd. IF Amplifier Assembly	173	41
01020401	Intermediate Frequency Amplifier Assembly	177	42
010205	3rd. Intermediate Frequency and Limiter Assembly	179	43
01020501	Amplifier-Limiter Assembly	183	44
010206	Hunt Frequency Discriminator Assembly	185	45
01020601	Frequency Control Assembly	189	46
010207	Phase Discriminator Assembly	191	47
01020701	Frequency Control Assembly	195	48
010208	Chassis Assembly, Electrical	199	49
0103	Amplifier Assembly, IF	203	50
010301	1st. and 2nd. IF Amplifier	205	51
01030101	Amplifier, Intermediate Frequency	209	52
010302	Limiter Discriminator	211	53
01030201	Amplifier Discriminator Assembly	215	54
010303	Amplifier, Audio (Squelch and Pre-Amp Assembly)	219	55
01030301	Amplifier Assembly	223	56
010304	Chassis Assembly, Electrical	227	57
0104	Amplifier Assembly, IF, Audio and Squelch	231	58
010401	Amplifier, Audio Frequency Assembly RCVR Audio Amplifier	233	59
01040101	Amplifier Assembly, Radio Frequency	237	60
010402	Amplifier, Limiter, RCVR Squelch Amplifier	239	61
01040201	Direct Current Amplifier Assembly	243	62
010403	Filter, Band Pass (No parts authorized) (Figure 63 not used)		
010404	Chassis Assembly, Electrical	247	64
0105	Transmitter Speech Amplifier and Modulator Assembly	251	65
010501	Modulator, Radio XMTR, 11.5 MHz Modulator Assembly	253	66
01050101	Modulator, Radio Transmitter	257	67
010502	Transmitter Phase Discriminator Assembly	261	68
01050201	Frequency Control Assembly	265	69
010503	Transmitter, IF, 1st. and 2nd. Amplifier Assembly	267	70
01050301	Amplifier Assembly	271	71
010504	Generator, Reference Signal, Hunt Generator	273	72
01050401	Frequency Control Assembly	277	73
010505	Transmitter Speech Amplifier Assembly	279	74
01050501	Amplifier Assembly, Audio Frequency	283	75
010506	Chassis Assembly, Electrical	287	76
0106	Power Supply Assembly	291	77
010601	Power Supply, Electrical	295	78
010602	Circuit Card Assembly, Cover Assembly	299	79
010603	Chassis Assembly	303	80
010604	Resistor Assembly	305	81
010605	Power Supply Panel Assembly	307	82
0107	Semiconductor Device Assembly	311	83
0108	Power Amplifier Assembly	317	84
010801	RF Amplifier Assembly, Final Amplifier	323	85
010802	Gear Set Assembly	325	86
010803	Wiring Assembly	327	87
01080301	Wiring Harness Assembly	331	88
010804	Tank Circuit Assembly	335	89
010805	Amplifier Subassembly, Driver	339	90
01080501	Tuner, Radio Frequency, Driver Tuning Assembly	343	91
01080502	Driver Amplifier Assembly	347	92
0109	Voltage Regulator Assembly, Voltage Regulator and Housing	353	93
010901	Voltage Regulator Assembly	357	94

			Page	Illus Figure
	010902	Chassis Assembly, Electrical	359	95
	010903	Wiring Assembly, Voltage Regulator Chassis Wiring Assembly	363	96
	01090301	Wiring Harness Assembly	367	97
	010904	Housing Assembly	373	98
	0110	Gear Set Assembly, Intermediate Gear Train	375	99
	0111	Cover Assembly, Right Side	377	100
	0112	Cover Assembly, Bottom	379	101
	0113	Cover Assembly, Top	381	102
	0114	Cover Assembly, Heat Exchanger	383	103
SECTION III.	Special Tools List (Not applicable)			
IV.	National Stock Number and Part Number Index		384	
GROUP 01	Receiver-Transmitters, Radio RT-246/VRC and RT-246A/VRC		415	104
	0101	Control Assembly, Front Panel	425	105
	010101	Tuner, Radio Frequency	431	106
	01010101	Circuit Card Assembly, Antenna Board Assembly (See Figure 4)		
	01010102	Circuit Card Assembly, 1st. RF Board Assembly (See Figure 5)		
	01010103	Amplifier, Radio Frequency, 2nd. RF Board Assembly (See Figure 6)		
	01010104	Mixer Stage, Frequency, Mixer Board Assembly	435	107
	01010105	Oscillator, Radio Frequency, Tuner Oscillator Board	439	108
	01010106	Power Supply Assembly	445	109
	01010107	Receiver Subassembly (See Figure 10)		
	0101010701	Receiver Subassembly, Parent Board-Regulator Assembly (See Figure 11)		
	01010107011	Receiver Subassembly, Parent Board Assembly (See Figure 12)		
	01010107012	Filament Regulator (No parts authorized) (Figure 110 not used)		
	010102	Oscillator Assembly, Radio Frequency	449	111
	01010201	Oscillator Subassembly, Interpolation Oscillator	453	112
	01010202	Oscillator Subassembly, Reference Oscillator	457	113
	01010203	Switch Assembly	461	114
	010103	Oscillator-Buffer (See Figure 19)		
	01010301	Oscillator-Buffer, Oscillator-Buffer and Parent Board (See Figure 20)		
	0101030101	Oscillator-Buffer (See Figure 21)		
	0101030102	Oscillator-Buffer, Case and Tuner (See Figure 22)		
	01010302	Electronic Component Assembly, Oscillator Assembly	467	115
	01010303	Buffer Board	473	116
	01010303	Buffer Board (Same as Group 01010302 and Figure 24)		
	010104	Null Switch Assembly (See Figure 25)		
	010105	Selector Control Assembly (See Figure 26)		
	010106	Amplifier, Synchro	479	117
	010107	Control Wiring Assembly (See Figure 28)		
	01010701	Wiring Harness Assembly (See Figure 29)		
	010108	Switch Assembly (See Figure 30)		
	010109	Panel and Housing Assembly (See Figure 31)		
	01010901	Panel Assembly (See Figure 32)		
	01010902	Gear Set Assembly (See Figure 33)		
	0102	Crystal Reference System Assembly	485	118
	010201	Harmonic Generator Assembly	487	119
	01020101	Oscillator Assembly, Radio Frequency	491	120
	010202	Balanced Mixer Assembly	493	121
	01020201	Amplifier-Mixer Assembly	497	122
	010203	Second Mixer Assembly	499	123
	01020301	Mixer Stage Assembly	503	124
	010204	1st. and 2nd. Intermediate Frequency Amplifier	505	125
	01020401	Intermediate Frequency Amplifier Assembly	509	126
	010205	3rd. Intermediate Frequency and Limiter Assembly	511	127
	01020501	Amplifier-Limiter Assembly	515	128
	010206	Hunt Frequency Discriminator Assembly	517	129
	01020601	Frequency Control Assembly	521	130
	010207	Phase Discriminator Assembly	523	131
	01020701	Frequency Control Assembly	527	132
	010208	Chassis Assembly, Electrical (See Figure 49)		
	0103	Amplifier Assembly, IF	531	133
	010301	1st. and 2nd. Intermediate Frequency Amplifier	533	134
	01030101	Amplifier, Intermediate Frequency	537	135
	010302	Limiter-Discriminator	539	136

			Page	Illus Figure
	01030201	Amplifier Discriminator Assembly	543	137
	010303	Amplifier, Audio, Audio and Squelch Pre-Amp Assembly	545	138
	01030301	Amplifier Assembly	549	139
	010304	Chassis Assembly, Electrical (See Figure 57)		
	0104	Amplifier Assembly, IF, Audio and Squelch Amplifier	553	140
	010401	Amplifier, Audio Frequency Assembly RCVR Audio Amplifier	555	141
	01040101	Amplifier Assembly, Radio Frequency	559	142
	010402	Amplifier, Limiter, RCVR Squelch Amplifier	561	143
	01040201	District Current Amplifier Assembly	565	144
	010403	Filter, Band Pass Squelch Filter (No parts authorized) (Figure 145 not used)		
	010404	Chassis Assembly, Electrical (See Figure 64)		
	0105	Transmitter Speech Amplifier and Modulator Assembly	569	146
	010501	Modulator, Radio XMTR, 11.5 MHz Modulator Assembly	571	147
	01050101	Modulator, Radio Transmitter	575	148
	010502	Transmitter Phase Discriminator Assembly	579	149
	01050201	Frequency Control Assembly	583	150
	010503	Transmitter, IF, 1st. and 2nd. IF Amplifier Assembly	585	151
	01050301	Amplifier Assembly	589	152
	010504	Generator Ref Signal, Hunt Generator	591	153
	01050401	Frequency Control Assembly	595	154
	010505	Transmitter Speech Amplifier Assembly	597	155
	01050501	Amplifier Assembly, Audio Frequency	601	156
	010506	Chassis Assembly, Electrical (See Figure 76)		
	0106	Power Supply Assembly	607	157
	010601	Power Supply, Electrical, Circuit Board Assembly	611	158
	010602	Circuit Card Assembly, Cover Assembly	615	159
	010603	Chassis Assembly	619	160
	010604	Resistor Assembly	621	161
	010605	Power Supply Panel Assembly	623	162
	0107	Semiconductor Device Assembly	627	163
	0108	Power Amplifier Assembly (See Figure 84)		
	010801	RF Amplifier Assembly (See Figure 85)		
	010802	Gear Set (See Figure 86)		
	010803	Wiring Assembly (See Figure 87)		
	01080301	Wiring Harness Assembly (See Figure 88)		
	010804	Tank Circuit Assembly (See Figure 89)		
	010805	Amplifier Subassembly, Driver (See Figure 90)		
	01080501	Tuner, Radio Frequency, Driver Tuning Assembly (See Figure 91)		
	01080502	Driver Amplifier Assembly (See Figure 92)		
	0109	Voltage Regulator Assembly, Voltage Regulator and Housing (See Figure 93)		
	010901	Voltage Regulator Assembly	631	164
	010902	Chassis Assembly, Electrical (See Figure 95)		
	010903	Wiring Assembly, Voltage Regulator Chassis Wiring Assembly (See Figure 96)		
	01090301	Wiring Harness Assembly (See Figure 97)		
	010904	Housing Assembly (See Figure 98)		
	0110	Gear Set Assembly, Intermediate Gear Train (See Figure 99)		
	0111	Cover Assembly, Right Side (See Figure 100)		
	0112	Cover Assembly, Bottom (See Figure 101)		
	0113	Cover Assembly, Top (See Figure 102)		
	0114	Cover Assembly Heat Exchanger. (See Figure 103)		
SECTION III.		Special Tools List (Not applicable)		
IV.		National Stock Number and Part Number Index	633	

SECTION I

INTRODUCTION

1. Scope

This manual lists spares and repair parts; special tools; special test, measurement, and diagnostic equipment (TMDE), and other special support equipment required for performance of direct support and general support maintenance of the RT-246/VRC and RT-246A/VRC. It authorizes the requisitioning and issue of spares and repair parts as indicated by the source and maintenance codes.

2. General

This Repair Parts and Special Tools List is divided into the following sections:

a. Section II and V. Repair Parts List. A list of spares and repair parts authorized for use in the performance of maintenance. The list also includes parts which must be removed for replacement of the authorized parts. Parts lists are composed of functional groups in numeric sequence, with the parts in each group listed in figure and item number sequence.

b. Section III and VI. Special Tools List. Not applicable.

c. Section IV and VII. National Stock Number and Part Number Index. A list, in National item identification number (NIIN) sequence, of all National stock numbers (NSN) appearing in the listings, followed by a list, in alphameric sequence, of all part numbers appearing in the listings. National stock numbers and part numbers are cross-referenced to each illustration figure and item number appearance.

3. Explanation of Columns

a. Illustration. This column is divided as follows:

(1) *Figure number.* Indicates the figure number of the illustration on which the item is shown.

(2) *Item number.* The number used to identify item called out in the illustration.

b. Source, Maintenance, and Recoverability (SMR) Codes.

(1) *Source code.* Source codes indicate the manner of acquiring support items for maintenance, repair, or overhaul of end items. Source codes are entered in the first and second positions of the Uniform SMR Code format as follows:

Code	*Definition*
PA	Item procured and stocked for anticipated or known usage.
PB	Item procured and stocked for insurance purpose because essentiality dictates that a minimum quantity be available in the supply system.
PD	Support item, excluding support equipment, procured for initial issue or outfitting and stocked only for subsequent or additional initial issues or outfittings. Not subject to automatic replenishment.
PF	Support equipment which will not be stocked but which will be centrally procured on demand.
AO	Item to be assembled at organizational level.
AF	Item to be assembled at direct support maintenance level.
AH	Item to be assembled at general support maintenance level.
AD	Item to be assembled at depot maintenance level.
XA	Item is not procured or stocked because the requirements for the item will result in the replacement of the next higher assembly.
XB	Item is not procured or stocked. If not available through salvage, requisition.
XD	A support item that is not stocked. When required, item will be procured through normal supply channels.

NOTE

Cannibalization or salvage may be used as a source of supply for any items source coded above except those coded XA and aircraft support items as restricted by AR 700-42.

(2) *Maintenance code.* Maintenance codes are assigned to indicate the levels of maintenance authorized to USE and REPAIR support items. The maintenance codes are entered in the third and fourth positions of the Uniform SMR Code format as follows:

(*a*) The maintenance code entered in the third position will indicate the lowest maintenance level authorized to remove, replace, and use the support item. The maintenance code entered in the third position will indicate one of the following levels of maintenance:

Code	*Application/Explanation*
O	Support item is removed, replaced, used at the organizational level.
F	Support item is removed, replaced, used at the direct support level.
H	Support item is removed, replaced, used at the general support level.

Code	Definition
D—	Support items that are removed, replaced, used at depot, mobile depot, specialized repair activity only.

(*b*) The maintenance code entered in the fourth position indicates whether the item is to be repaired and identifies the lowest maintenance level with the capability to perform complete repair (i.e., all authorized maintenance functions). This position will contain one of the following maintenance codes:

Code	Application/Explanation
F—	The lowest maintenance level capable of complete repair of the support item is the direct support level.
H—	The lowest maintenance level capable of complete repair of the support item is the general support level.
D—	The lowest maintenance level capable of complete repair of the support item is the depot level.
L—	Repair restricted to designated specialized repair activity.
Z—	Nonreparable. No repair is authorized.

(3) *Recoverability code.* Recoverability codes are assigned to support items to indicate the disposition action on unserviceable items. The recoverability code is entered in the fifth position of the Uniform SMR Code format as follows:

Recoverability codes	Definition
Z—	Nonreparable item. When unserviceable, condemn and dispose at the level indicated in position 3.
F—	Reparable item. When uneconomically reparable, condemn and dispose at the direct support level.
H—	Reparable item. When uneconomically reparable, condemn and dispose at the general support level.
D—	Reparable item. When beyond lower level repair capability, return to depot. Condemnation and disposal not authorized below depot level.
L—	Reparable item. Repair, condemnation, and disposal not authorized below depot/specialized repair activity level.
A—	Item requires special handling or condemnation procedures because of specific reasons (i.e., precious metal content, high dollar value, critical material or hazardous material). Refer to appropriate manuals/directives for specific instructions.

c. National Stock Number. Indicates the National stock number assigned to the item and will be used for requisitioning purposes.

d. Federal Supply Code for Manufacturer (FSCM). The FSCM is a 5-digit numeric code listed in SB 708-41/42 which is used to identify the manufacturer, distributor, or Government agency, etc.

e. Part Number. Indicates the primary number used by the manufacturer (individual, company, firm, corporation, or Government activity), which controls the design and characteristics of the item by means of its engineering drawings, specifications, standards, and inspection requirements to identify an item or range of items.

NOTE

When a stock numbered item is requisitioned, the repair part received may have a different part number than the part being replaced.

f. Description. Indicates the Federal item name and, if required, a minimum description to identify the item.

g. Unit of Measure (U/M). Indicates the standard of the basic quantity of the listed item as used in performing the actual maintenance function. This measure is expressed by a two-character alphabetical abbreviation (e.g., ea, in, pr, etc). When the unit of measure differs from the unit of issue, the lowest unit of issue that will satisfy the required units of measure will be requisitioned.

h. Quantity Incorporated in Unit. Indicates the quantity of the item used in the breakout shown on the illustration figure, which is prepared for a functional group, subfunctional group, or an assembly.

4. Special Information

a. Detailed assembly instructions for items source coded to be assembled are found in TM 11-5820-401-34-2. Assembly components are listed immediately following the item to be assembled.

b. The following publications pertain to the RT-246/VRC and RT-246A/VRC and its components:

TM 11-5820-401-12, Radio Sets AN/VRC-12, AN/VRC-43, AN/VRC-44, AN/VRC-45, AN/VRC-46, AN/VRC-47, AN/VRC-48, AN/VRC- 49, AN/VRC-54 and AN/VRC-55; Mountings MT-1029/VRC and MT-1898/VRC, Antenna AT-912/VRC; Control Frequency Selector C-2742/VRC; and Control Radio Set C-2299/VRC.

TM 11-5820-401-20P, Radio Sets AN/VRC-12, AN/VRC-43, AN/VRC-44, AN/VRC-45, AN/VRC-45, AN/VRC-47, AN/VRC-48, AN/VRC-49, AN/VRC-54, AN/VRC-55; Receiver-Transmitters, Radio RT-246/VRC, RT-246A/VRC, RT-524/VRC and RT-524A/VRC; Receivers, Radio R-442/VRC and R-442A/VRC; Mountings MT-1029/VRC and MT-1898/VRC; Control, Frequency Selector C-2742/VRC and Control, Radio Set C-2299/VRC.

TM 11-5820-401-34-2, Radio Sets AN/VRC-12, AN/VRC-43, AN/VRC-44, AN/VRC-46, AN/VRC-47, AN/VRC-48, and AN/VRC-49, Receiver-Transmitters, Radio RT-246/VRC, RT-

246A/VRC, RT-524/VRC and RT-524A/VRC.

c. National stock numbers (NSN's) that are missing from P source coded items have been applied for and will be added to this TM by future change/revision when they are entered in the Army Master Data File (AMDF). Until the NSN's are established and published, submit exception requisitions to: Commander, US Army Communications-Electronics Command and Fort Monmouth, ATTN: DRSEL-MM, Fort Monmouth, NJ 07703 for the part required to support your equipment.

5. How to Locate Repair Parts

a. When National stock number or part number is unknown.

(1) *First.* Using the table of contents, determine the functional group within which the item belongs. This is necessary since illustrations are prepared for functional groups and listings are divided into the same groups.

(2) *Second.* Find the illustration covering the functional group to which the item belongs.

(3) *Third.* Identify the item on the illustration and note the illustration figure and item number of the item.

(4) *Fourth.* Using the Repair Parts Listing, find the figure and item number noted on the illustration.

b. When National stock number or part number is known.

(1) *First.* Using the Index of National Stock Numbers and Part Numbers, find the pertinent National stock number or part number. This index is in NIIN sequence followed by a list of part numbers in alphameric sequence, cross-referenced to the illustration figure number and item number.

(2) *Second.* After finding the figure and item number, locate the figure and item number in the repair parts list.

6. Abbreviations

Not applicable.

(Next printed page is 4.1)

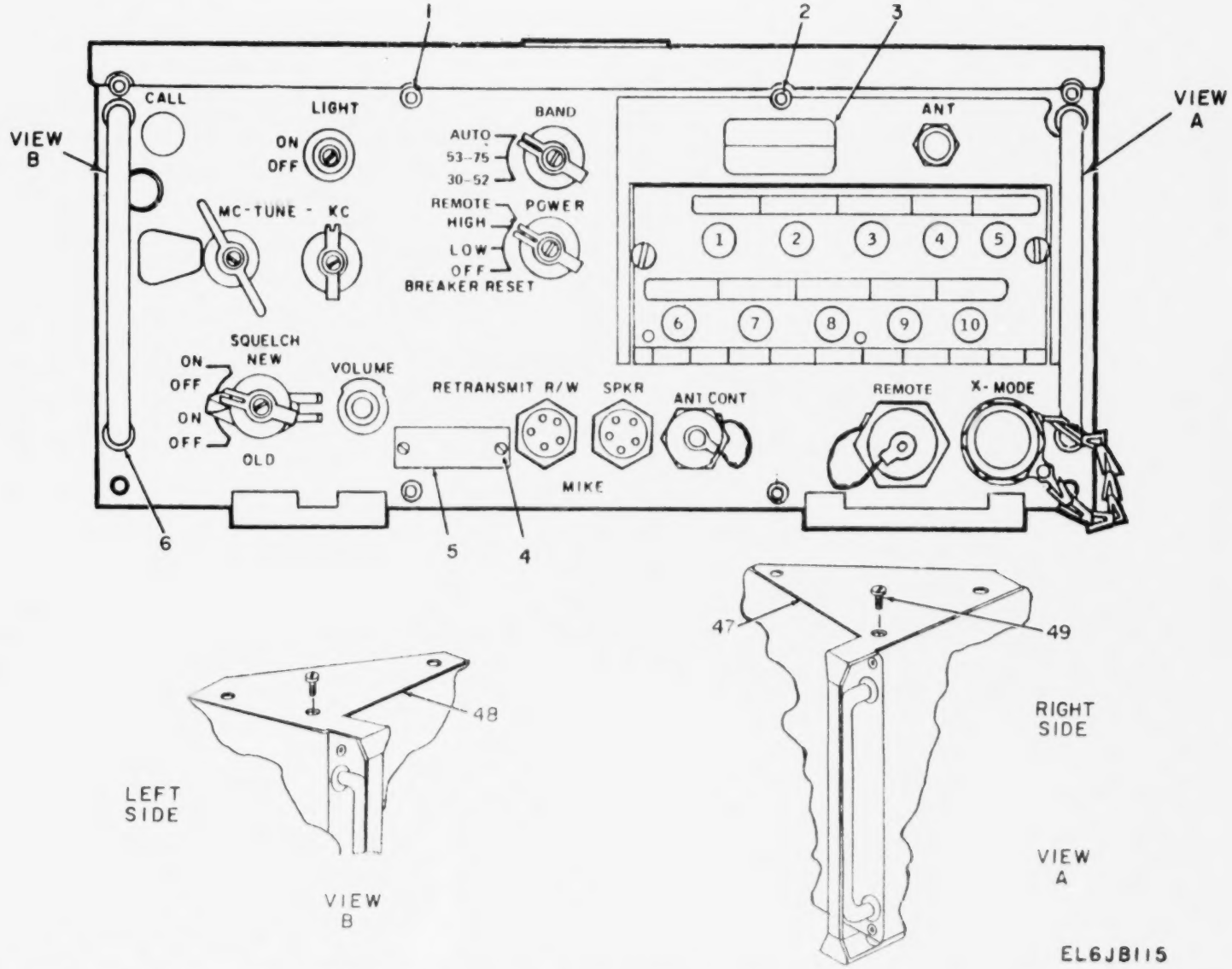

Figure 1. Receiver-Transmitters, Radio RT-246/VRC and RT-246A/VRC (Sheet 1 of 4).

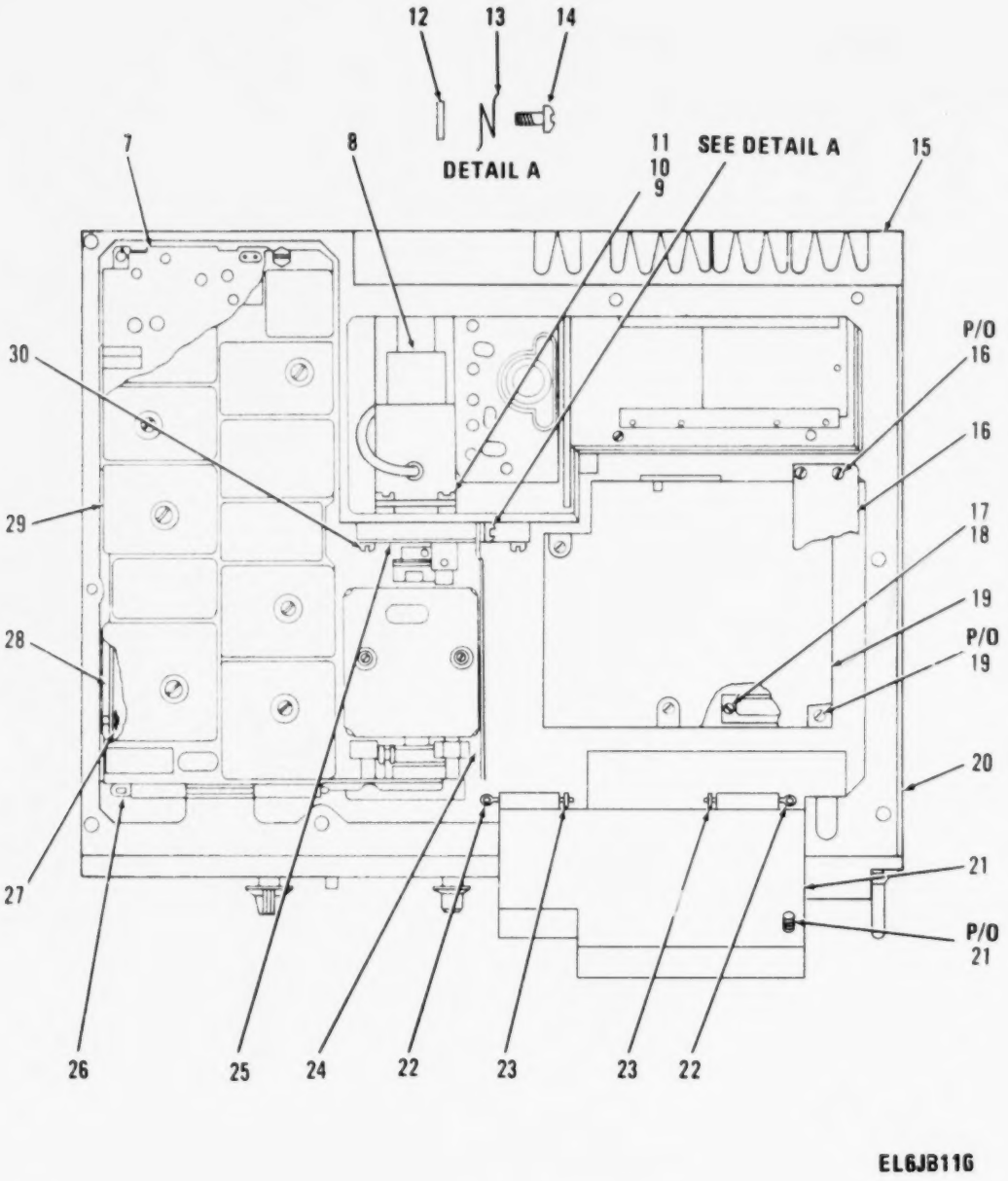

Figure 1. Receiver-Transmitters, Radio RT-246/VRC and RT-246A/VRC (Sheet 2 of 4).

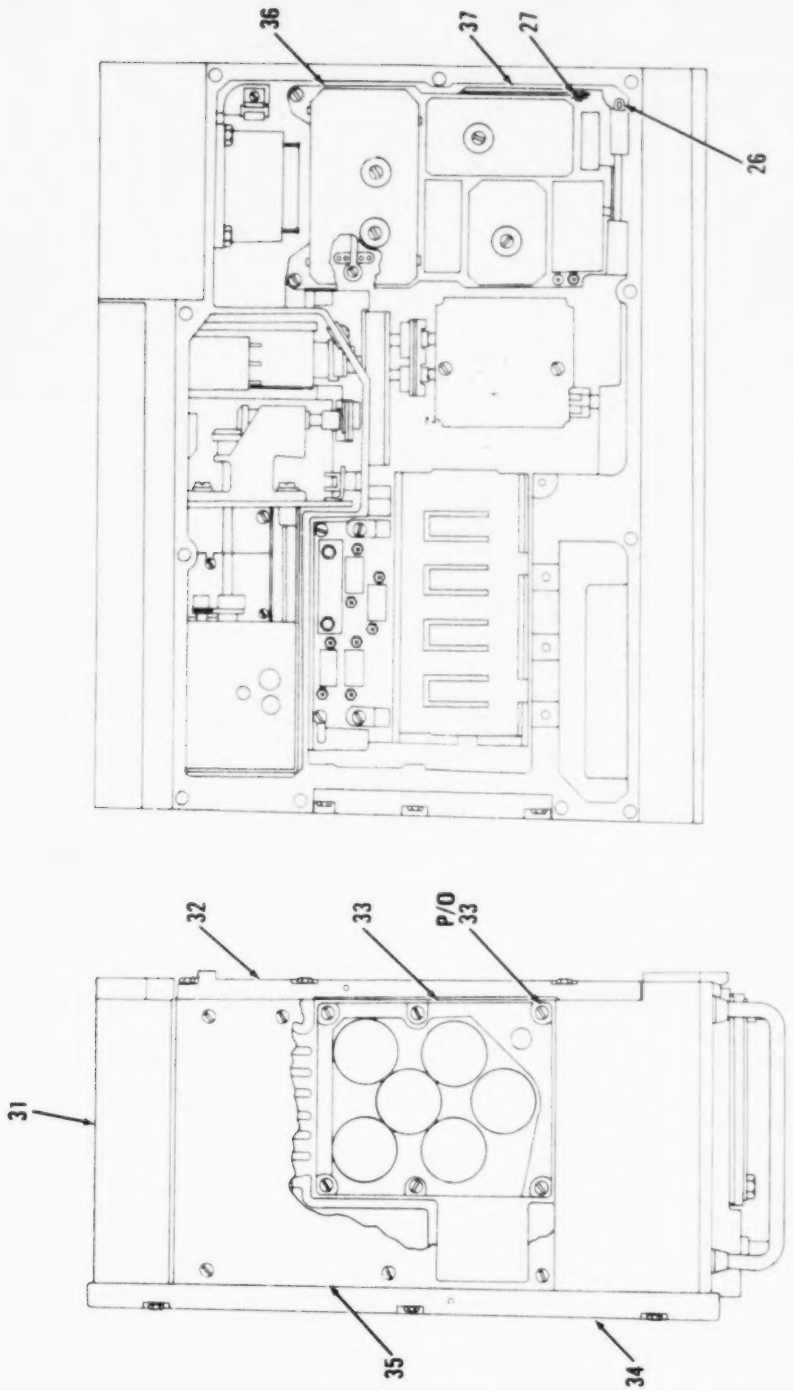

Figure 1. Receiver-Transmitters, Radio RT-246/VRC and RT-246A/VRC (Sheet 3 of 4).

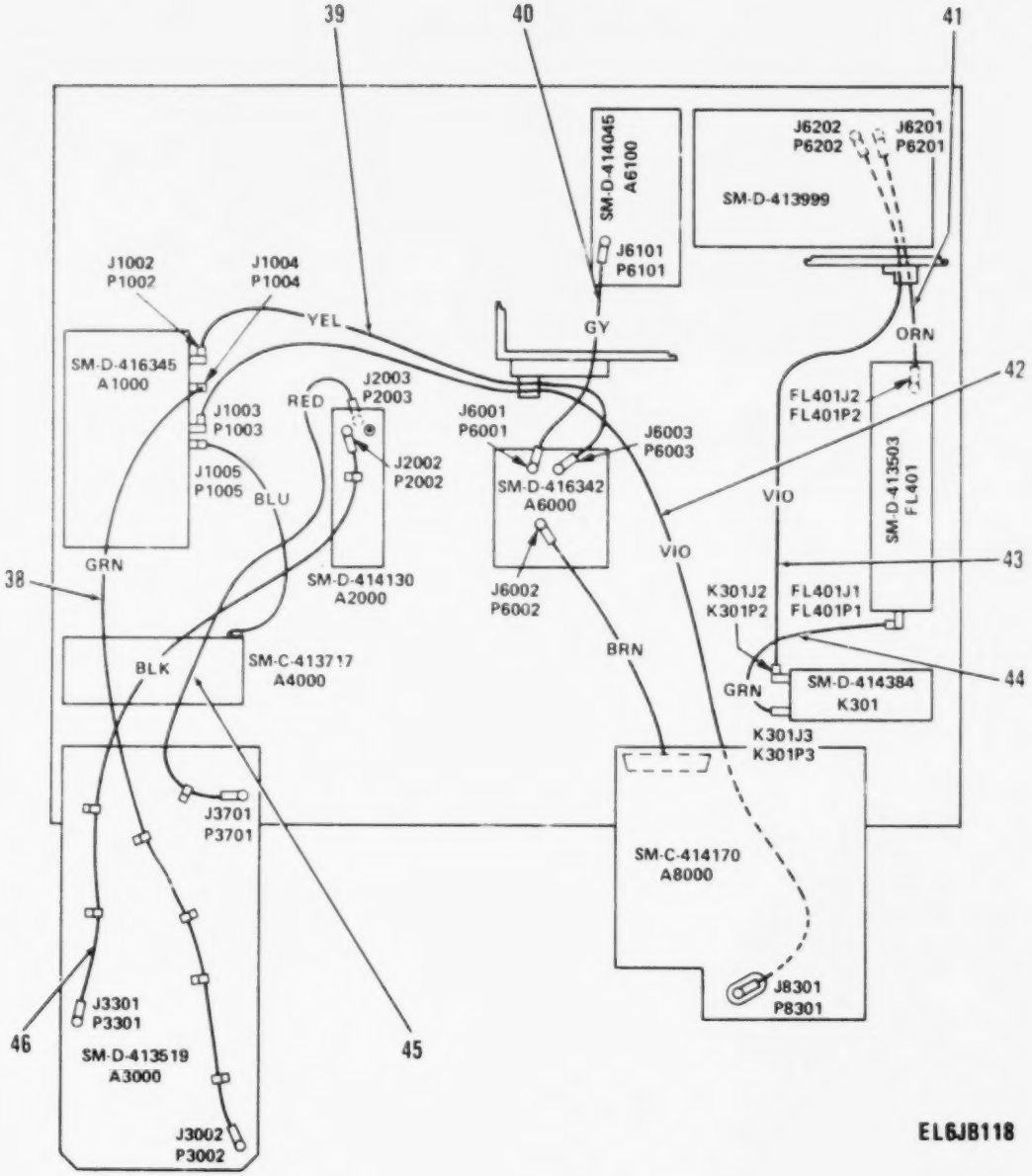

Figure 1. Receiver-Transmitters, Radio RT-246/VRC and RT-246A/VRC (Sheet 4 of 4).

(1) ILLUSTRATION (a) FIG NO	(1) ILLUSTRATION (b) ITEM NO	(2) SMR CODE	(3) NATIONAL STOCK NUMBER	(4) FSCM	(5) PART NUMBER	(6) DESCRIPTION USABLE ON CODE	(7) U/M	(8) QTY INC IN UNIT
						GROUP 01 RECEIVER-TRANSMITTERS,RADIO		
						RT-246/VRC AND RT-246A/VRC		
						SM-D-413501 DL-SM-B-413500		
1	1	PAFZZ	5305-00-137-7924	80063	SM-B-413508-3	SCREW,CAP,SOCKET HE	EA	2
1	2	PAFZZ	5305-00-151-6202	80063	SM-B-413508-4	SCREW,CAP,SOCKET HE	EA	1
1	3	PADZZ	7690-01-125-1398	80063	SM-C-921086	LABEL	EA	1
1	4	PAFZZ	5305-00-253-5609	96906	MS21318-13	SCREW,DRIVE	EA	2
1	5	XBFZZ		80063	SM-C-481751	PLATE,EJENT	EA	1
1	6	ADDDD		80063	SM-D-414306	CONTROL ASSY	EA	1
1	7	PAFDD	5820-00-457-0569	80063	SM-D-413620	AMPLIFIER ASSEMBLY	EA	1
1	8	XAFFF		05106	67A176	MOTOR,DC 22 TO 32 VDC,OUTPUT SHAFT ROTATION 320EG @ MIN,PLUS 2 MINUS 0	EA	1
1	9	PAFZZ	5340-00-873-2215	80063	SM-B-413515	CLAMP,RIM CLENCHIN	EA	4
1	10	PAFZZ	5305-00-945-2394	96906	MS35265-27	SCREW,MACHINE	EA	4
1	11	PAFZZ	5310-00-045-4007	96906	MS35338-41	WASHER,LOCK	EA	4
1	12	PAFZZ	5310-00-951-4679	96906	MS27183-3	WASHER,FLAT	EA	1
1	13	PAFZZ	5360-00-884-2473	80063	SM-C-413513	SPRING,HELICAL,TORS	EA	1
1	14	PAFZZ	5305-00-826-5833	80063	SM-C-413521	SCREW,SHOULDER	EA	1
1	15	PAFDD	5820-00-457-0575	80063	SM-D-413496	AMPLIFIER,RADIO FRE	EA	1
1	16	PAFZZ	5915-00-892-3013	80063	SM-D-413503	FILTER,LOW PASS LOW PASS LC,VSWR 1.5 TO 1,50 TO 54 MHZ FREQ, 50 WATT	EA	1
1	17	PAFZZ	5305-00-054-5637	96906	MS51957-3	SCREW,MACHINE	EA	2
1	18	PAFZZ	5310-00-543-5060	96906	MS35338-39	WASHER,LOCK	EA	2
1	19	PAFDD	5820-00-995-9647	80063	SM-D-414304	POWER SUPPLY	EA	1
1	20	XADDD		80063	SM-D-414112	VOLTAGE REG ASSY	EA	1
1	21	PAFDD		80063	SM-C-414170	AMPL-MOD ASSY	EA	1
1	22	PAFZZ	5315-00-823-8764	80063	SM-B-413512	PIN,STRAIGHT,HEADE	EA	2
1	23	PAFZZ	5365-00-988-2387	80063	SM-B-413516	RING,RETAINING	EA	2
1	24	PAFZZ	5820-00-884-2472	80063	SM-B-413510	ARM,LATCH	EA	1
1	25	PAHDL	3020-00-367-9159	80063	SM-D-413592	GEAR SET ASSEMBLY	EA	1
1	26	PAFZZ	5315-00-858-6642	80063	SM-B-413506	PIN,STRAIGHT,HEADED	EA	1
1	27	PABZZ	5365-00-285-6888	74136	5133-15	RING,RETAINING	EA	2
1	28	PAFZZ	5820-00-858-6484	80063	SM-C-413504-1	ARM,SIDE	EA	1
1	29	PAFDD		80063	SM-D-413519	XTAL REF SYS ASSY	EA	1
1	30	PAHZZ	5305-00-984-4989	96906	MS35206-229	SCREW,MACHINE	EA	4
1	31	XBDZZ		80063	SM-C-414361	COVER ASSY	EA	1
1	32	PADFF	5820-01-077-4505	80063	SM-D-414288	COVER ASSEMBLIES	EA	1
1	33	PAFHH	5820-01-016-2300	80063	SM-D-413928	CIRCUIT CARD ASSEMB	EA	1
1	34	PADFF	5820-00-884-2466	80063	SM-D-414297	COVER,ASSEMBLY	EA	1
1	35	ADDZZ		80063	SM-C-414284	COVER ASSY	EA	1
1	36	PAFHH	5820-00-491-5256	80063	SM-C-413717	AMPLIFIER ASSEMBLY	EA	1

(1) ILLUSTRATION FIG NO	(1) ILLUSTRATION ITEM NO	(2) SMR CODE	(3) NATIONAL STOCK NUMBER	(4) FSCM	(5) PART NUMBER	(6) DESCRIPTION USABLE ON CODE	(7) U/M	(8) QTY INC
1	37	PAFZZ	5820-00-858-6464	80063	SM-C-413504-2	ARM,SLIDE	EA	1
1	38	PAFZA	5995-00-853-6775	80063	SM-D-414364-GR4	CABLE ASSEMBLY,RADI	EA	1
1	39	PAFZA	5995-00-823-2599	80063	SM-D-414364-13	CABLE ASSEMBLY,RADI	EA	1
1	40	PAFZA	5995-00-823-2934	80063	SM-D-414364-GR8	CABLE ASSEMBLY,RADI	EA	1
1	41	PAFZA	5995-00-823-2600	80063	SM-D-414364-GR10	CABLE ASSEMBLY,RADI	EA	1
1	42	PAFZA	5995-00-823-2603	80063	SM-D-414364-GR9	CABLE ASSEMBLY,RADI	EA	1
1	43	PAFZA	5995-00-823-2602	80063	SM-D-414364-12	CABLE ASSEMBLY,RADI	EA	1
1	44	PAFZA	5995-00-823-2608	80063	SM-D-414364-GR11	CABLE ASSEMBLY,RADI	EA	1
1	45	PAFZA	5995-00-823-2937	80063	SM-D-414364-GR6	CABLE ASSEMBLY,RADI	EA	1
1	46	PAFZA	5995-00-823-2935	80063	SM-D-414364-GR5	CABLE ASSEMBLY,RADI	EA	1
1	47	PAFZZ	5820-00-057-7756	14850	A1-8882D	GUARD ASSY,RIGHT HA	EA	1
1	48	PAFZZ	5820-00-089-0911	14850	A1-8883D	GUARD ASSEMBLY	EA	1
1	49	PAFZZ		14850	D1-8892B	SCREW,EXTERNALLY RE	EA	7

6/(7 BLANK)

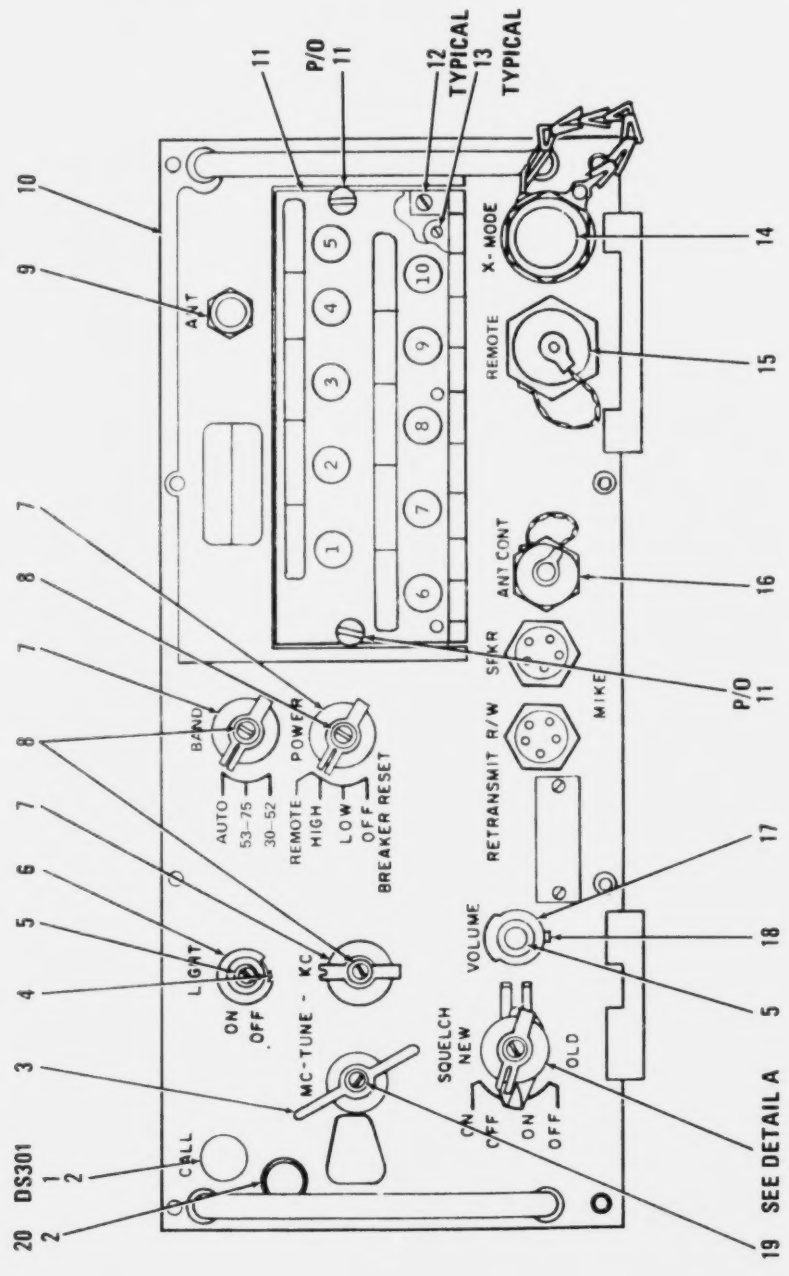

Figure 2. Control Assembly, Front Panel (Sheet 1 of 7).

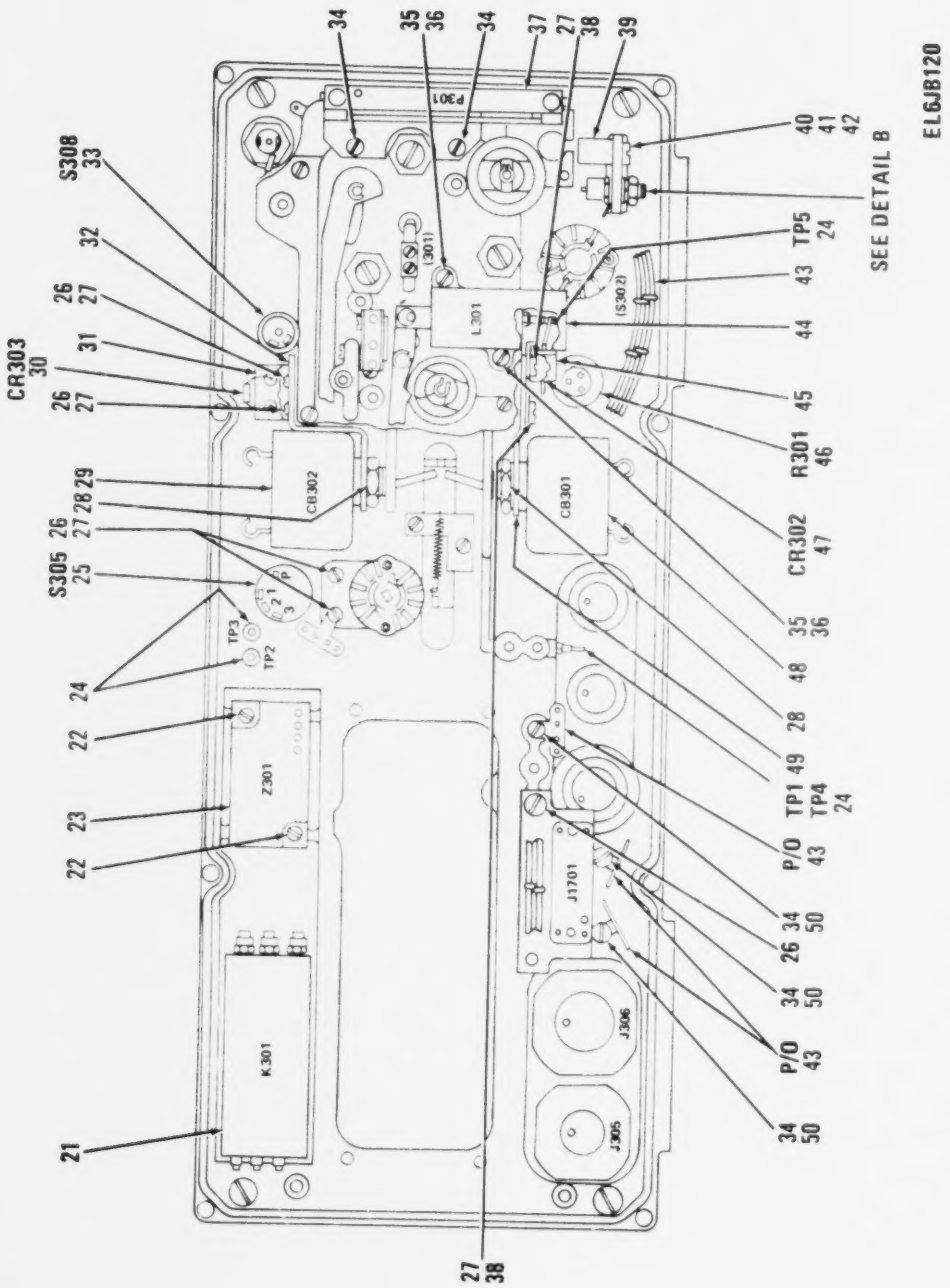

Figure 2. Control Assembly, Front Panel (Sheet 2 of 7).

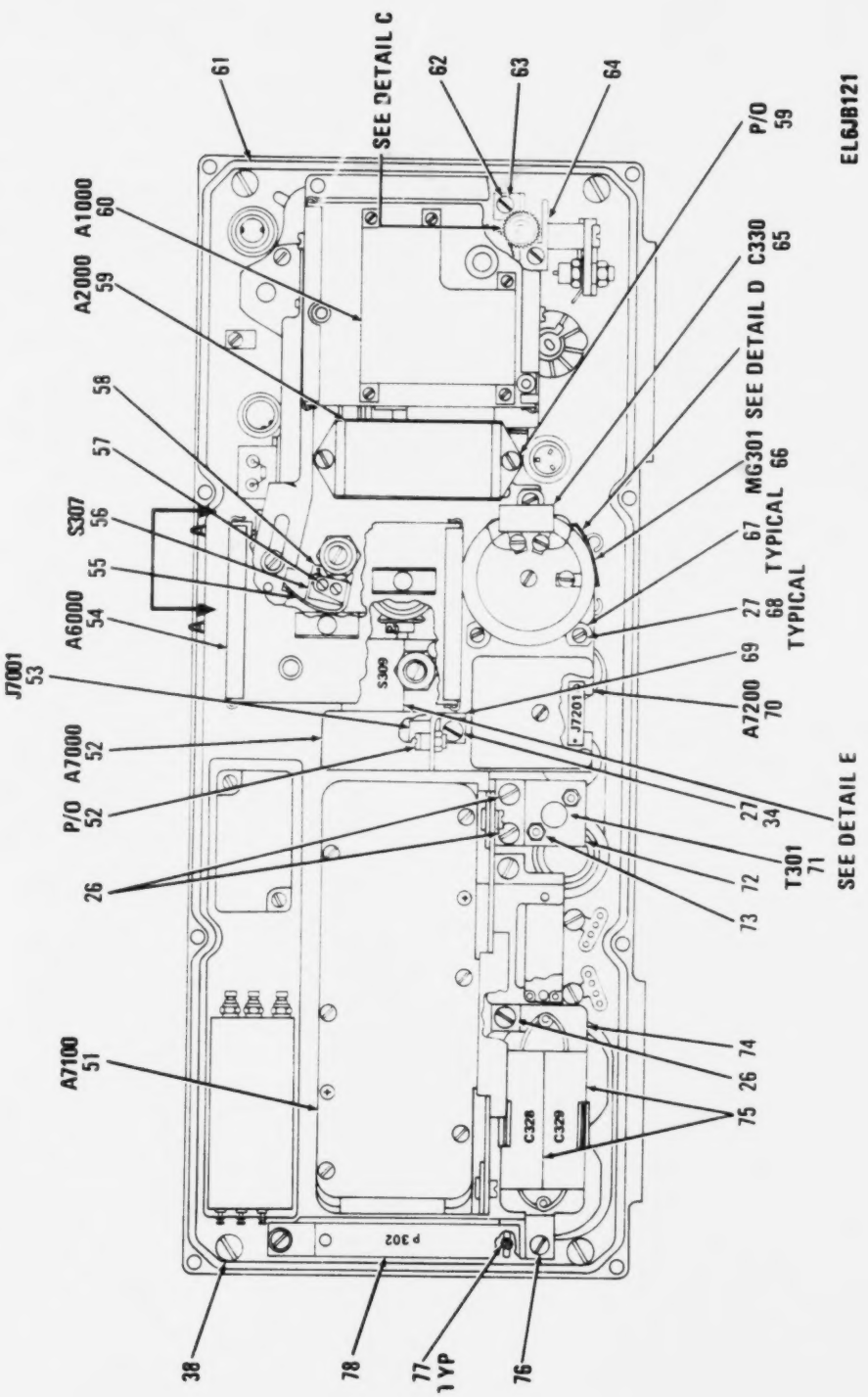

Figure 2. Control Assembly, Front Panel (Sheet 3 of 7).

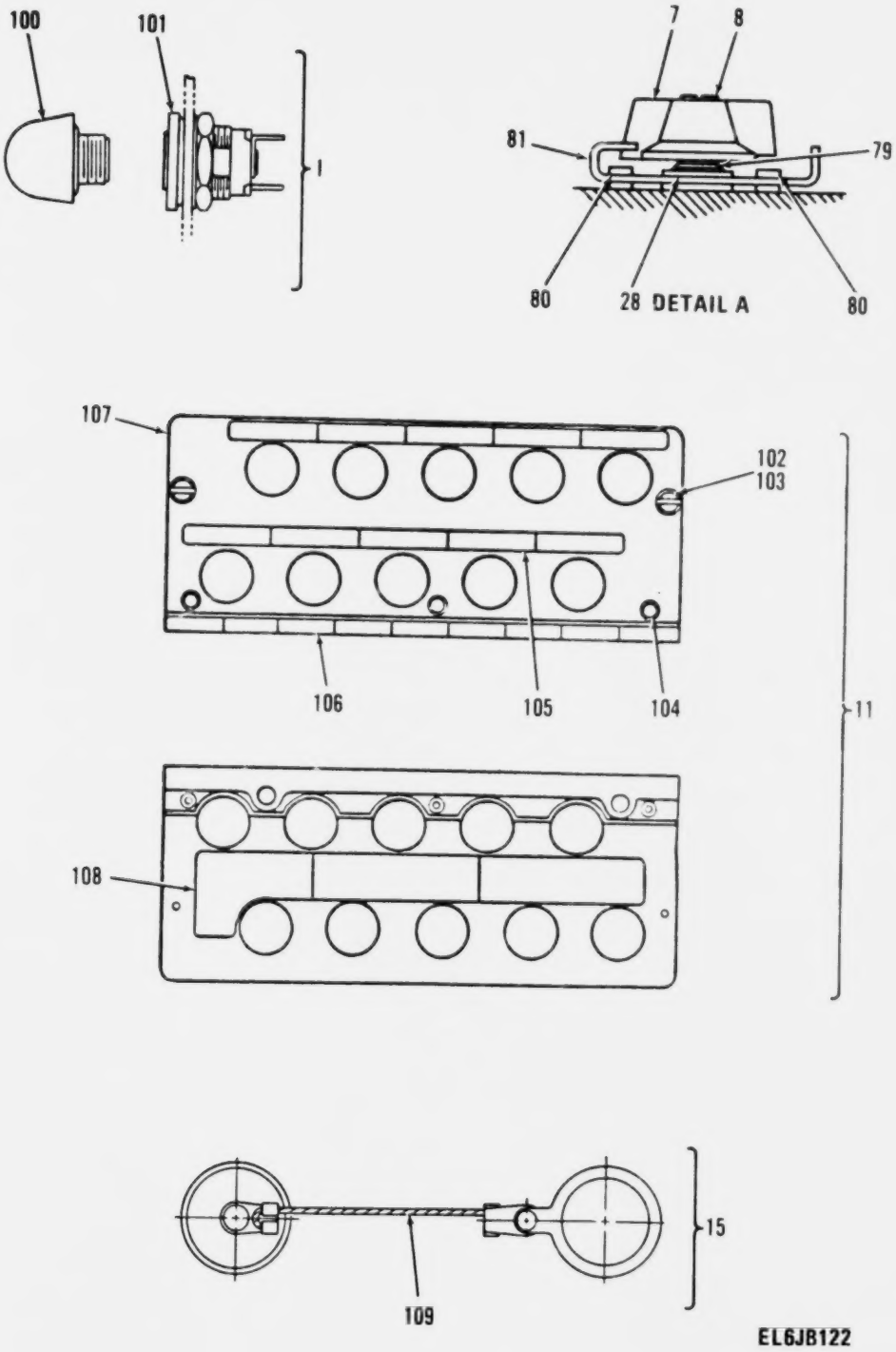

Figure 2. Control Assembly, Front Panel (Sheet 4 of 7).

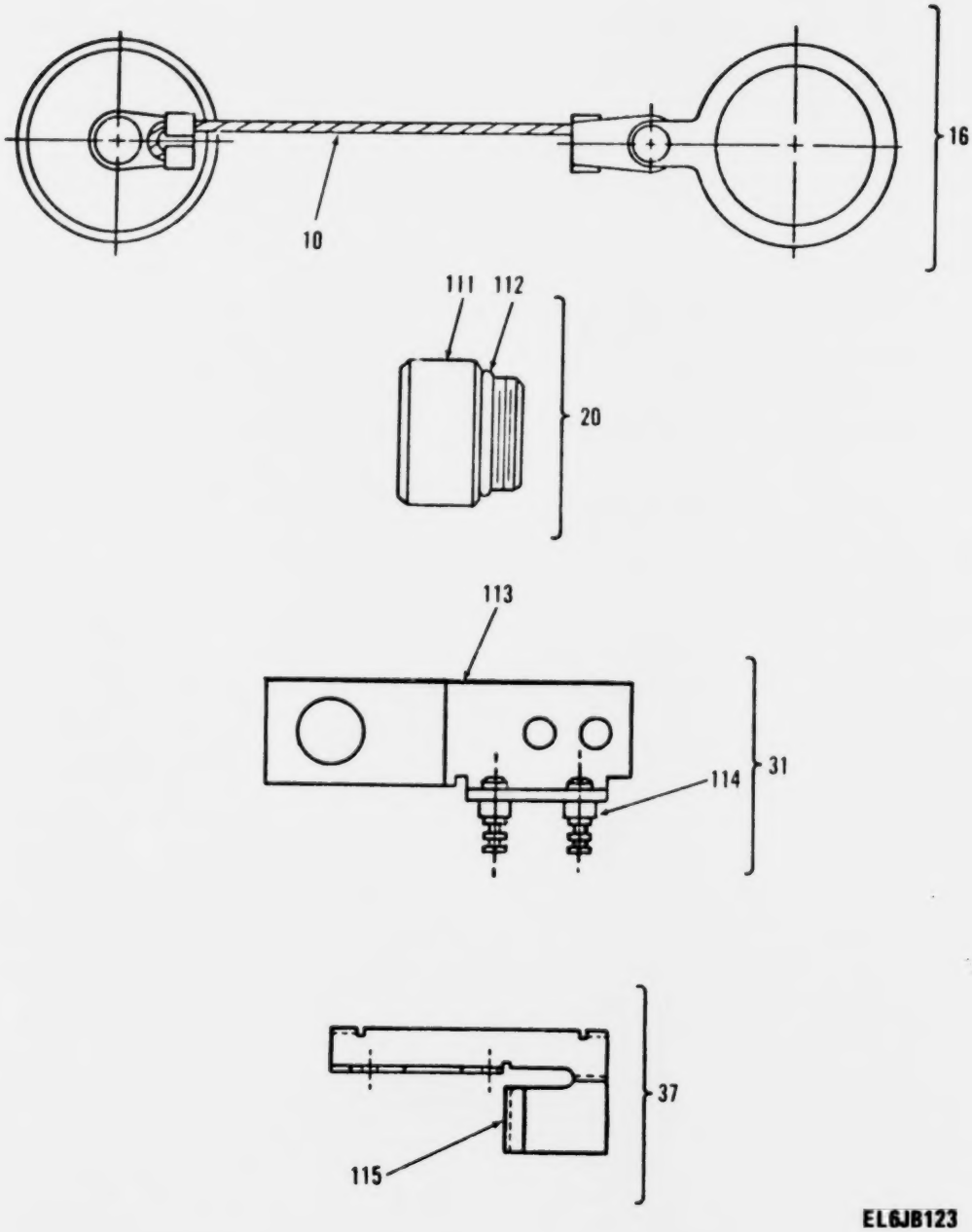

Figure 2. Control Assembly, Front Panel (Sheet 5 of 7).

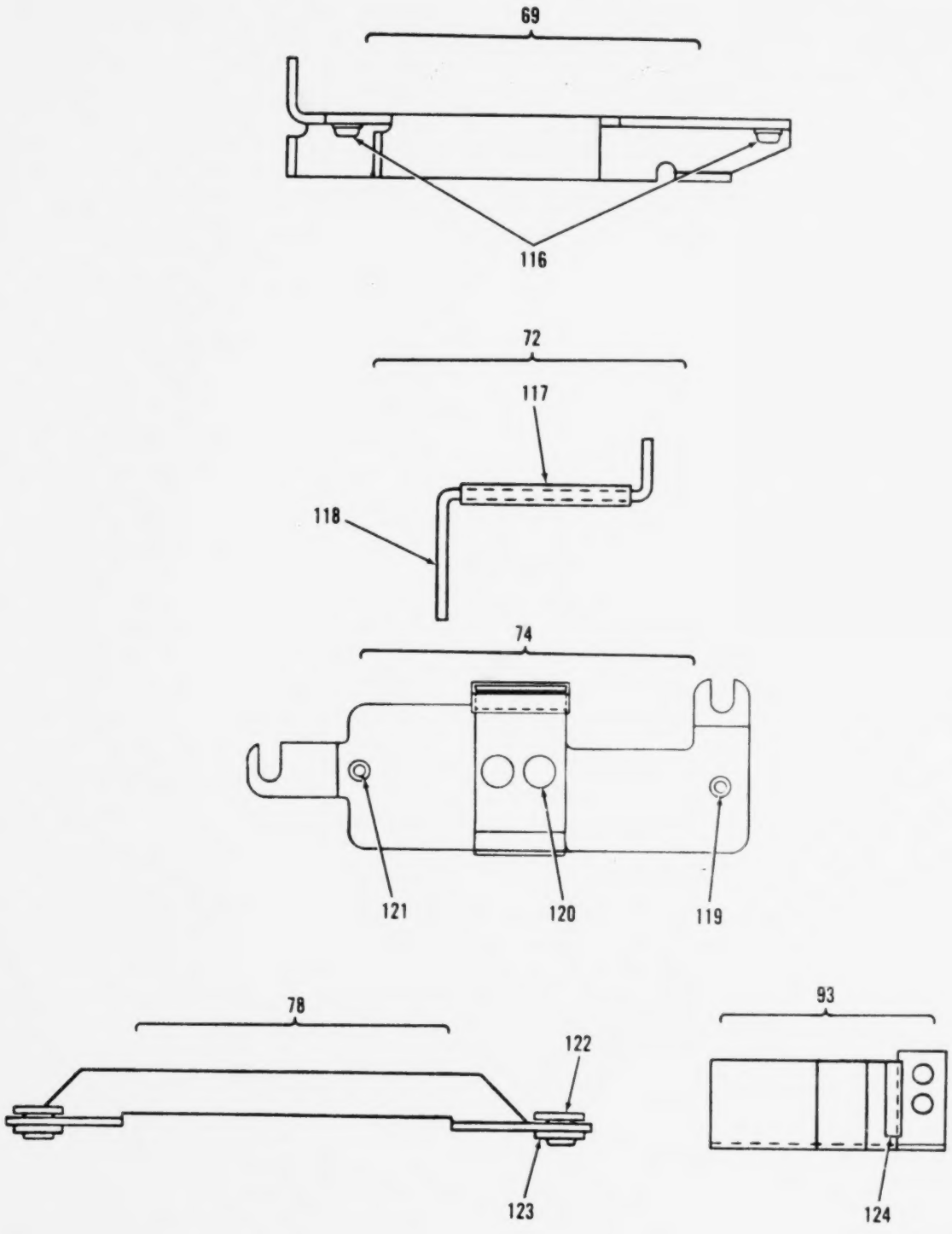

Figure 2. Control Assembly, Front Panel (Sheet 6 of 7).

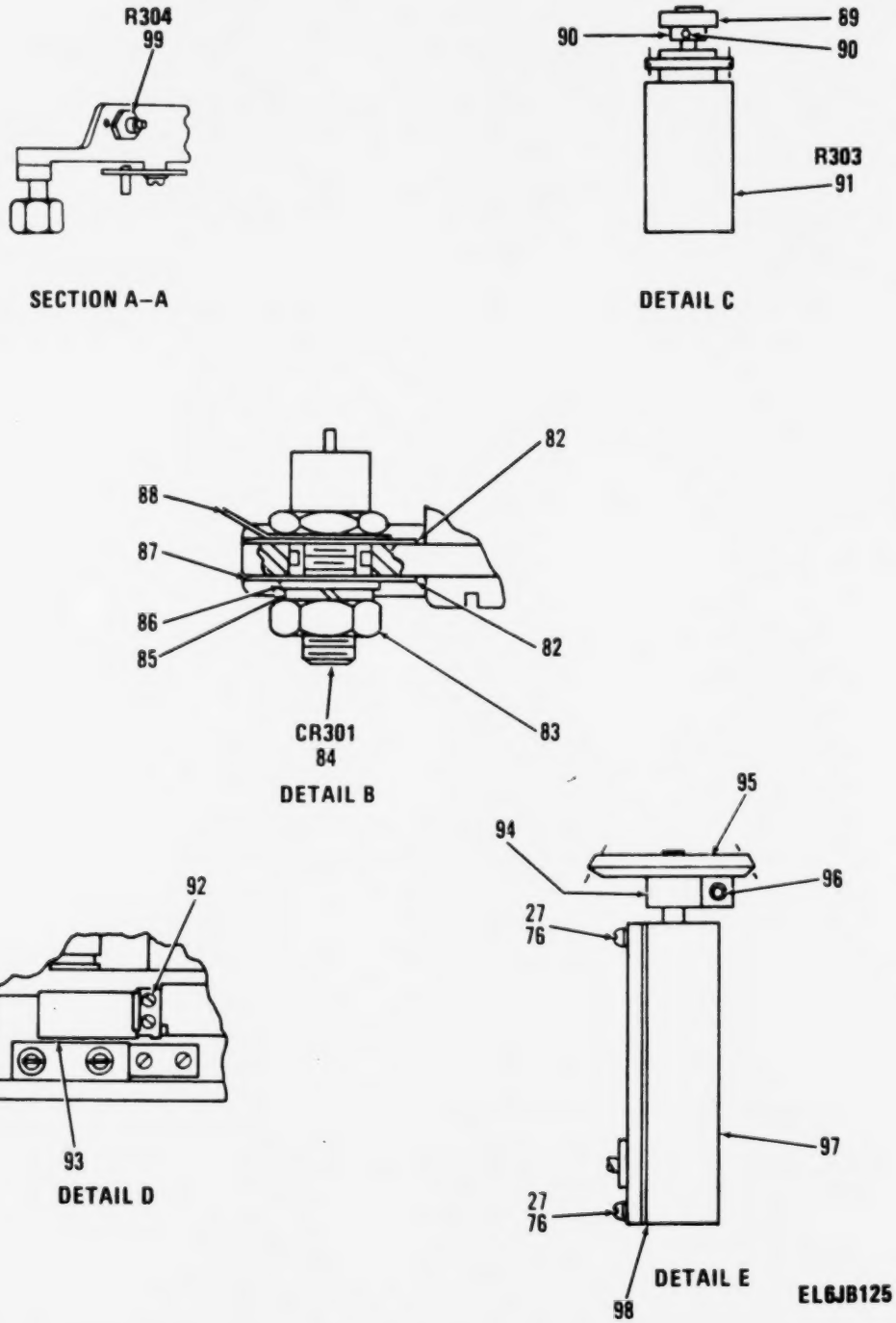

Figure 2. Control Assembly, Front Panel (Sheet 7 of 7).

(1) ILLUSTRATION (a) FIG NO	(b) ITEM NO	(2) SMR CODE	(3) NATIONAL STOCK NUMBER	(4) FSCM	(5) PART NUMBER	(6) DESCRIPTION / USABLE ON CODE		
						GROUP 0101 CONTROL ASSY (FRONT PANEL		
						GROUP A300 SM-D-414300		
2	1	PAFZZ	6210-00-435-4780	80063	SM-C-374827-1	LIGHT,INDICATOR	EA	1
2	2	PAOZZ	6240-00-155-7836	96906	MS25237-327	LAMP,INCANDESCENT	EA	2
2	3	PAOZZ	5355-00-059-9188	80063	SM-C-414401	KNOB	EA	1
2	4	PAFZZ	5310-00-158-5131	80063	SM-B-414394	WASHER,KEY	EA	1
2	5	PAOZZ	5310-00-853-9676	83512	S7892	NUT,SLEEVE	EA	1
2	6	PAOZZ	5355-00-853-6353	80063	SM-C-414393	KNOB	EA	1
2	7	PAOZZ	5355-00-616-9659	96906	MS91525-1	KNOB	EA	1
2	8	PAOZZ		03038	LP35223-27	SCREW,SELF-LOCKIN	EA	4
2	9	PAFZZ	5935-00-760-3219	80063	SM-C-374877	NUT,BUSHING RETAIN	EA	1
2	10	ADOOD		80063	SM-D-414496	PNL-HSG ASSY	EA	1
2	11	AHHHH		80063	SM-C-414793	DOOR ASSY	EA	1
2	12	PAFZZ	5305-00-889-3001	96906	MS35206-231	SCREW,MACHINE	EA	4
2	13	PAFZZ	5305-00-957-6265	96906	MS35190-234	SCREW,MACHINE	EA	2
2	14	PAFFF	5935-00-823-0765	77820	72-344092-10P	DUMMY CONNECTOR,PLU 10 PIN TYPE CONTACTS	EA	1
2	15	PAOZZ	5935-00-990-5580	96906	MS3181-14N	COVER,ELECTRICAL CO	EA	1
2	16	PAFFF	5935-00-823-0752	80063	SM-C-414381	COVER,ELECTRICAL CO	EA	1
2	17	PAOZZ	5355-00-853-6384	80063	SM-C-414399	KNOB	EA	1
2	18	PAFZZ	5310-00-158-5130	80063	SM-B-414400	WASHER,KEY	EA	1
2	19	PAOZZ	5305-01-126-7312	03038	LP35223-29	SCREW,SELF-LOCKING	EA	1
2	20	PAOZZ	5820-00-859-2585	80063	SM-B-414407	CAP	EA	1
2	21	PAFZZ	5985-00-892-3200	80063	SM-D-414384	SWITCH,RADIO FREQUE 30 TO 76 MHZ OPR FREQ 18 TO 30 VDC,175 MILLIA OPR CUR	EA	1
2	22	PAFZZ	5305-00-984-4978	96906	MS35206-221	SCREW,MACHINE	EA	2
2	23	PAFZZ	5915-00-871-5016	80063	SM-D-414385	NETWORK,PHASE CHANG MINUS 125 DEG PORM 3 DEG PHASE SHIFT AT 30 VRMS,400 HZ	EA	1
2	24	PAFZZ	5940-00-082-4922	81349	SE18XE01	TERMINAL,STUD	EA	5
2	25	PAFZZ	5930-01-011-3169	80063	SM-D-414396	SWITCH,ROTARY 1 SECTION,SPTT,3 POSITION,NON SHORTING TYPE CONTACTS	EA	1
2	26	PAFZZ	5305-00-984-4984	96906	MS35206-227	SCREW,MACHINE	EA	2
2	27	PAFZZ	5310-00-045-4007	96906	MS35338-41	WASHER,LOCK	EA	3
2	28	PAFZZ	5310-00-883-5931	96214	410894-38	WASHER,LOCK	EA	1
2	29	PAFZZ	5925-00-118-1098	81541	AP2-14	CIRCUIT BREAKER 50 VDC,.113 OHM PORM 10 PCT SERIES RES AT 25 DEG C,3 AMP CUR	EA	1
2	30	PAFZZ	5961-00-087-6047	81349	JAN1N645	SEMICONDUCTOR DEVIC	EA	1
2	31	XBFZZ		80063	SM-B-414404	BRACKET ASSY	EA	1
2	32	XBHZZ		80063	SM-B-413964-2	STRAP	EA	1
2	33	PAFZZ	5930-00-853-5936	81349	SR20F3682MGO	SWITCH,ROTARY 1 SECTION,SPDT,SHORTING TYPE CONTACTS,2 POSITION	EA	1
2	34	PAHZZ	5305-00-984-4983	96906	MS24584-23	SCREW,MACHINE	EA	2
2	35	PAHZZ	5305-00-558-4889	96906	MS35223-14	SCREW,MACHINE	EA	2

(1) ILLUSTRATION (a) FIG NO	(b) ITEM NO	(2) SMR CODE	(3) NATIONAL STOCK NUMBER	(4) FSCM	(5) PART NUMBER	(6) DESCRIPTION USABLE ON CODE	U/M	S
2	36	PAHZZ	5310-00-543-2410	96906	MS35338-40	WASHER,LOCK	EA	2
2	37	PAHHH		80063	SM-B-414417	BRACKET ASSY	EA	1
2	38	PAFZZ	5305-00-984-4988	96906	MS35206-228	SCREW,MACHINE	EA	2
2	39	PAFZZ	5340-00-852-7297	71616	CPC-1953-68	CLAMP,LOOP	EA	1
2	40	PAFZZ	5305-00-984-4989	96906	MS35206-229	SCREW,MACHINE	EA	1
2	41	PAFZZ	5310-00-167-0834	88044	AN960-10L	WASHER,FLAT	EA	1
2	42	PAFZZ	5310-00-818-5424	72962	96NM107-62	NUT,SELF-LOCKING,ME	EA	1
2	43	ADDDD		80063	SM-E-414411	CONTROL WIRING ASSY	EA	1
2	44	PAHZZ	5945-00-823-2606	80063	SM-D-414402	SOLENOID,ELECTRICAL 22 TO 30 VDCW,5 S ON,55 S OFF,1.8 LB LOAD AND .125 IN TRAVEL	EA	1
2	45	PAFZZ	5340-00-782-8737	80205	NAS1397P4N	CLAMP,LOOP	EA	1
2	46	PAFZZ	5905-00-853-6516	01121	GWE-6166A	RESISTOR,VARIABLE,N 1100 OHMS MAX,1/4 WATT POWER RATING,S TAPER	EA	1
2	47	PAFZZ	5961-00-577-6214	81349	JAN1N538	SEMICONDUCTOR DEVIC	EA	1
2	48	PAFZZ	5925-00-823-2615	81541	AP2-18	CIRCUIT BREAKER .0062 OHM,PURM 20 PCT SERIES RES AT 25 DEG C,15.0 AMP CUR RAT	EA	1
2	49	XBFZZ		80063	SM-B-414387	BRACKET	EA	1
2	50	PAHZZ	5310-00-939-0903	96906	MS35335-86	WASHER,LOCK	EA	3
2	51	PAFDD	5820-00-884-2492	80063	SM-C-414649	SELECTOR CONTROL SU	EA	1
2	52	PAFDL	5820-00-884-2498	80063	SM-C-414770	RECEIVER-TRANSMITTE	EA	1
2	53	PAFZA	5935-00-800-0813	95238	SM11-205-60	CONNECTOR,RECEPTACL 11 SOCKET TYPE CONTACTS	EA	1
2	54	AFFDA		80063	SM-D-416342	DSC-BUFFER ASSY	EA	1
2	55	PAFZZ	5930-00-823-0764	91929	JX-46	ADAPTER,SWITCH ACTU	EA	1
2	56	PAHZZ	5930-00-803-4570	96906	MS24547-1	SWITCH,SENSITIVE	EA	1
2	57	PAHZZ	5305-00-989-0682	96906	MS35206-205	SCREW,MACHINE	EA	2
2	58	PAHZZ	5970-00-089-8568	80063	SM-B-414380	INSULATOR,PLATE CODE 88301	EA	1
2	59	PAFDL	5820-00-853-5915	80063	SM-D-414430	OSCILLATOR,RADIO FR	EA	1
2	60	AFFDA		80063	SM-D-416345	TUNER,RADIO FREQUEN	EA	1
2	61	PAFZZ	5330-00-856-4754	80063	SM-C-414114-4	PACKING,PREFORMED	EA	1
2	62	PAHZZ		80063	SM-B-414786	PLATE ASSEMBLY	EA	1
2	63	PAHZZ	5305-00-889-2997	96906	MS35206-215	SCREW,MACHINE	EA	2
2	64	XBHZZ		80063	SM-C-374807	SHIELD,GEAR	EA	1
2	65	PAFZZ	5910-00-050-8126	99515	EP-60-10	CAPACITOR 0.5UF,PURM 5 PCT,50 VDCW	EA	1
2	66	PAFZZ	6105-00-823-2604	80740	1018-112-011	MOTOR-TACHOMETER GE 115 VRMS,400 HZ,10000 RPM MIN,6.0 WATT MAX INPUT POWER	EA	1
2	67	PAFZZ	5340-00-729-6763	00141	L2-2	SPACER,SLEEVE	EA	3
2	68	PAFZZ	5305-00-145-2127	80063	SM-B-374854	SCREW,CAP,SOCKET HE	EA	3
2	69	XBHZZ		80063	SM-B-416646	BRACKET ASSY	EA	1
2	70	PAFDL	5990-01-015-7586	80063	SM-D-414741	AMPLIFIER,SYNCHRO S	EA	1
2	71	PAFZZ	5950-00-823-3239	97315	BC4519	TRANSFORMER,POWER 400 HZ INPUT	EA	1
2	72	XBFFF		80063	SM-B-414708	BRACKET ASSY	EA	1
2	73	PAFZZ	5310-00-582-9176	30655	F92-1660-40	NUT,SELF-LOCKING,HE	EA	2

(1) ILLUSTRATION (a) FIG NO	(b) ITEM NO	(2) SMR CODE	(3) NATIONAL STOCK NUMBER	(4) FSCM	(5) PART NUMBER	(6) DESCRIPTION USABLE ON CODE	(7) U/M	(8) QTY INC IN UNIT
2	74	PAHHH	5940-00-089-1134	80063	SM-B-414801	TERMINAL BOARD	EA	1
2	75	PAFZZ	5910-00-267-1753	81349	M39022/01-1681	CAPACITOR,FIXED,MET	EA	2
2	76	PAHZZ	5305-00-889-3000	96906	MS35206-230	SCREW,MACHINE	EA	1
2	77	PAHZZ	5310-00-616-3554	96906	MS35335-29	WASHER,LOCK	EA	3
2	78	XBHZZ		80063	SM-C-414735	BRACKET ASSY	EA	1
2	79	PAHZZ	5310-00-137-3419	80063	SM-B-414389	NUT,PLAIN,SQUARE	EA	1
2	83	PAHZZ	5307-00-169-5020	80063	SM-B-414391	STUD,SELF-LOCKING	EA	2
2	81	PAFZZ	5355-00-874-3594	80063	SM-C-414388	STOP,ELECTRICAL SWI	EA	1
2	82	PAFZZ	5310-01-127-1408	03877	HP35W-1C-4	WASHER,FLAT	EA	2
2	83	PAFZZ	5310-00-934-9751	96906	MS35650-302	NUT,PLAIN,HEXAGON	EA	1
2	84	PAFZZ	5961-00-935-0138	81349	JANIN1202A	SEMICONDUCTOR DEVIC	EA	1
2	85	PAFZZ	5310-00-045-3296	96906	MS35338-43	WASHER,LOCK	EA	1
2	86	PAFZZ	5310-00-167-0834	88044	AN960-10L	WASHER,FLAT	EA	1
2	87	PAFZZ		03877	HP35W-1C-5	WASHER,FLAT	EA	1
2	88	PAHZZ	5940-00-681-8184	96906	MS0035431-8	TERMINAL,LUG	EA	1
2	89	PAHHH	3020-00-884-2468	80063	SM-B-414766	GEAR,SPUR	EA	1
2	90	PAHZZ	5305-00-336-2152	88044	AN565D4H2	SETSCREW	EA	2
2	91	PAFZZ	5905-00-892-6543	65092	341124	RESISTOR,VARIABLE,W 10200 OHMS MAX,TEMP COEF MINUS 15 PLUS 75 PPM/DEG C,1 WATT	EA	1
2	92	PAFZZ	5305-00-558-4887	96906	MS35265-14	SCREW,MACHINE	EA	2
2	93	XBFZZ		80063	SM-B-414808	CLAMP ASSY	EA	1
2	94	PAHZZ	3040-00-884-2483	80063	SM-C-414373	CLAMP,HUB	EA	1
2	95	PAHZZ	3020-00-884-2467	80063	SM-C-414372	GEAR,BEVEL	EA	1
2	96	PAHZZ	5305-00-139-7093	80063	SM-C-413900-1	SCREW,CAP,SOCKET HE	EA	1
2	97	PAHHH	5930-00-876-2353	80063	SM-D-414832	SWITCH ASSEMBLY	EA	1
2	98	XBHZZ		80063	SM-C-376815	SHIM	EA	1
2	99	PAFZZ	5905-00-552-5490	81349	RV6LAY5A252A	RESISTOR,VARIABLE,N	EA	1
2	100	PADZZ	6210-00-183-0513	81349	LC35YT2	LENS,LIGHT	EA	1
2	101	PAFZZ	6210-00-176-4928	81349	LM89/1	LIGHT,INDICATOR	EA	1
2	102	PAHZZ	5305-00-823-5834	80063	SM-B-414796	SCREW,EXTERNALLY RE	EA	2
2	103	XBHZZ		80063	SM-B-414797	SHIM	EA	2
2	104	PAHZZ	5320-00-205-7930	96906	MS20450C8AD6	RIVET,TUBULAR	EA	3
2	105	PAFZZ		80063	SM-B-414795	PLATE,MARKING,BLANK	EA	2
2	106	PAHZZ		80063	SM-D-414800	HINGE,ACCESS DOOR	EA	1
2	107	PAHZZ		80063	SM-D-414799	DOOR,ACCESS	EA	1
2	108	PAFZZ	9905-00-884-2496	80063	SM-D-414798	PLATE,INSTRUCTION	EA	1
2	109	PAFZZ	4010-00-221-9445	80063	SM-B-283567	WIRE ROPE ASSEMBLY	EA	1
2	110	PAFZZ	4010-00-221-9445	80063	SM-B-283567	WIRE ROPE ASSEMBLY	EA	1
2	111	PADZZ	5975-00-241-5146	80063	SM-C-414409	CAP,END SEAL,ELECTR	EA	1
2	112	PADZZ	5330-00-584-0265	96906	MS28775-012	PACKING,PREFORMED	EA	1

(1) ILLUSTRATION (a) FIG NO	(1) ILLUSTRATION (b) ITEM NO	(2) SMR CODE	(3) NATIONAL STOCK NUMBER	(4) FSCM	(5) PART NUMBER	(6) DESCRIPTION / USABLE ON CODE		
2	113	XBFZZ		80063	SM-C-414406	BRACKET	EA	1
2	114	PAFZZ	5940-00-051-6257	81349	SE079801	TERMINAL,STUD	EA	2
2	115	XBHZZ		80063	SM-B-414397	BUMPER	EA	1
2	116	PAHZZ	5310-01-057-8778	30655	22NCFNA2-40	NUT,SELF-LOCKING SP	EA	2
2	117	XBFZZ		80063	SM-B-414659	BUMPER	EA	1
2	118	XBFZZ		80063	SM-C-414376	BRACKET	EA	1
2	119	PAHZZ	5940-00-821-6373	98291	RSTSMLTURBLUE	TERMINAL,STUD	EA	1
2	120	PAHZZ	5320-00-850-2273	96906	MS16535-152	RIVET,TUBULAR	EA	2
2	121	PAHZZ	5940-00-553-2471	98291	RST-SM-1 TUR	TERMINAL,STUD	EA	1
2	122	XAHZZ		80063	SM-B-414739	BUSHING,SLEEVE	EA	2
2	123	PAHZZ	5310-00-158-5129	80063	SM-B-414738	WASHER,FLAT	EA	2
2	124	XBFZZ		80063	SM-B-414819	BUMPER	EA	1

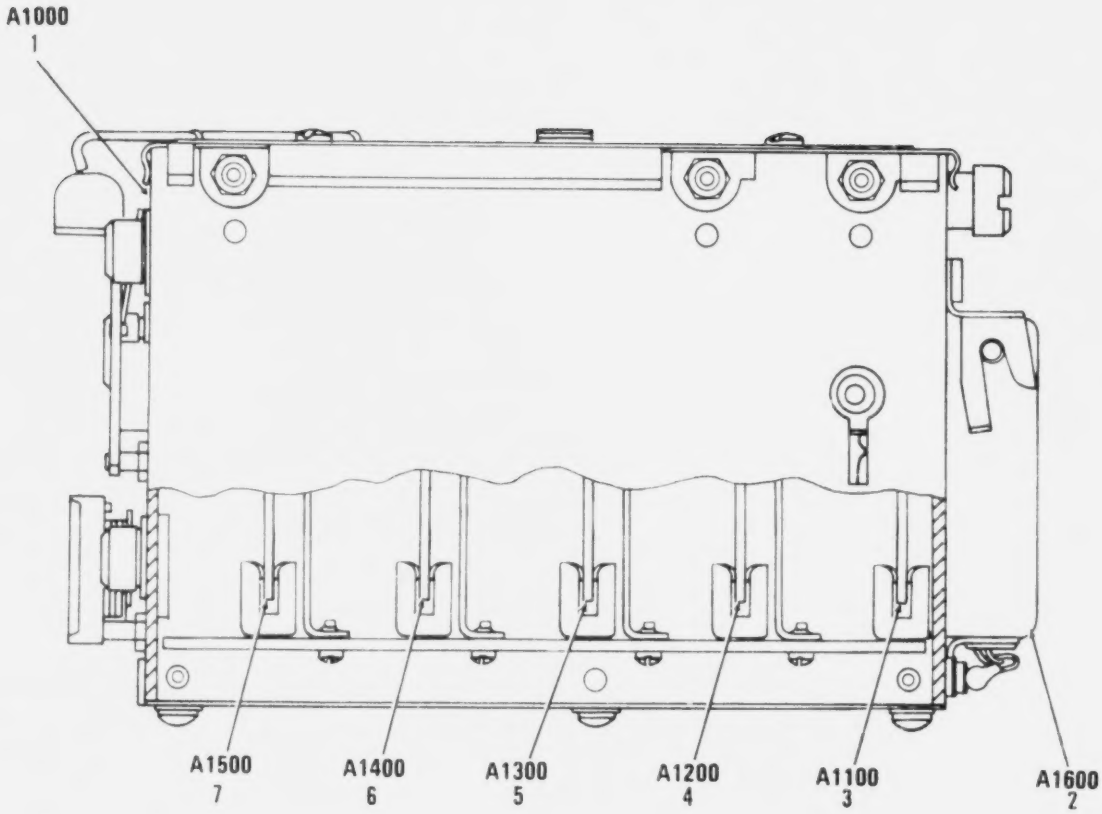

Figure 3. Tuner, Radio Frequency.

(1) ILLUSTRATION (a) FIG NO	(1) ILLUSTRATION (b) ITEM NO	(2) SMR CODE	(3) NATIONAL STOCK NUMBER	(4) FSCM	(5) PART NUMBER	(6) DESCRIPTION / USABLE ON CODE	(7) U/M	(8) QTY INC IN UNIT
						GROUP 010101 TUNER,RADIO FREQUENCY		
						A1000 SM-D-416345		
3	1	PAFHH	5820-00-087-0061	80063	SM-D-188980	RECEIVER SUBASSEMBL.....	EA	1
3	2	PAFDD	5820-00-858-6476	80063	SM-C-416316	POWER SUPPLY.....	EA	1
3	3	PAFDD		80063	SM-D-374989	TUNER,RADIO FREQUEN.....	EA	1
3	4	PAFDD	5820-00-853-5916	80063	SC-DL-416397	MIXER STAGE,FREQUEN.....	EA	1
3	5	PAFZZ	5820-00-853-5918	80063	SM-D-374990	AMPLIFIER,RADIO FRE.....	EA	1
3	6	PAFDD	5820-00-853-5917	80063	SM-D-416370	AMPLIFIER,RADIO FRE.....	EA	1
3	7	PAFDD		80063	SM-D-374983	CIRCUIT CARD ASSEMB.....	EA	1

LEGEND

REF DES	ITEM NO	REF DES	ITEM NO	REF DES	ITEM NO	REF DES	ITEM NO
C1101	1	C1105	4	L1101	7	R1101	9
C1102	2	C1106	5	L1102	7	S1101	10
C1103	3	J1001	6	L1103	8	VR1101	11
C1104	1						

PREFIX ALL REFERENCE DESIGNATIONS WITH A1000A1100

EL6JB128

Figure 4. Circuit Card Assembly, Antenna Board Assembly (Sheet 1 of 3).

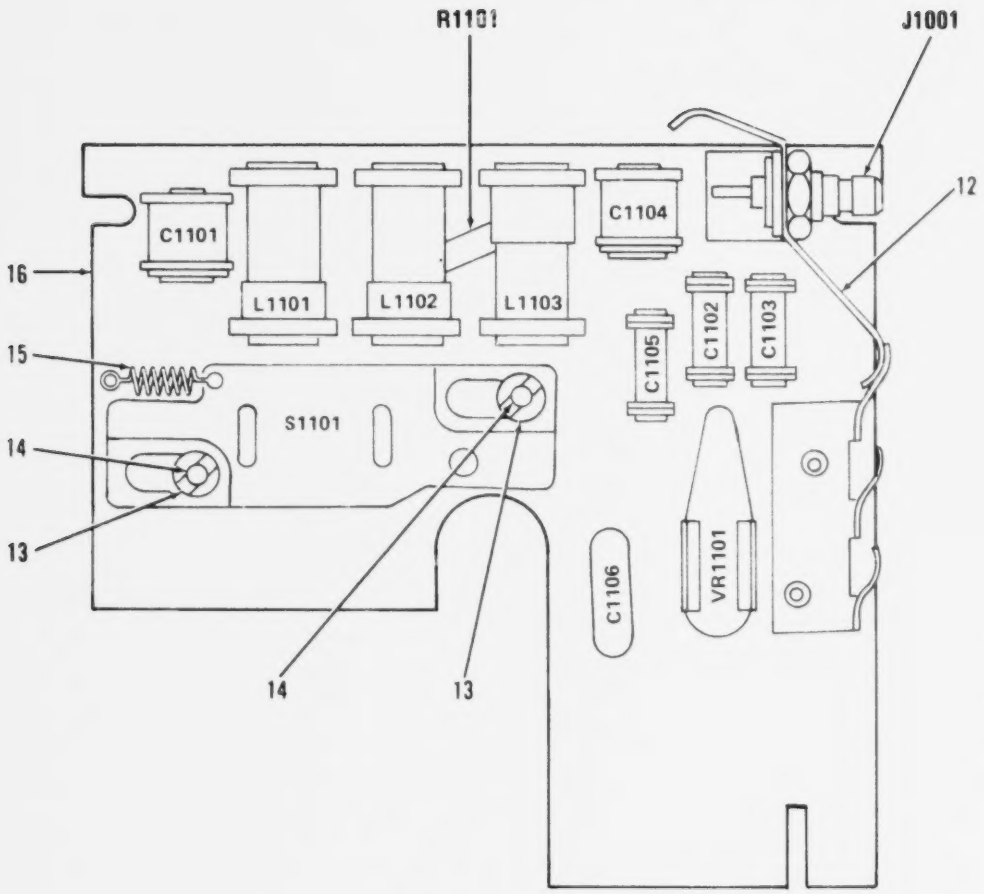

PREFIX ALL REFERENCE DESIGNATIONS WITH A1000A1100

EL6JB129

Figure 4. Circuit Card Assembly, Antenna Board Assembly (Sheet 2 of 3).

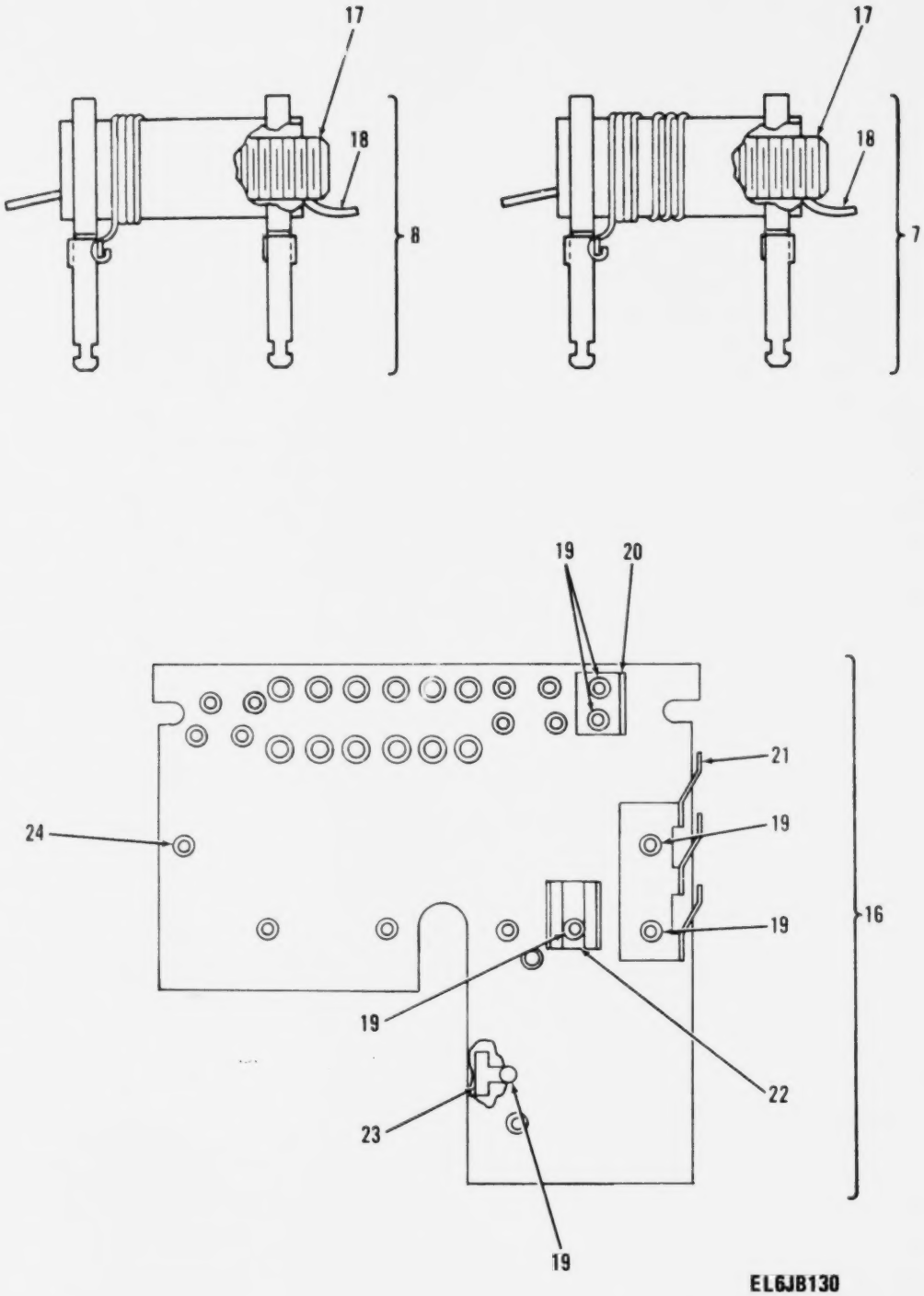

Figure 4. Circuit Card Assembly, Antenna Board Assembly (Sheet 3 of 3).

(1) ILLUSTRATION (a) FIG NO	(1) ILLUSTRATION (b) ITEM NO	(2) SMR CODE	(3) NATIONAL STOCK NUMBER	(4) FSCM	(5) PART NUMBER	(6) DESCRIPTION / USABLE ON CODE	(7) U M	(8) QTY INC IN UNIT
						GROUP 01010101 CIRCUIT CARD ASSEMBLY		
						(ANTENNA BD ASSY)		
						A1100 SM-D-374983		
4	1	PADZZ	5910-00-924-4307	81349	PC51J5R5	CAPACITOR,VARIABLE.....	EA	2
4	2	PADZZ	5910-00-990-6806	72982	301-011-P3X0-309 C	CAPACITOR,FIXED,CER 3 UUF,PORM .25 UUF,N1500 TEMP COEF.....	EA	1
4	3	PADZZ	5910-00-990-6808	72982	301-011-P3X0-409 C	CAPACITOR,FIXED,CER 4 UUF,PORM .25 UUF,N1500 TEMP COEF.....	EA	1
4	4	PADZZ	5910-00-583-1589	81349	CC20CH040C	CAPACITOR,FIXED,CER.....	EA	1
4	5	PADZZ	5910-01-030-1770	81349	CMR05F151GODR	CAPACITOR,FIXED,MIC.....	EA	1
4	6	PADZA		02660	27-3	CONNECTOR,RECEPTACL.....	EA	1
4	7	PADZZ	5950-01-126-2909	80063	SM-C-416321-1	COIL,RADIO FREQUENC .200 UH MIN,.270 UH MAX INDUCTANCE AT 25 MHZ.....	EA	2
4	8	PADZZ	5950-01-011-3203	80063	SM-C-416327-1	CO ,RADIO FREQUENC .75 UH MIN,1.15 UH MAX INDUCTANCE AT 25 MHZ.....	EA	1
4	9	PADZZ	5905-00-106-1278	81349	RCR07G123JS	RESISTOR,FIXED,COMP.....	EA	1
4	10	PADZA	5821-00-990-6461	80063	SM-C-416300	SWITCH SUBASSEMBLY.....	EA	1
4	11	PADZZ	6240-00-844-9676	89730	NE-2X	LAMP,GLOW.....	EA	1
4	12	XDDZA		80063	SM-B-481758	CONTACT.....	EA	1
4	13	PADZZ		80063	SM-B-416361	INSERT SCREW THREAD.....	EA	2
4	14	PADZZ	5305-00-137-7929	80063	SM-B-416363	SCREW,SELF-LOCKING.....	EA	2
4	15	XDDZZ		80063	SM-B-481749	SPRING,HELICAL.....	EA	1
4	16	XADDA		80063	SM-D-374982	ANTENNA BOARD ASSY.....	EA	1
4	17	PAFZZ	5953-00-904-1057	71279	3226-3	CORE,ADJUSTABLE TUN.....	EA	1
4	18	PAFZZ		80063	SM-B-481760	PLASTIC STRIP.....	EA	1
4	19	PADZZ	5320-00-081-7418	96906	MS16535-12	RIVET,TUBULAR.....	EA	2
4	20	XDDZZ		80063	SM-B-416356-1	BRACKET.....	EA	1
4	21	XDDZA		80063	SM-C-374867	CONTACT.....	EA	1
4	22	PADZZ	5340-00-056-9942	96906	MS17160-4	CLIP,SPRING TENSION.....	EA	1
4	23	XDDZA		80063	SM-C-416369-1	CONTACT.....	EA	1
4	24	XDDZZ		71279	3653-2-01	TERMINAL,STUD.....	EA	1

LEGEND

REF DES	ITEM NO	REF DES	ITEM NO	REF DES	ITEM NO	REF DES	ITEM NO
C1201	1	C1206	5	L1202	8	R1203	13
C1202	2	C1207	6	L1203	9	R1204	14
C1203	3	C1208	7	L1204	10	R1205	15
C1204	4	C1209	7	R1201	11	S1201	16
C1205	1	L1201	8	R1202	12	V1201	17

PREFIX ALL REFERENCE DESIGNATIONS WITH A1000A1200

EL6JB131

Figure 5. Circuit Card Assembly, 1st. RF Board Assembly (Sheet 1 of 3).

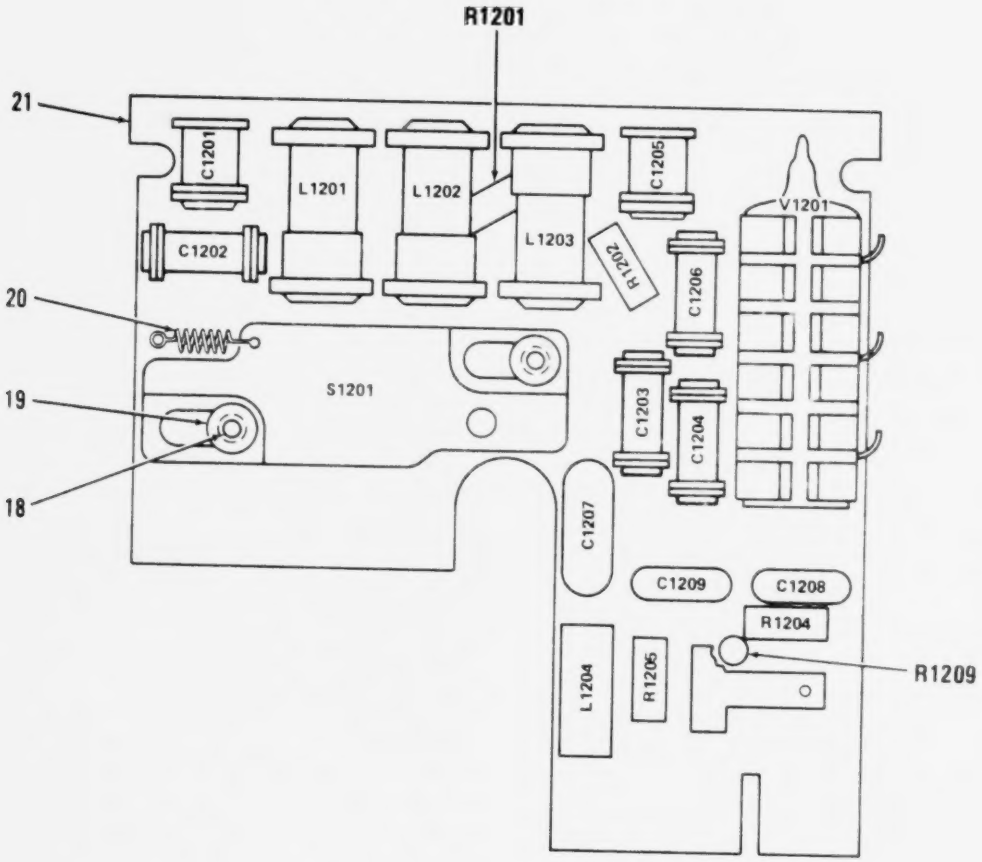

PREFIX ALL REFERENCE DESIGNATIONS WITH A1000A1200 **EL6JB132**

Figure 5. Circuit Card ASsembly, 1st. RF Board Assembly (Sheet 2 of 3).

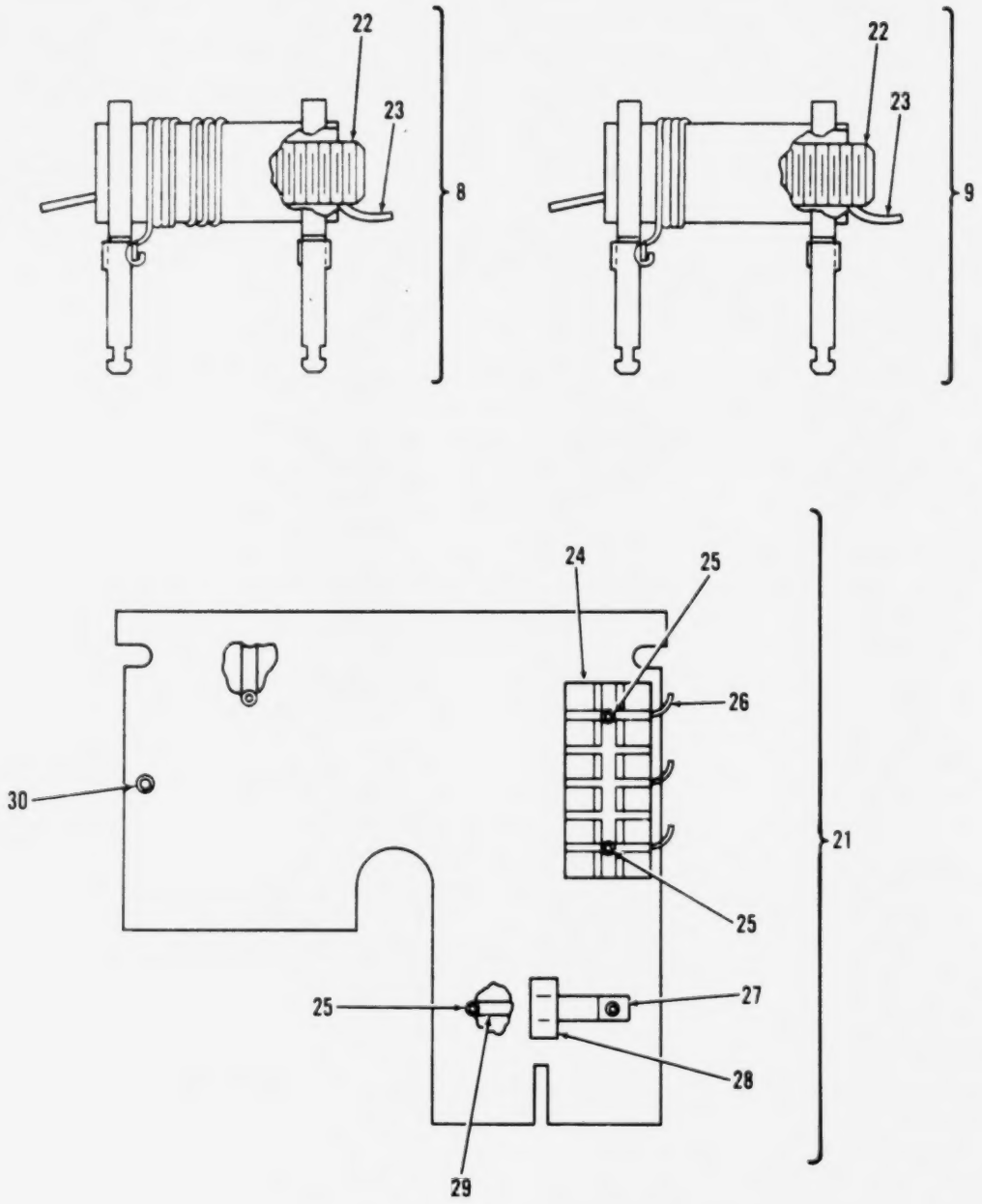

Figure 5. Circuit Card Assembly, 1st. RF Board Assembly (Sheet 3 of 3).

(1) ILLUSTRATION (a) FIG NO	(1) ILLUSTRATION (b) ITEM NO	(2) SMR CODE	(3) NATIONAL STOCK NUMBER	(4) FSCM	(5) PART NUMBER	(6) DESCRIPTION / USABLE ON CODE	(7) U M	(8) QTY INC IN UNIT
						GROUP 01010102 CIRCUIT CARD ASSEMBLY		
						(1ST RF BD ASSY)		
						A1200 SM-D-416370		
5	1	PADZZ	5910-00-924-4307	81349	PC51J5R5	CAPACITOR,VARIABLE,.....	EA	2
5	2	PADZZ	5910-00-455-3711	72982	301-011S3B0-209G	CAPACITOR,FIXED CER 3 UUF,PORM .25 UUF,N1500 TEMP COEF.....	EA	1
5	3	PADZZ	5910-00-957-5120	72982	301-000C0J0-2298	CAPACITOR,FIXED,CER 2.2 UUF,PORM 0.1 UUF,500 VDCW,NPO TEMP COEF.....	EA	1
5	4	PADZZ	5910-00-455-3728	72982	301-011C0K0109B	CAPACITOR,FIXED,CER 1 UUF,PORM 0.1 UUF,500 VDCW,NPO TEMP COEF.....	EA	1
5	5	PADZZ	5910-00-990-6813	72982	301-011T2H130G	CAPACITOR,FIXED,CER 13 UUF,PORM 2 PCT,500 VDCW,N470 TEMP COEF.....	EA	1
5	6	PADZZ	5910-01-030-1770	81349	CMR05F151G0DR	CAPACITOR,FIXED,MIC.....	EA	1
5	7	PADZZ	5910-00-938-7506	18796	08D1011X5F0 102K	CAPACITOR,FIXED,CER .001 UF,PORM 10 PCT,500 VDCW.....	EA	2
5	8	PADZZ	5950-01-126-2909	80063	SM-C-416321-1	COIL,RADIO FREQUENC .200 UH MIN,.270 UH MAX INDUCTANCE AT 25 MHZ.....	EA	2
5	9	PADZZ	5950-01-011-3203	80063	SM-C-416327-1	COIL,RADIO FREQUENC .75 UH MIN,1.15 UH MAX INDUCTANCE AT 25 MHZ.....	EA	1
5	10	PADZZ		97469	10102-125	COIL,RADIO FREQUENC 12 UH,PORM 3 PCT INDUCTANCE AT 2.5 MHZ..	EA	1
5	11	PADZZ	5905-00-106-1278	81349	RCR07G123JS	RESISTOR,FIXED,COMP.....	EA	1
5	12	PADZZ	5905-00-141-0717	81349	RCR07G473JS	RESISTOR,FIXED,COMP.....	EA	1
5	13	PADZZ	5905-00-116-8554	81349	RCR07G105JS	RESISTOR,FIXED,COMP.....	EA	1
5	14	PADZZ	5905-00-114-0710	81349	RCR07G331JS	RESISTOR,FIXED,COMP.....	EA	1
5	15	PADZZ	5905-00-119-3503	81349	RCR07G271JS	RESISTOR,FIXED,COMP.....	EA	1
5	16	PADZA	5821-00-990-6461	80063	SM-C-416300	SWITCH SUBASSEMBLY.....	EA	1
5	17	PADZZ	5960-00-548-3072	81349	JAN6205	ELECTRON TUBE.....	EA	1
5	18	PADZZ	5305-00-137-7929	80063	SM-B-416363	SCREW,SELF-LOCKING.....	EA	2
5	19	PADZZ		80063	SM-B-416361	INSERT SCREW THREAD.....	EA	2
5	20	XDDZZ		80063	SM-B-481749	SPRING,HELICAL.....	EA	1
5	21	XADDA		80063	SM-D-416371	1ST RF BOARD ASSY.....	EA	1
5	22	PAFZZ	5950-00-904-1057	71279	3226-3	CORE,ADJUSTABLE TUN.....	EA	1
5	23	PAFZZ		80063	SM-B-481760	PLASTIC STRIP.....	EA	1
5	24	PADZZ	5960-00-729-5343	18915	3A-3	SHIELD,ELECTRON TUB.....	EA	1
5	25	PADZZ	5320-00-081-7418	96906	MS16535-12	RIVET,TUBULAR.....	EA	1
5	26	XDDZA		80063	SM-B-416376	CONTACT.....	EA	1
5	27	XDDZZ		80063	SM-B-416374	STAND-OFF.....	EA	1
5	28	XDDZA		80063	SM-B-416373	CONTACT.....	EA	1
5	29	XDDZA		80063	SM-C-416369-2	CONTACT.....	EA	1
5	30	XDDZZ		71279	3653-2-01	TERMINAL,STUD.....	EA	1

LEGEND

REF DES	ITEM NO	REF DES	ITEM NO	REF DES	ITEM NO	REF DES	ITEM NO
CR1301	1	C1306	6	L1302	10	R1303	15
C1301	2	C1307	7	L1303	11	R1304	14
C1302	3	C1308	8	L1304	12	R1305	16
C1303	4	C1309	9	R1301	13	S1301	17
C1304	5	C1310	9	R1302	14	V1301	18
C1305	2	L1301	10				

PREFIX ALL REFERENCE DESIGNATIONS WITH A1000A1300

EL6JB134

Figure 6. Amplifier, Radio Frequency, 2nd. RF Board Assembly (Sheet 1 of 3).

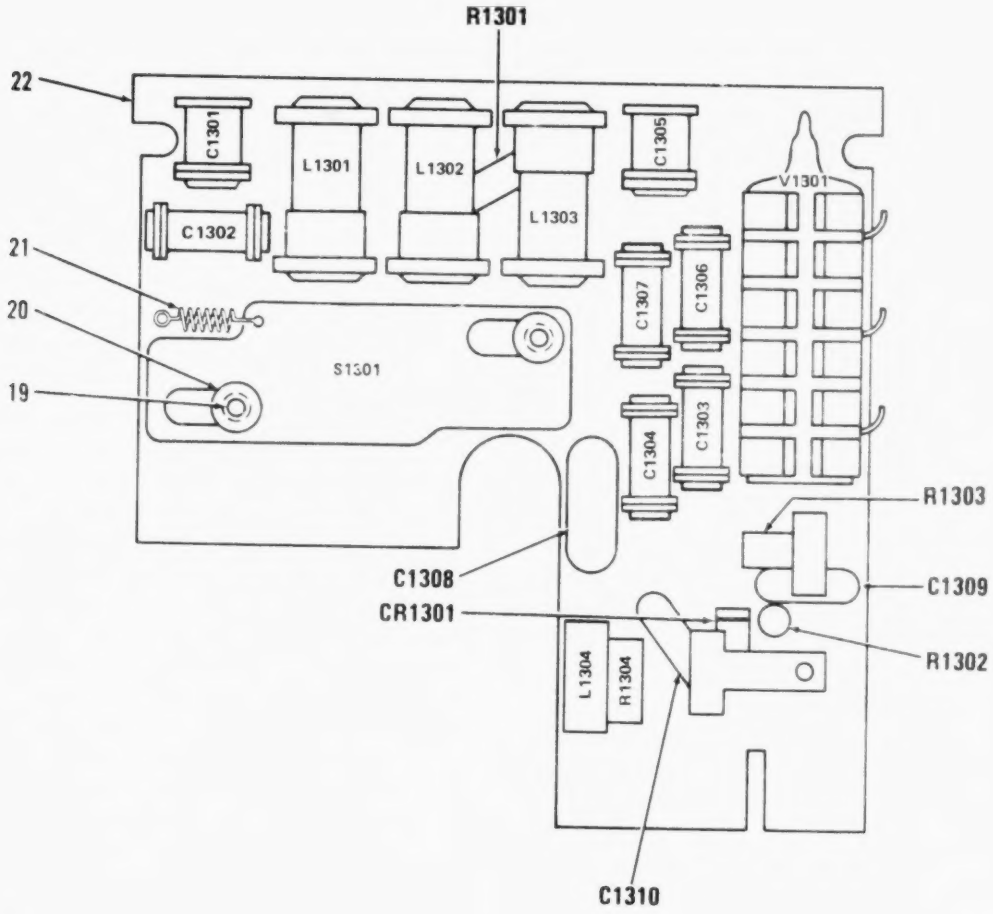

PREFIX ALL REFERENCE DESIGNATIONS WITH A1000A1300

EL6JB135

Figure 6. Amplifier, Radio Frequency, 2nd. RF Board Assembly (Sheet 2 of 3).

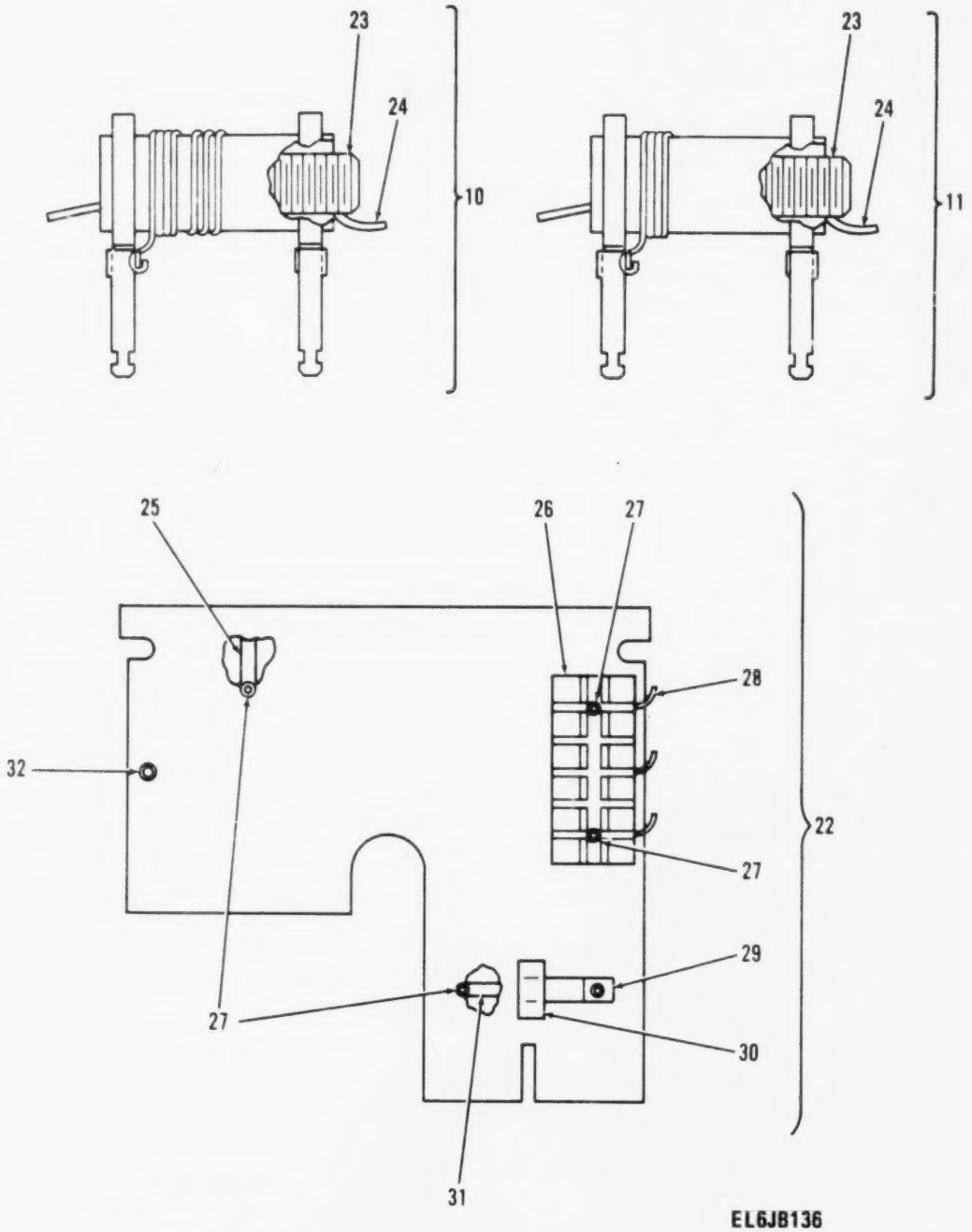

Figure 6. Amplifier, Radio Frequency, 2nd. RF Board Assembly (Sheet 3 of 3).

(1) ILLUSTRATION (a) FIG NO	(1) ILLUSTRATION (b) ITEM NO	(2) SMR CODE	(3) NATIONAL STOCK NUMBER	(4) FSCM	(5) PART NUMBER	(6) DESCRIPTION / USABLE ON CODE		
						GROUP 01010103 AMPLIFIER,RADIO FREQUENCY (2ND RF BD ASSY) A1300 SM-D-3749901		
6	1	PADZZ	5961-00-938-5249	80131	1N3550	SEMICONDUCTOR DEVIC	EA	1
6	2	PADZZ	5910-00-924-4307	81349	PC51J5R5	CAPACITOR,VARIABLE,	EA	2
6	3	PADZZ	5910-00-455-3711	72982	301-011S380-209C	CAPACITOR,FIXED CER 3 UUF,PORM .25 UUF,N1500 TEMP COEF	EA	1
6	4	PADZZ	5910-00-957-5120	72982	301-000C0J0-2298	CAPACITOR,FIXED,CER 2.2 UUF,PORM 0.1 UUF,500 VDCW,NPO TEMP COEF	EA	1
6	5	PADZZ	5910-00-455-3728	72982	301-011C0K01098	CAPACITOR,FIXED,CER 1 UUF,PORM 0.1 UUF,500 VDCW,NPO TEMP COEF	EA	1
6	6	PADZZ	5910-00-726-8695	81349	CC22CH100C	CAPACITOR,FIXED,CER	EA	1
6	7	PADZZ	5910-00-990-6813	72982	301-011T2H130G	CAPACITOR,FIXED,CER 13 UUF,PORM 2 PCT,500 VDCW,N470 TEMP COFF	EA	1
6	8	PADZZ	5910-01-030-1770	81349	CMR05F151GODR	CAPACITOR,FIXED,MIC	EA	1
6	9	PADZZ	5910-00-938-7506	18796	0801011X5FD 102K	CAPACITOR FIXED,CER .001 UF,PORM 10 PCT,500 VDCW	EA	4
6	10	PADZZ	5950-01-126-2909	80063	SM-C-416321-1	COIL,RADIO FREQUENC .200 UH MIN,.270 UH MAX INDUCTANCE AT 25 MHZ	EA	2
6	11	PADZZ	5950-01-011-3203	80063	SM-C-416327-1	COIL,RADIO FREQUENC .75 UH MIN,1.15 UH MAX INDUCTANCE AT 25 MHZ	EA	1
6	12	PADZZ		97469	10102-125	COIL,RADIO FREQUENC 12 UH,PORM 3 PCT INDUCTANCE AT 2.5 MHZ	EA	1
6	13	PADZZ	5905-00-106-1278	81349	RCR07G123JS	RESISTOR,FIXED,COMP	EA	1
6	14	PADZZ	5905-00-114-0711	81349	RCR07G472JS	RESISTOR,FIXED,COMP	EA	2
6	15	PADZZ	5905-00-120-9154	81349	RCR07G471JS	RESISTOR,FIXED,COMP	EA	1
6	16	PADZZ	5905-00-106-3668	81349	RCR07G220JS	RESISTOR,FIXED,COMP	EA	1
6	17	PADZA	5821-00-990-6461	80063	SM-C-416300	SWITCH SUBASSEMBLY	EA	1
6	18	PADZZ	5960-00-548-3072	81349	JAN6205	ELECTRON TUBE	EA	1
6	19	PADZZ	5305-00-137-7929	80063	SM-B-416363	SCREW,SELF-LOCKING	EA	2
6	20	PADZZ		80063	SM-B-416361	INSERT SCREW THREAD	EA	2
6	21	XDDZZ		80063	SM-B-481749	SPRING,HELICAL	EA	1
*6	22	XDDDA		80063	SM-D-416378	2ND RF BOARD ASSY	EA	1
6	23	PAFZZ	5950-00-904-1057	71279	3226-3	CORE,ADJUSTABLE TUN	EA	1
6	24	PAFZZ		80063	SM-B-481760	PLASTIC STRIP	EA	1
6	25	XDDZZ		80063	SM-B-416368	SPRING	EA	1
6	26	PADZZ	5960-00-729-5343	18915	3A-3	SHIELD,ELECTRON TUB	EA	1
6	27	PADZZ	5320-00-081-7418	96906	MS16535-12	RIVET,TUBULAR	EA	1
6	28	XDDZA		80063	SM-B-416376	CONTACT	EA	1
6	29	XDDZZ		80063	SM-B-416374	STAND-OFF	EA	1
6	30	XDDZA		80063	SM-B-416373	CONTACT	EA	1
6	31	XDDZA		80063	SM-C-416369-3	CONTACT	EA	1
6	32	XDDZZ		71279	3653-2-01	TERMINAL,STUD	EA	1

LEGEND

REF DES	ITEM NO	REF DES	ITEM NO	REF DES	ITEM NO	REF DES	ITEM NO
CR1401	1	C1408	2	R1402	10	R1410	9
C1401	2	C1409	4	R1403	11	R1411	16
C1402	2	C1410	2	R1404	12	R1412	9
C1403	2	C1411	5	R1405	13	R1413	17
C1404	3	J1003	6	R1406	14	T1401	18
C1405	2	L1401	7	R1407	13	T1402	19
C1406	2	Q1401	8	R1408	15	V1401	20
C1407	2	R1401	9	R1409	13		

PREFIX ALL REFERENCE DESIGNATIONS WITH A1000A1400

EL6JB137

Figure 7. Mixer Stage, Frequency, Mixer Board Assembly (Sheet 1 of 3).

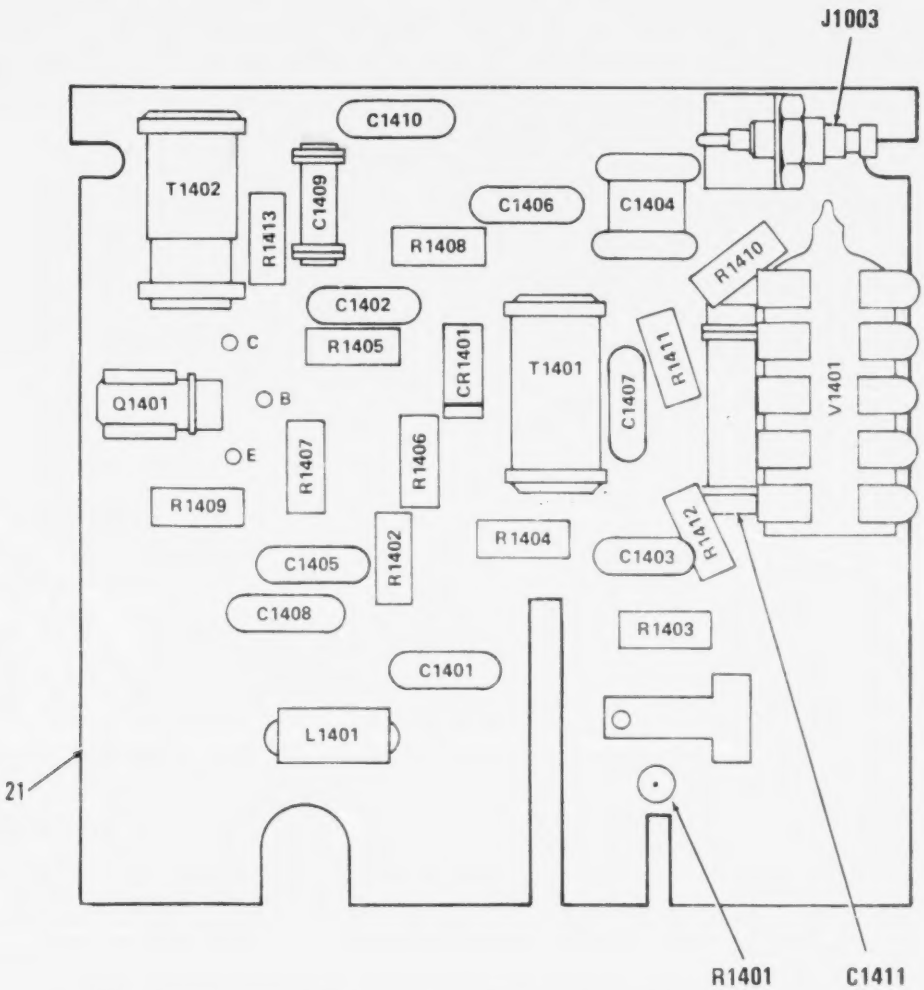

Figure 7. Mixer Stage, Frequency, Mixer Board Assembly (Sheet 2 of 3).

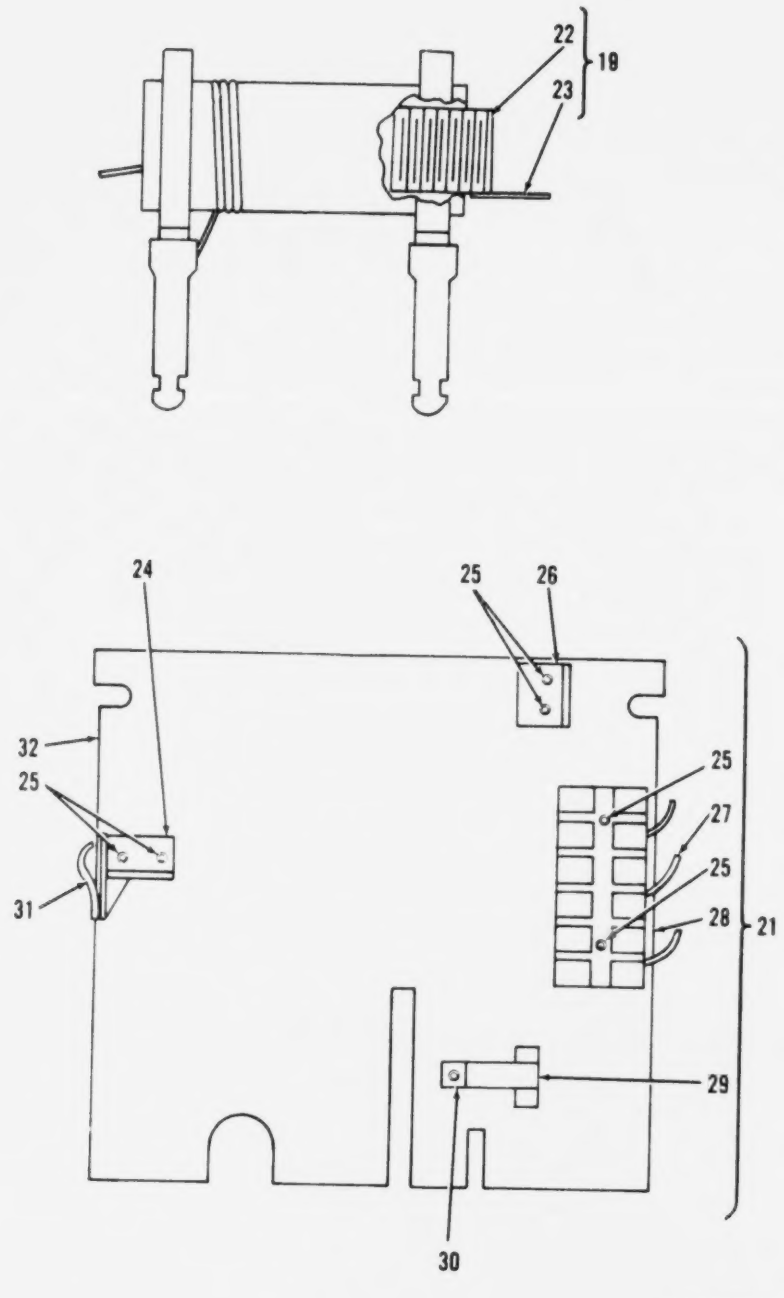

Figure 7. Mixer Stage, Frequency, Mixer Board Assembly (Sheet 3 of 3).

(1) ILLUSTRATION (a) FIG NO	(1) ILLUSTRATION (b) ITEM NO	(2) SMR CODE	(3) NATIONAL STOCK NUMBER	(4) FSCM	(5) PART NUMBER	(6) DESCRIPTION USABLE ON CODE	(7) U/M	(8) QTY INC IN UNIT
						GROUP 01010104 MIXER STAGE,FREQUENCY		
						(MIXER BD ASSY)		
						A1400 AND A1400A		
						SM-D-374986		
7	1	PADZZ	5961-00-938-5249	80131	1N3550	SEMICONDUCTOR DEVIC	EA	1
7	2	PADZZ	5910-00-464-8946	72982	855-027-X5T0472M	CAPACITOR,FIXED,CER .0047 UF,PORM 20 PCT,200 VDCW	EA	8
7	3	PADZZ	5910-00-924-4307	81349	PC51J5R5	CAPACITOR,VARIABLE,	EA	1
7	4	PADZZ	5910-00-807-1527	81349	CC22CH8R0C	CAPACITOR,FIXED,CER	EA	1
7	5	PADZZ	5910-00-990-6840	72982	302-012S3B0109C	CAPACITOR,FIXED,CER 1 UUF,PORM 0.25 UUF,500 VDCW,N3300 TEMP COEF	EA	1
7	6	PADZZ		02660	27-3	CONNECTOR,RECEPTACL	EA	1
7	7	PADZZ	5950-00-703-0907	96906	MS75008-42	COIL,RADIO FREQUENC	EA	1
7	8	PADZZ	5961-00-840-7952	81349	JAN2N499A	TRANSISTOR	EA	1
7	9	PADZZ	5905-00-111-4750	81349	RCR07G301JS	RESISTOR,FIXED,COMP	EA	3
7	10	PADZZ	5305-00-054-5637	96906	MS51957-3	SCREW,MACHINE	EA	1
7	11	PADZZ	5905-00-120-9154	81349	RCR07G471JS	RESISTOR,FIXED,COMP	EA	1
7	12	PADZZ	5905-00-106-1356	81349	RCR07G152JS	RESISTOR,FIXED,COMP	EA	1
7	13	PADZZ	5905-00-141-0743	81349	RCR07G392JS	RESISTOR,FIXED,COMP	EA	3
7	14	PADZZ	5905-00-141-0717	81349	RCR07G473JS	RESISTOR,FIXED,COMP	EA	1
7	15	PADZZ	5905-00-120-9152	81349	RCR07G274JS	RESISTOR,FIXED,COMP	EA	1
7	16	PADZZ	5905-00-115-7953	81349	RCR07G180JS	RESISTOR,FIXED,COMP	EA	1
7	17	PADZZ	5905-00-106-3666	81349	RCR07G103JS	RESISTOR,FIXED,COMP	EA	1
7	18	PADZZ	5950-01-011-4801	80063	SM-C-416328	TRANSFORMER,RADIO F 13 TO 15 UH AT 2.5 MHZ,100 VDCW,6 MILLIA CUR	EA	1
7	19	PADDD	5950-01-011-4800	80063	SM-C-416329	TRANSFORMER,RADIO F 19.0 UH MIN,24.0 UH MAX AT 2.5 MHZ	EA	1
7	20	PADZZ	5960-00-548-3072	81349	JAN6205	ELECTRON TUBE	EA	1
7	21	XADDA		80063	SM-D-374985	MIXER BOARD ASSY	EA	1
7	22	PAFZZ	5950-00-904-1057	71279	3226-3	CORE,ADJUSTABLE TUN	EA	1
7	23	PAFZZ		80063	SM-B-481760	PLASTIC STRIP	EA	1
7	24	PADZZ		81349	M24066/2-013	CLIP,SPRING TENSION	EA	1
7	25	PADZZ	5320-00-081-7418	96906	MS16535-12	RIVET,TUBULAR	EA	2
7	26	XDDZZ		80063	SM-B-416356-1	BRACKET	EA	1
7	27	XDDZA		80063	SM-B-416376	CONTACT	EA	1
7	28	PADZZ	5960-00-729-5343	18915	3A-3	SHIELD,ELECTRON TUB	EA	1
7	29	XDDZA		80063	SM-B-416373	CONTACT	EA	1
7	30	XDDZZ		80063	SM-B-416374	STAND-OFF	EA	1
7	31	XDDZA		80063	SM-C-416339-2	CONTACT	EA	1
7	32	PADZA	5820-00-457-0568	80063	SM-D-374984	PRINTED WIRING BOAR	EA	1

LEGEND

REF DES	ITEM NO	REF DES	ITEM NO	REF DES	ITEM NO	REF DES	ITEM NO
CR1501	1	C1510	9	Q1502	16	R1508	24
C1501	2	C1511	6	Q1503	16	R1509	21
C1502	3	C1512	9	R1501	17	R1510	20
C1503	4	C1513	10	R1502	18	R1511	24
C1504	5	J1004	11	R1503	19	R1512	22
C1505	6	L1501	12	R1504	20	R1513	25
C1506	7	L1502	13	R1505	21	R1514	18
C1507	8	L1503	14	R1506	22	T1501	26
C1508	9	Q1501	15	R1507	23	T1502	27
C1509	9						

PREFIX ALL REFERENCE DESIGNATIONS WITH A1000A1500

EL6JB140

Figure 8. Oscillator, Radio Frequency, Tuner Oscillator (Sheet 1 of 3).

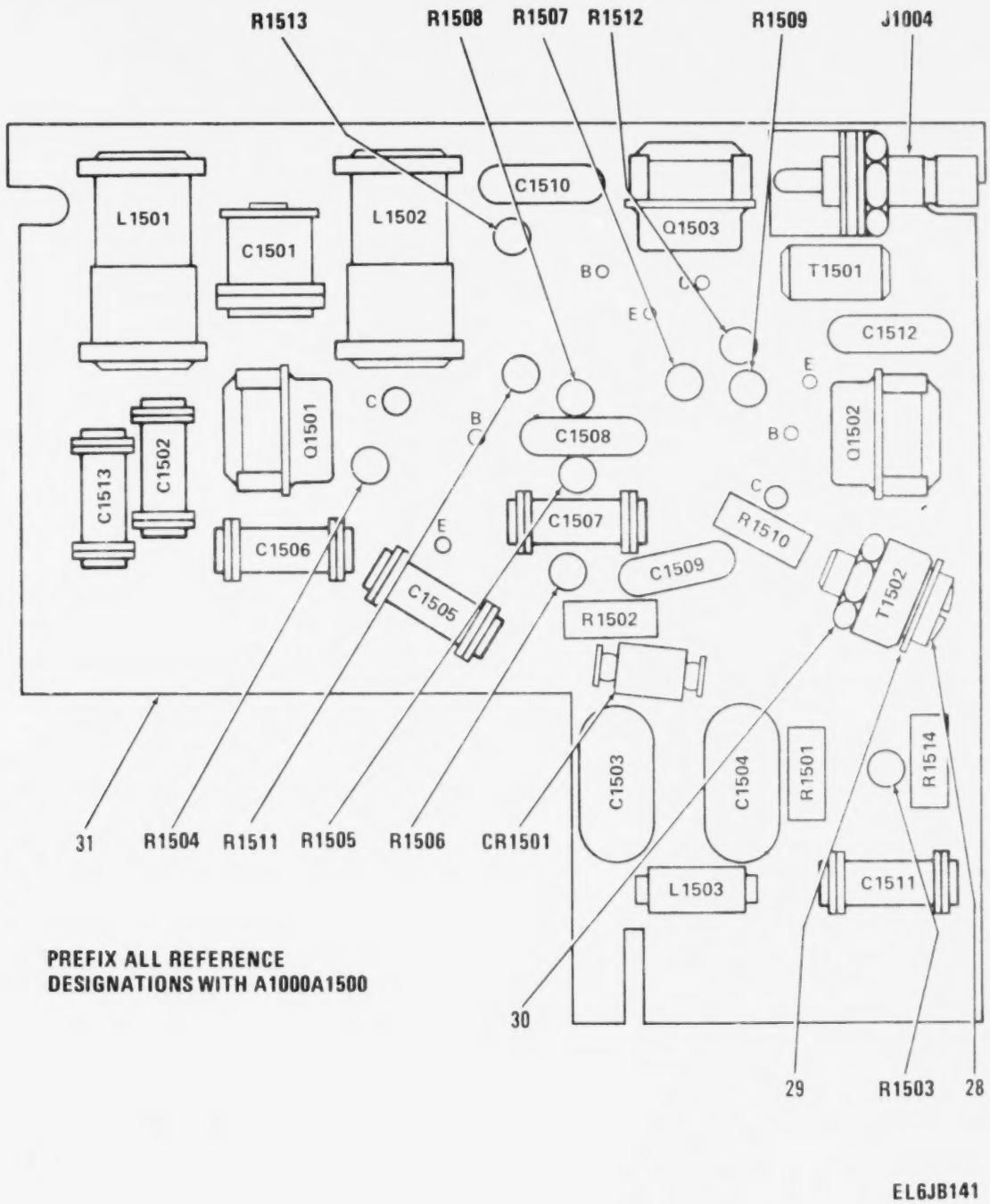

Figure 8. Oscillator, Radio Frequency, Tuner Oscillator (Sheet 2 of 3).

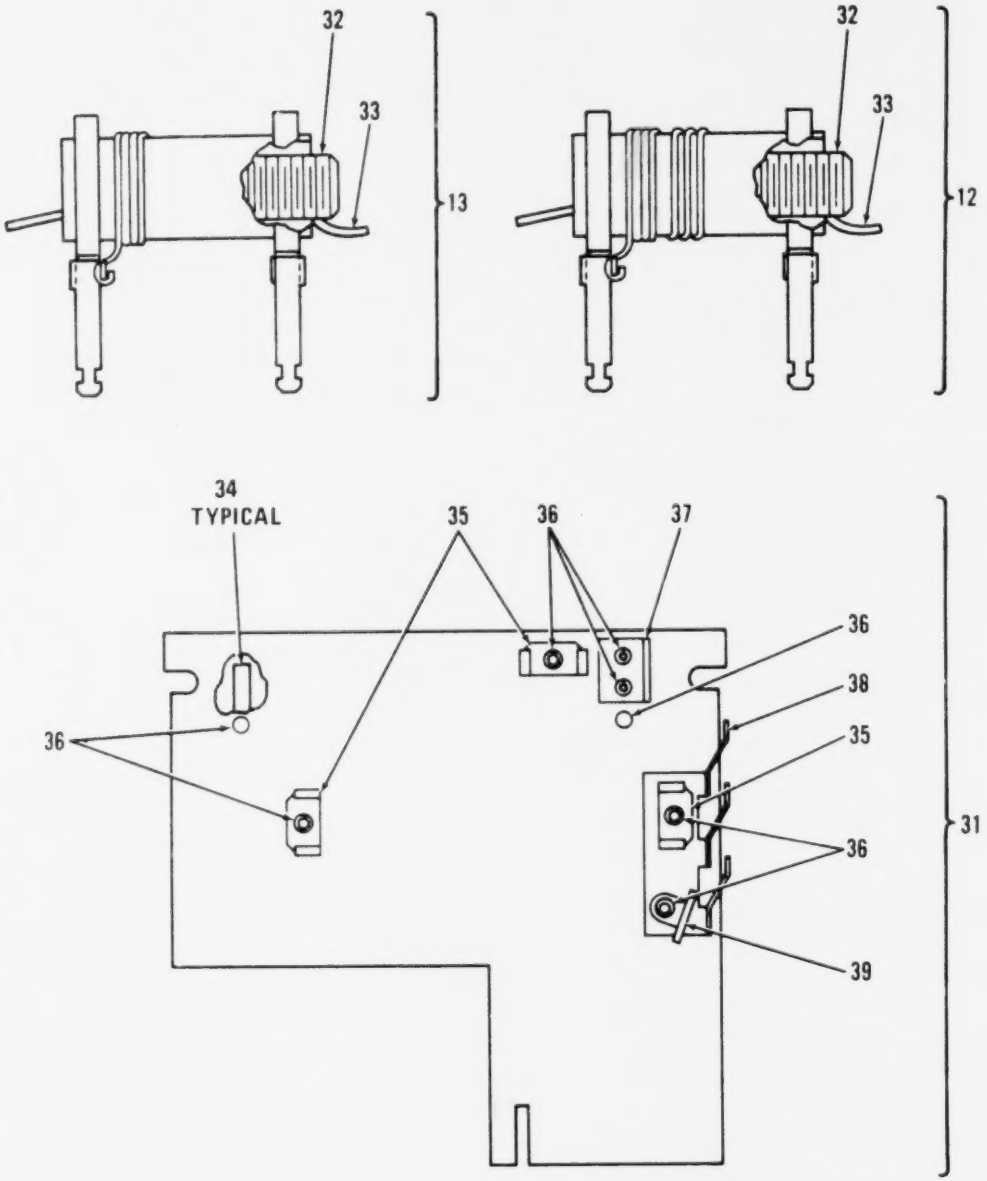

Figure 8. Oscillator, Radio Frequency, Tuner Oscillator (Sheet 3 of 3).

(1) ILLUSTRATION (a) FIG NO	(1) ILLUSTRATION (b) ITEM NO	(2) SMR CODE	(3) NATIONAL STOCK NUMBER	(4) FSCM	(5) PART NUMBER	(6) DESCRIPTION USABLE ON CODE	(7) U/M	(8) QTY INC IN UNIT
						GROUP 01010105 OSCILLATOR,RADIO FRE		
						QUENCY (TUNER OSCILLATOR		
						BDI A1500 SM-D-374989		
8	1	PADZZ	5961-00-938-5251	80131	1N3552	SEMICONDUCTOR DEVIC 17.0 TO 19.5 UUF CAPACITANCE AT 4.0 VDC AND 50 MHZ	EA	1
8	2	PADZZ	5910-00-924-4307	81349	PC51J5R5	CAPACITOR,VARIABLE,	EA	1
8	3	PADZZ	5910-00-990-6815	72982	301-011U2J03098	CAPACITOR,FIXED,CER 3.0 UUF,PORM 0.1 UUF,500 VDCW,N750 PORM 120 TEMP COEF	EA	1
8	4	PADZZ	5910-00-461-8294	72136	DM15F511G	CAPACITOR,FIXED,MIC 510 UUF,PORM 2 PCT,300 VDCW	EA	1
8	5	PADZZ	5910-00-456-0319	72136	DM15F511K	CAPACITOR,FIXED,MIC 510 UUF,PORM 10 PCT,300 VDCW	EA	1
8	6	PADZZ	5910-00-615-9452	81349	CC22CH180G	CAPACITOR,FIXED,CER	EA	2
8	7	PADZZ	5910-00-726-2448	81349	CC22CH5R0C	CAPACITOR,FIXED,CER	EA	1
8	8	PADZZ	5910-00-726-8696	81349	CC22CH120G	CAPACITOR,FIXED,CER	EA	1
8	9	PADZZ	5910-00-938-7506	18796	0801011X5F0 102K	CAPACITOR,FIXED,CER .001 UF,PORM 10 PCT,500 VDCW	EA	4
8	10	PADZZ	5910-00-805-6636	81349	CC22UK1R0C	CAPACITOR,FIXED,CER	EA	1
8	11	PADZA		02660	27-3	CONNECTOR,RECEPTACL	EA	1
8	12	PADZZ	5950-01-126-2909	80063	SM-C-416321-1	COIL,RADIO FREQUENC .200 UH MIN,.270 UH MAX INDUCTANCE AT 25 MHZ	EA	1
8	13	PADZZ	5950-01-126-2910	80063	SM-C-416310	COIL,RADIO FREQUNC 1.43 UH MIN 2.20 UH MAX INDUCTANCE AT 7.9 MHZ	EA	1
8	14	PADZZ	5950-00-449-4487	06580	10100-171	COIL,RADIO FREQUENC 2.0 UH INDUCTANCE PORM 3 PCT AT 7.9 MHZ.	EA	1
8	15	XADZZ		87216	T-2377	TRANSISTOR	EA	1
8	16	XADZZ		81349	JAN2N5028	TRANSISTOR	EA	2
8	17	PADZZ	5905-00-119-3504	81349	RCR07G273JS	RESISTOR,FIXED,COMP	EA	1
8	18	PADZZ	5905-00-116-8556	81349	RCR07G223JS	RESISTOR,FIXED,COMP	EA	2
8	19	PADZZ	5905-00-110-7622	81349	RCR07G682JS	RESISTOR,FIXED,COMP	EA	1
8	20	PADZZ	5905-00-111-4727	81349	RCR07G272JS	RESISTOR,FIXED,COMP	EA	2
8	21	PADZZ	5905-00-135-6046	81349	RCR07G681JS	RESISTOR,FIXED,COMP	EA	2
8	22	PADZZ	5905-00-119-8768	81349	RCR07G821JS	RESISTOR,FIXED,COMP	EA	2
8	23	PADZZ	5905-00-119-8812	81349	RCR07G121JS	RESISTOR,FIXED,COMP	EA	1
8	24	PADZZ	5905-00-106-1356	81349	RCR07G152JS	RESISTOR,FIXED,COMP	EA	2
8	25	PADZZ	5905-00-126-6683	81349	RCR07G332JS	RESISTOR,FIXED,COMP	EA	1
8	26	PADZZ	5950-01-011-4242	80063	SM-C-416387	TRANSFORMER,RADIO F	EA	1
8	27	XDDZZ		18510	SM-B-416385	TRANSFORMER,RF	EA	1
8	28	PADZZ		80063	SM-C-374868	SCREW,MACHINE	EA	1
8	29	XDDZZ		80063	SM-B-416307	WASHER,FLAT	EA	1
8	30	PADZZ	5310-00-903-3646	06915	HN-800	NUT,SELF-LOCKING,HE	EA	1
8	31	XADDA		80063	SM-D-374988	TUNER OSC BD ASSY	EA	1
8	32	PAFZZ	5950-00-904-1057	71279	3226-3	CORE,ADJUSTABLE TUN	EA	1
8	33	PAFZZ		80063	SM-B-481760	PLASTIC STRIP	EA	1
8	34	XDDZZ		80063	SM-B-416368	SPRING	EA	2
8	35	XDDZZ		01801	101-345	CLIP,SPR INSN	EA	3

(1) ILLUSTRATION (a) FIG NO	(b) ITEM NO	(2) SMR CODE	(3) NATIONAL STOCK NUMBER	(4) FSCM	(5) PART NUMBER	(6) DESCRIPTION USABLE ON CODE	(7) U/M	(8) QTY INC IN UNIT
8	36	PADZZ	5320-00-081-7418	96906	MS16535-12	RIVET,TUBULAR.....	EA	2
8	37	XADZZ		80063	SM-B-416356-1	BRACKET.....	EA	1
8	38	XDDZA		80063	SM-C-374867	CONTACT.....	EA	1
8	39	XDDZZ		80063	SM-B-416392	BRACKET.....	EA	1

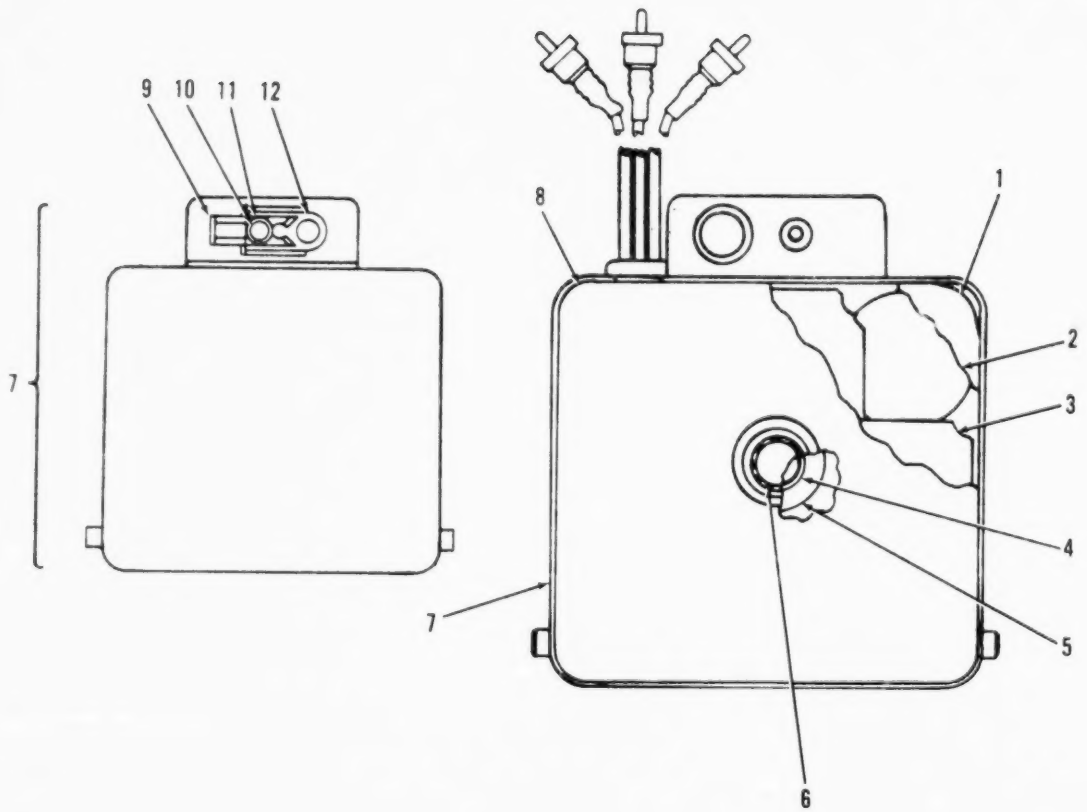

Figure 9. Power Supply (Sheet 1 of 3).

LEGEND

REF DES	ITEM NO	REF DES	ITEM NO	REF DES	ITEM NO	REF DES	ITEM NO
CR1601	14	C1601	15	L1601	17	R1602	20
CR1602	14	C1602	15	Q1601	18	R1603	21
CR1603	14	C1603	16	Q1602	18	R1604	22
CR1604	14	C1604	16	R1601	19	T1601	23
CR1605	14						

PREFIX ALL REFERENCE DESIGNATIONS WITH A1000A1600

EL6JB144

Figure 9. Power Supply (Sheet 2 of 3).

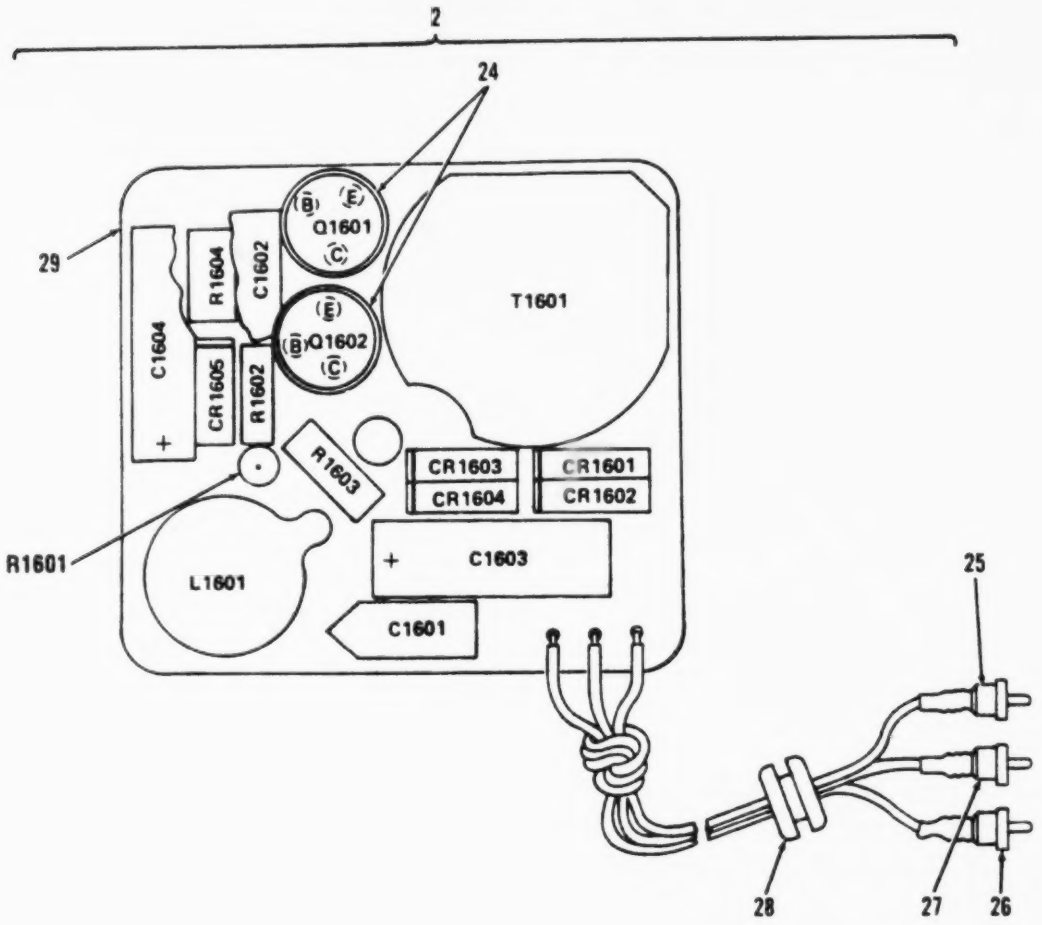

PREFIX ALL REFERENCE DESIGNATIONS WITH A1000A1600

EL6JB145

Figure 9. Power Supply (Sheet 3 of 3).

(1) ILLUSTRATION (a) FIG NO	(1) ILLUSTRATION (b) ITEM NO	(2) SMR CODE	(3) NATIONAL STOCK NUMBER	(4) FSCM	(5) PART NUMBER	(6) DESCRIPTION / USABLE ON CODE	(7) U/M	(8) QTY INC IN UNIT
						GROUP 01010106 POWER SUPPLY		
						A1600 SM-C-416316		
9	1	XDDZZ		80063	SM-B-416319	INSULATOR,PLATE	EA	1
9	2	XADDD		80063	SM-D-416322	PWR SPLY BOARD ASSY	EA	1
9	3	XDDZZ		80063	SM-B-416320	INSULATOR,PLATE	EA	1
9	4	XDDZZ		80063	SM-B-416318	SPACER	EA	1
9	5	XDDZZ		80063	SM-B-416399	WASHER,FLAT	EA	1
9	6	PADZZ	5305-00-151-6886	78189	61-040441-40-4702-4802	SCREW,ASSEMBLED WA	EA	1
9	7	XDDDD		80063	SM-C-416306	CASE ASSEMBLY	EA	1
9	8	XADZZ		80063	SM-C-416317	COVER	EA	1
9	9	PADZZ	5325-00-262-9130	88447	38881-L	LATCH,SNAPSLIDE FAS	EA	1
9	10	XDDZZ		88447	38901-R	RIVET,TUBULAR	EA	1
9	11	PADZZ		88447	38891-W	WASHER,SPRING TENSI	EA	1
9	12	XDDZZ		88447	38871-G-2	GUIDE	EA	1
9	13	XDDZZ		80063	SM-C-416311	CASE ASSEMBLY	EA	1
9	14	PADZZ	5961-00-938-5249	80131	1N3550	SEMICONDUCTOR DEVI	EA	5
9	15	PADZZ	5910-01-061-3732	81349	M39006/09-8725	CAPACITOR,FIXED,ELE 5 UF,PLUS 75 PCT MINUS 15 PCT,50 VDCW	EA	2
9	16	PADZZ	5910-00-010-6532	81349	M39006/03-1423	CAPACITOR,FIXED,ELE	EA	2
9	17	PADZZ	5950-00-938-5280	93292	500-1010	REACTOR 1.5 MILLIH,POWM 30 PCT AT 0 MILLIA DC	EA	1
9	18	PADZZ	5961-01-093-2578	80063	SM-B-416325	TRANSISTOR	EA	2
9	19	PADZZ	5905-00-104-8358	81349	RCR07G822JS	RESISTOR,FIXED,COMP	EA	1
9	20	PADZZ	5905-00-105-7764	81349	RCR07G222JS	RESISTOR,FIXED,COMP	EA	1
9	21	PADZZ	5905-00-111-8357	81349	RCR20G681JS	RESISTOR,FIXED,COMP	EA	1
9	22	PADZZ	5905-00-110-0338	81349	RCR07G104JS	RESISTOR,FIXED,COMP	EA	1
9	23	PADZZ	5950-00-938-5281	93292	500-1011	TRANSFORMER,ELECTRI PRI CUR 90 MILLIA,PRI V 50V P-P,SEC CUR 18 MILLIA,SEC V 115V	EA	1
9	24	PADZZ	5961-01-100-3849	80063	SM-B-413797	RETAINER,TRANSISTOR	EA	2
9	25	PADZZ	5940-00-937-8028	98291	FTSM-14-P20-8LK	TERMINAL,FEEDTHRU,F	EA	1
9	26	PADZZ	5940-00-403-2836	98291	FTSM-14-P20-8RN	TERMINAL,FEEDTHRU,F	EA	1
9	27	PADZZ	5940-00-403-2837	98291	FTSM-14-P20-VIO	TERMINAL,FEEDTHRU,F	EA	1
9	28	XDDZZ		76385	Z2287-RC	GROMMET,RUBBER	EA	1
9	29	XADZZ		80063	SM-D-416331	POWER SUPPLY BOARD	EA	1

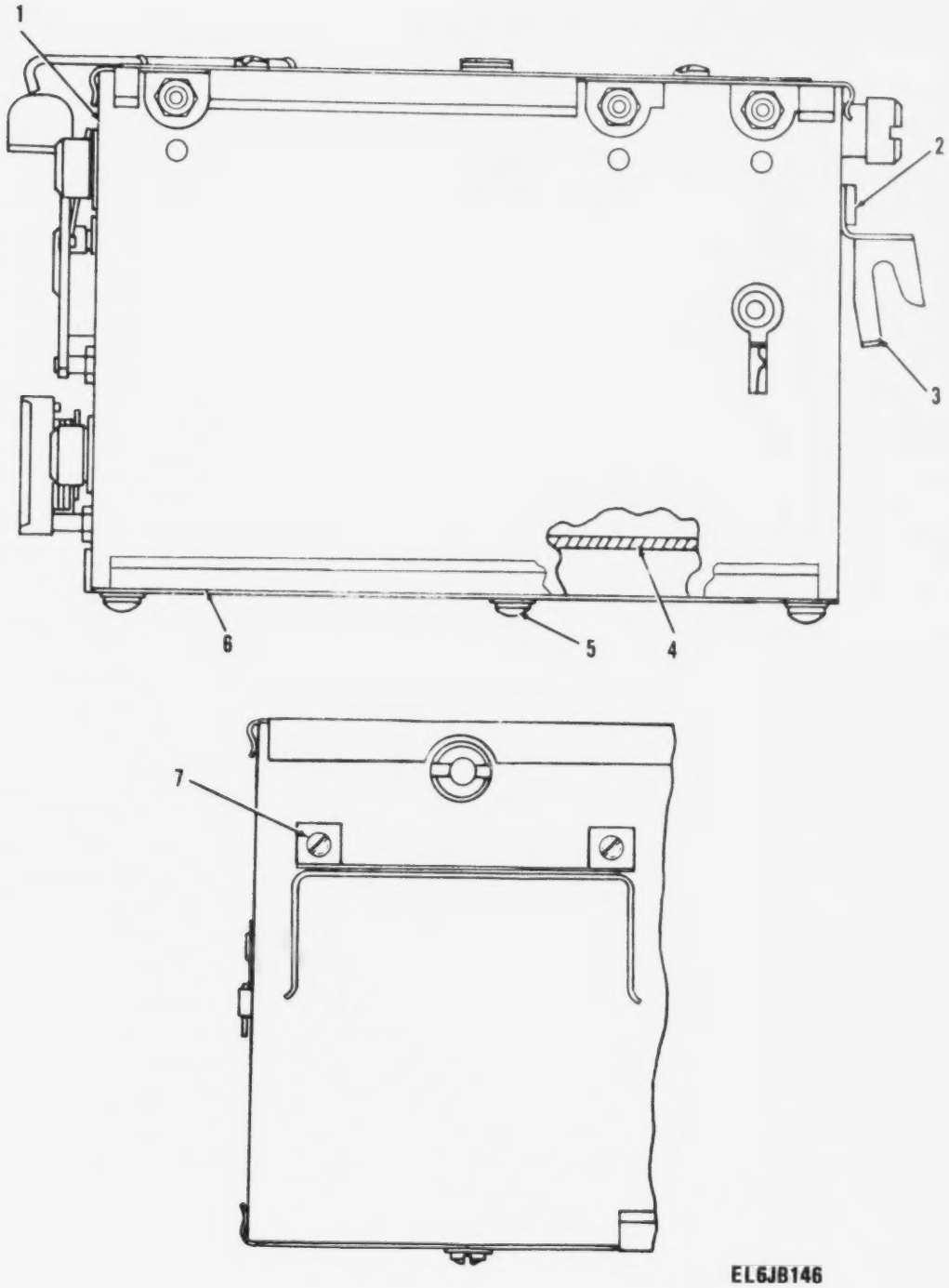

Figure 10. Receiver Subassembly (Sheet 1 of 2).

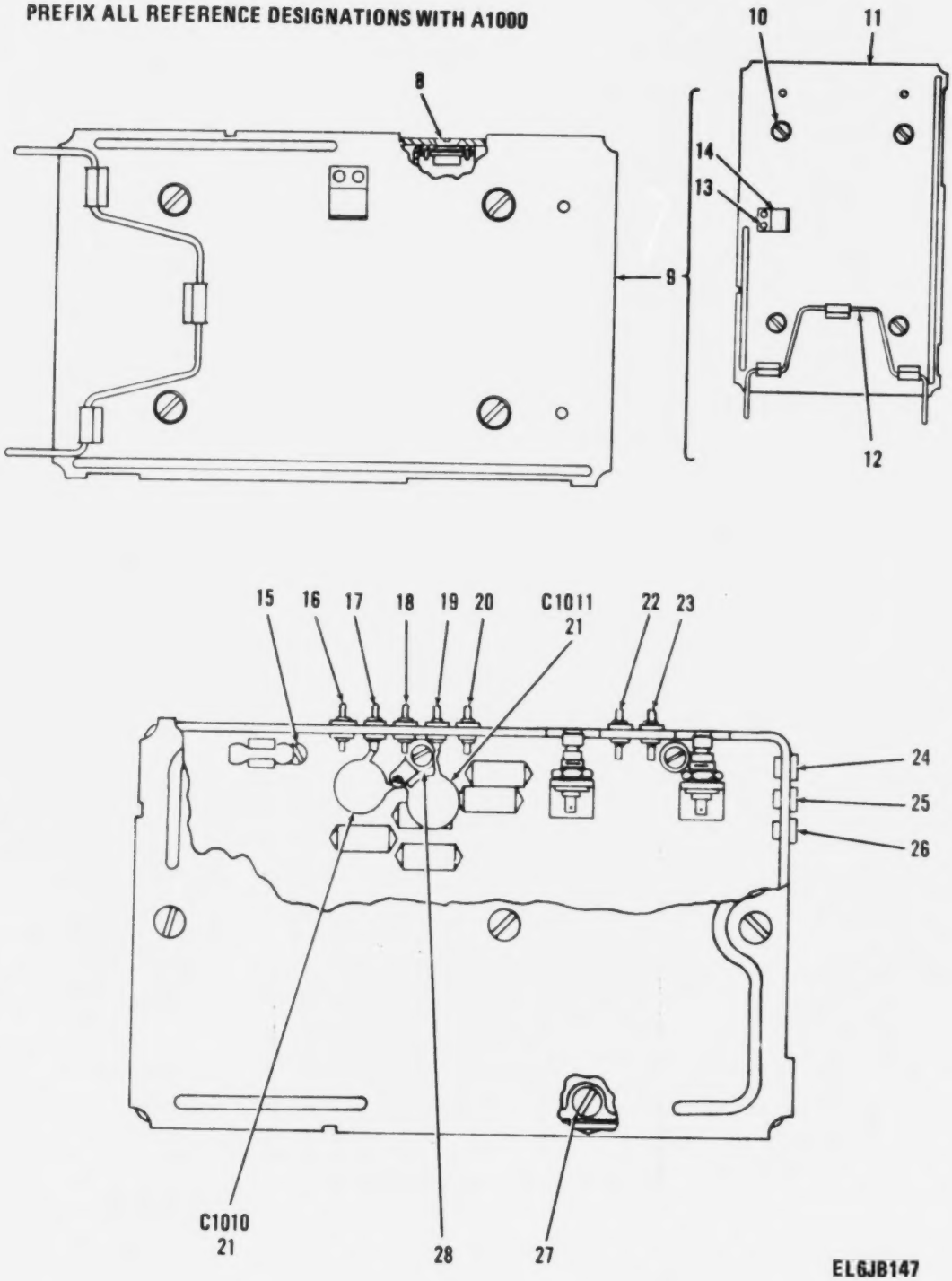

Figure 10. Receiver Subassembly (Sheet 2 of 2).

(1) ILLUSTRATION (a) FIG NO	(1) ILLUSTRATION (b) ITEM NO	(2) SMR CODE	(3) NATIONAL STOCK NUMBER	(4) FSCM	(5) PART NUMBER	(6) DESCRIPTION / USABLE ON CODE	(7) U.M.	(8) QTY INC IN UNIT
						GROUP 01010107 RECEIVER SUBASSEMBLY		
						SM-D-188980		
10	1	PADDD	5820-00-087-0011	80063	SM-D-188980	RECEIVER SUBASSEMBL	EA	1
10	2	PADZZ	5365-00-168-7244	80063	SM-B-416348	PLATE	EA	2
10	3	XDDZZ		80063	SM-D-416346	BRACKET	EA	1
10	4	PADDH	5820-00-087-0062	80063	SM-D-188981	RECEIVER SUBASSEMBL	EA	1
10	5	XBFZZ	5305-00-151-6886	78189	61-040441-40-4702-4802	SCREW,ASSEM WASH	EA	3
10	6	PAFZA	5821-00-129-6730	80063	SM-D-374932	COVER,RADIO SET	EA	1
10	7	PADZZ	5305-00-764-2966	96906	MS51959-2	SCREW,MACHINE	EA	2
10	8	PADZZ	5305-00-151-6892	80063	SM-B-188987	SCREW,MACHINE	EA	1
10	9	PAFZA	5821-00-126-4846	80063	SM-C-376929	COVER ASSEMBLY	EA	1
10	10	PAFZZ	5305-00-151-6200	80063	SM-B-374881	SCREW,EXTERNALLY RE	EA	4
10	11	XAFZA		80063	SM-D-374930	COVER	EA	1
10	12	XBFZZ		80063	SM-B-374947	BAIL	EA	1
10	13	XAFZZ		80063	SM-B-374954-1	RIVET,SOLID	EA	2
10	14	XAFZZ		80063	SM-B-374856	STRAP	EA	1
10	15	PADZZ	5305-00-151-6890	80063	SM-B-416344-1	SCREW,MACHINE	EA	7
10	16	PADZZ	5940-00-403-2836	98291	FTSM-14-P20-BRN	TERMINAL,FEEDTHRU,I	EA	1
10	17	PADZZ	5940-00-391-8789	81349	FT032801	TERMINAL,FEEDTHRU,I	EA	1
10	18	PADZZ	5940-00-403-2837	98291	FTSM-14-P20-VIO	TERMINAL,FEEDTHRU,I	EA	1
10	19	PADZZ	5940-00-391-8794	81349	FT033801	TERMINAL,FEEDTHRU,I	EA	1
10	20	PADZZ	5940-00-391-8794	81349	FT033801	TERMINAL,FEEDTHRU,I	EA	1
10	21	PADZZ	5910-00-464-8946	72982	855-027-X5T0472M	CAPACITOR,FIXED,CER .0047 UF,PURM 20 PCT,200 VDCW	EA	2
10	22	PADZZ	5940-00-706-8090	81349	FT039801	TERMINAL,FEEDTHRU,I	EA	1
10	23	PADZZ	5940-00-937-8028	98291	FTSM-14-P20-BLK	TERMINAL,FEEDTHRU,I	EA	1
10	24	PADZZ	5935-00-853-9736	98291	SKT-14-82BRN	JACK,TIP	EA	1
10	25	PADZZ	5935-00-443-2796	98291	SKT-14-82VIO	JACK,TIP	EA	1
10	26	PADZZ	5935-00-443-2795	98291	SKT-14-82BLK	JACK,TIP	EA	1
10	27	PADZZ	5305-00-151-6891	80063	SM-B-416344-2	SCREW,MACHINE	EA	1
10	28	XDDZZ		80063	SM-B-416347	TERMINAL,LUG	EA	1

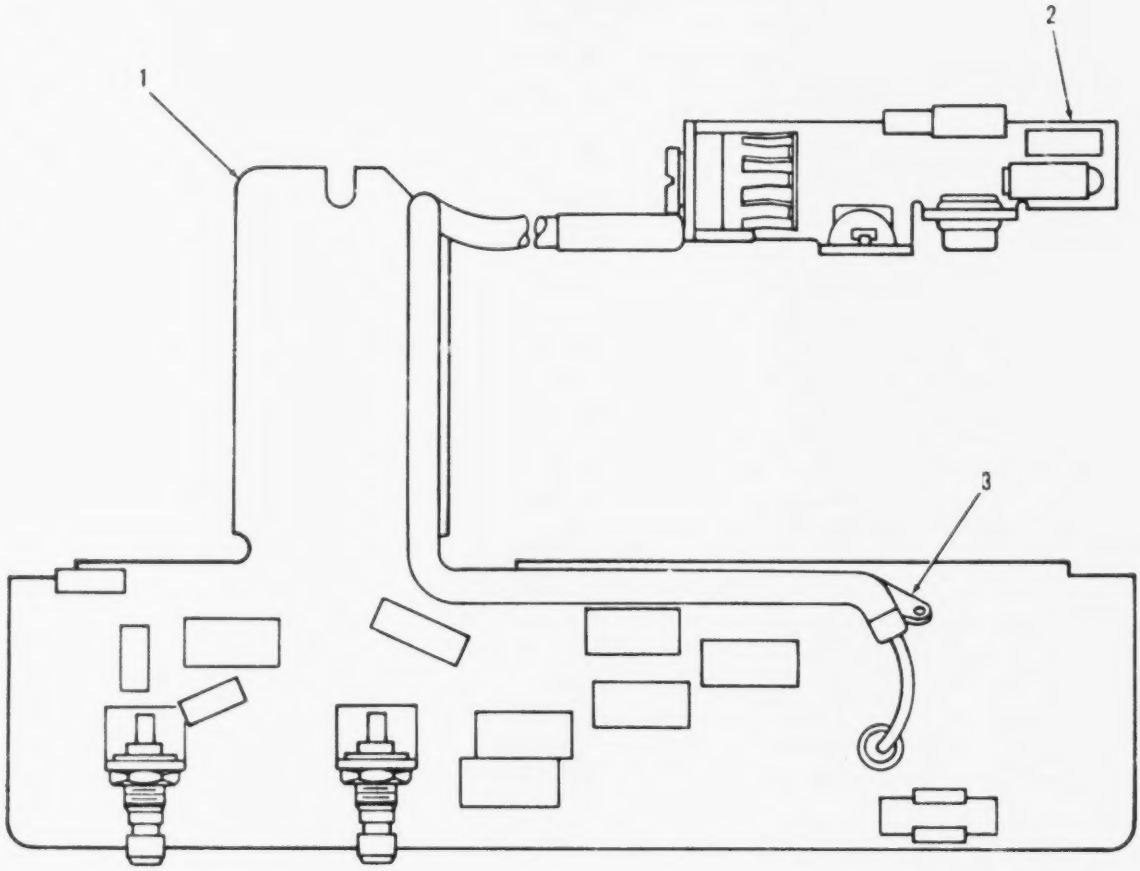

Figure 11. Receiver Subassembly, Parent Board-Regulator Assembly.

(1) ILLUSTRATION (a) FIG NO	(1) ILLUSTRATION (b) ITEM NO	(2) SMR CODE	(3) NATIONAL STOCK NUMBER	(4) FSCM	(5) PART NUMBER	(6) DESCRIPTION / USABLE ON CODE		
						GROUP 0101010701 RECEIVER SUBASSEMBLY		
						PARENT BD-REG ASSY		
						SM-D-188981		
11	1	PADDH	5820-00-087-0089	80063	SM-D-188972	RECEIVER SUBASSEMBL.....	EA	1
11	2	PADZZ	5820-00-087-0059	80063	SM-D-188976	FILIMENT REGULATOR.....	EA	1
11	3	XDDZZ		80063	SM-B-416347	TERMINAL,LUG.....	EA	1

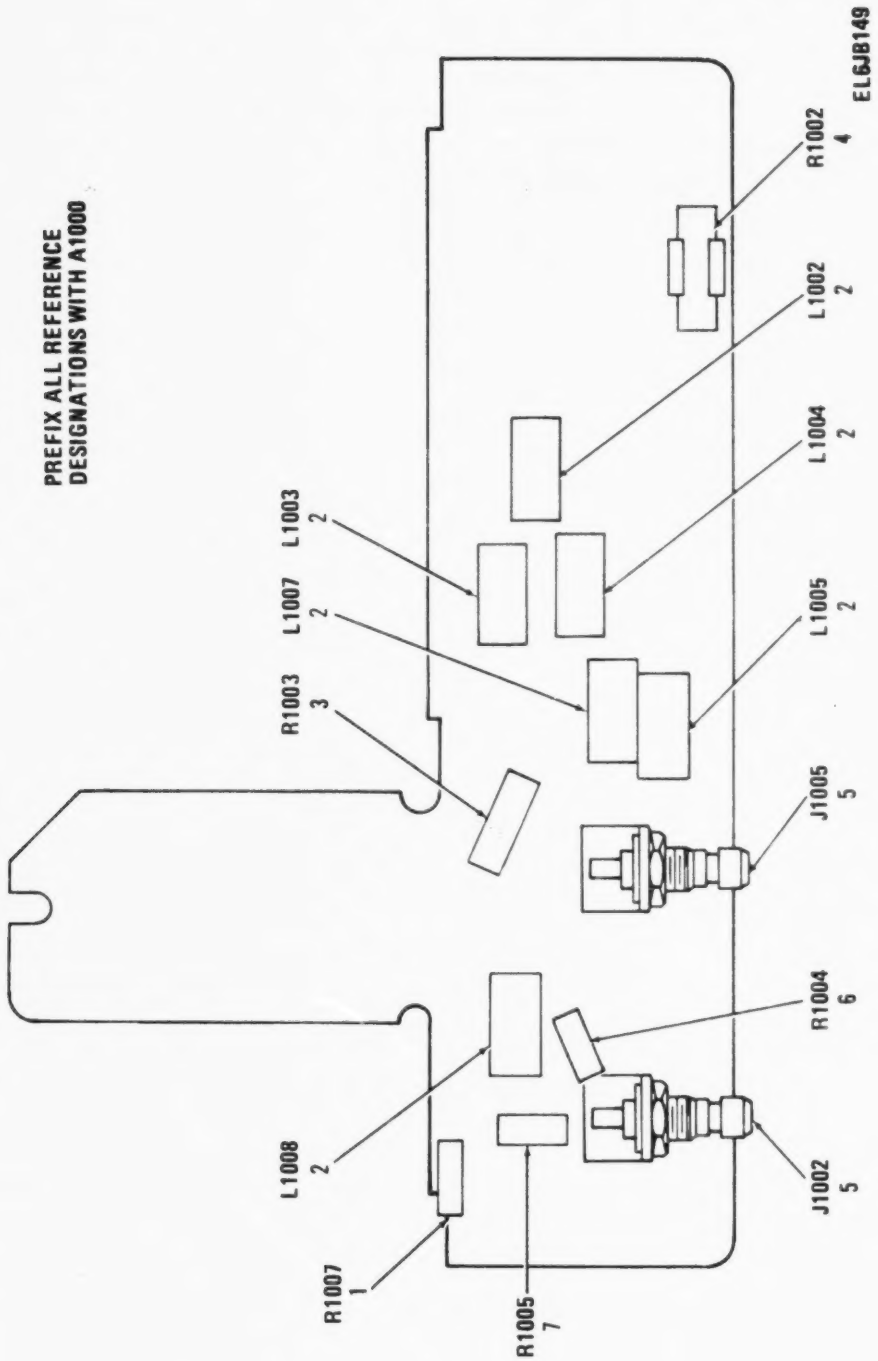

Figure 12. Receiver Subassembly, Parent Board Assembly (Sheet 1 of 2).

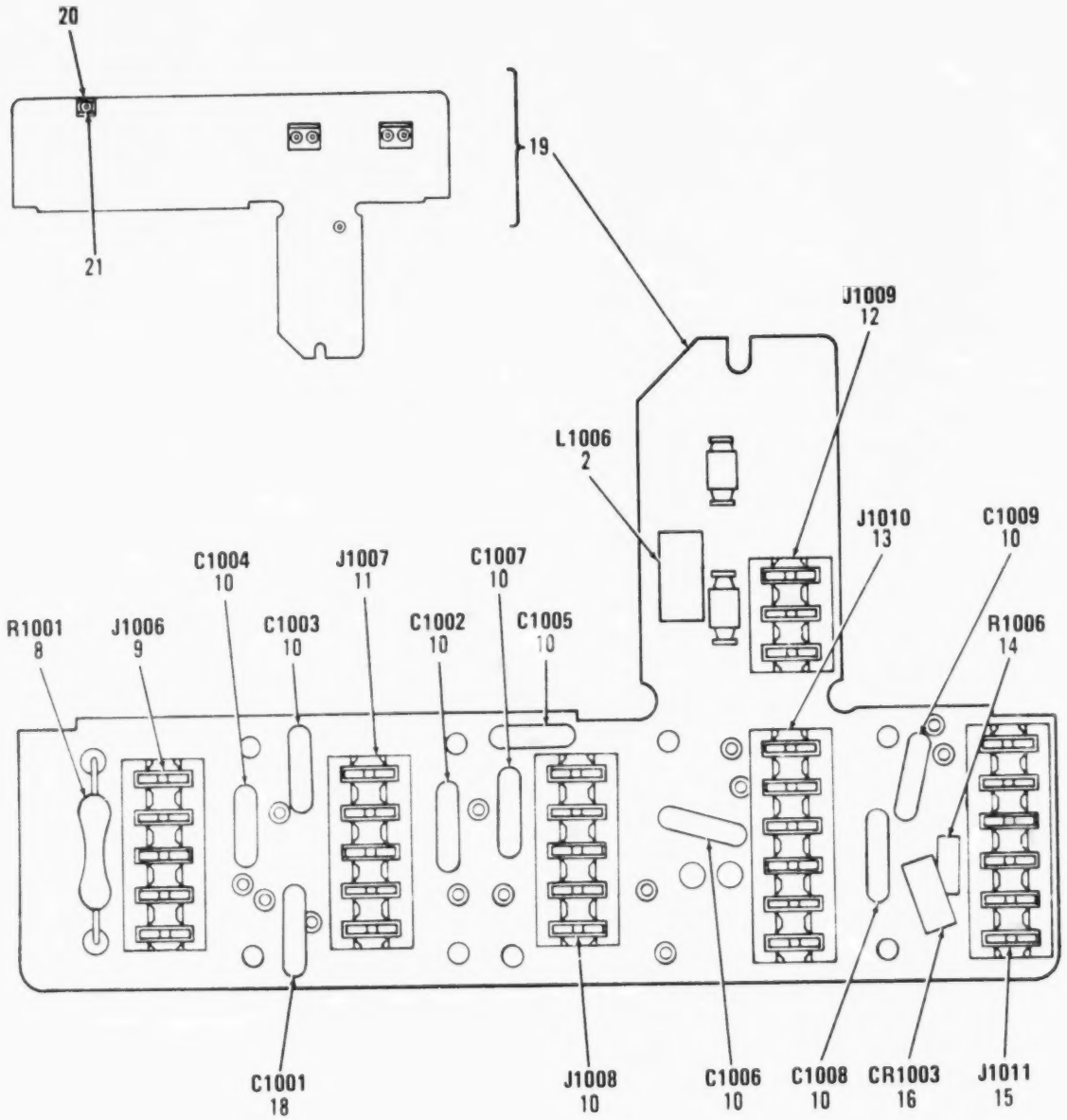

Figure 12. Receiver Subassembly, Parent Board Assembly (Sheet 2 of 2).

(1) ILLUSTRATION (a) FIG NO	(1) ILLUSTRATION (b) ITEM NO	(2) SMR CODE	(3) NATIONAL STOCK NUMBER	(4) FSCM	(5) PART NUMBER	(6) DESCRIPTION / USABLE ON CODE	(7) U/M	(8) QTY INC IN UNIT
						GROUP 01010107011 RECEIVER SUBASSEMBLY		
						(PARENT BD ASSY)		
						SM-D-188972		
12	1	PADZZ	5905-00-116-8554	81349	RCR07G105JS	RESISTOR,FIXED,COMP	EA	1
12	2	PADZZ	5950-00-042-9865	96906	MS75008-28	COIL,RADIO FREQUENC	EA	7
12	3	PADZZ	5905-00-108-6922	81349	RCR20G151JS	RESISTOR,FIXED,COMP	EA	1
12	4	PADZZ	5905-00-403-2839	91637	RS28100010	RESISTOR,FIXED,WIRE 10000 OHMS,PORM 5 PCT,3 WATTS	EA	1
12	5	PADZZ		02660	27-3	CONNECTOR,RECEPTACL	EA	2
12	6	PADZZ	5905-00-120-9154	81349	RCR07G471JS	RESISTOR,FIXED,COMP	EA	1
12	7	PADZZ	5905-00-104-8368	81349	RCR07G470JS	RESISTOR,FIXED,WIRE	EA	1
12	8	PADZZ	5905-00-782-4554	81349	RW69V121	RESISTOR,FIXED,WIRE	EA	1
12	9	PADZZ	5935-00-901-4669	02660	143-837-02	CONNECTOR,RECEPTACL 5 SOCKET TYPE CONTACTS	EA	1
12	10	PADZZ	5910-00-938-7506	18796	D81D11X5F0 102K	CAPACITOR,FIXED,CER .001 UF,PORM 10 PCT,500 VDCW	EA	8
12	11	PADZZ	5935-00-901-4670	02660	143-837-03	CONNECTOR,RECEPTACL 5 SOCKET TYPE CONTACTS	EA	1
12	12	PADZZ	5935-00-832-5593	02660	143-837-01	CONNECTOR 3 SOCKET TYPE CONTACTS	EA	1
12	13	PADZZ	5935-00-901-4673	02660	143-837-05	CONNECTOR,RECEPTACL 6 SOCKET TYPE CONTACTS	EA	1
12	14	PADZZ	5905-00-116-2394	81349	RCR07G511JS	RESISTOR,FIXED,COMP	EA	1
12	15	PADZZ	5935-00-901-4684	02660	143-837-06	CONNECTOR,RECEPTACL 6 SOCKET TYPE CONTACTS	EA	1
12	16	PADZZ		80063	SM-B-416338	SEMICONDUCTOR DEVIC	EA	1
12	17	PADZZ	5935-00-901-4672	02660	143-837-04	CONNECTOR,RECEPTACL 5 SOCKET TYPE CONTACTS	EA	1
12	18	PADZZ	5910-00-464-8946	72982	855-027-X5T047M	CAPACITOR,FIXED,CER .0047 UF,PORM 20 PCT,200 VDCW	EA	1
12	19	XADZZ		80063	SM-D-188973	PARENT BOARD ASSY	EA	1
12	20	PADZZ	5340-00-840-7418	99378	100-200-2-4	CLIP,SPRING TENSION	EA	1
12	21	PADZZ	5320-00-081-7418	96906	MS16535-12	RIVET,TUBULAR	EA	1

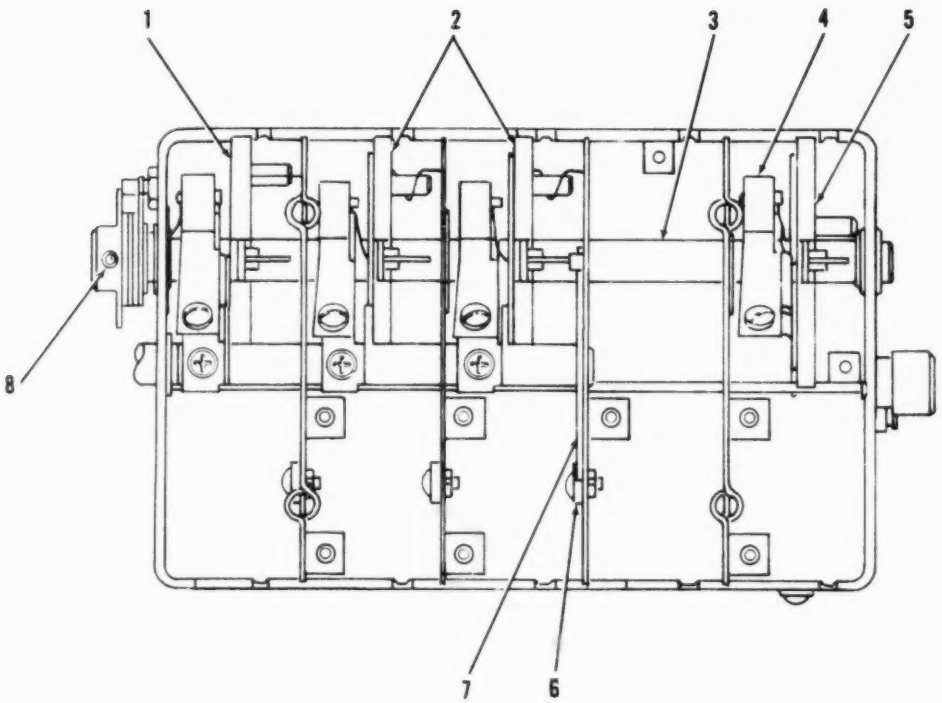

Figure 14. Tuner, Very High Frequency (Sheet 1 of 3).

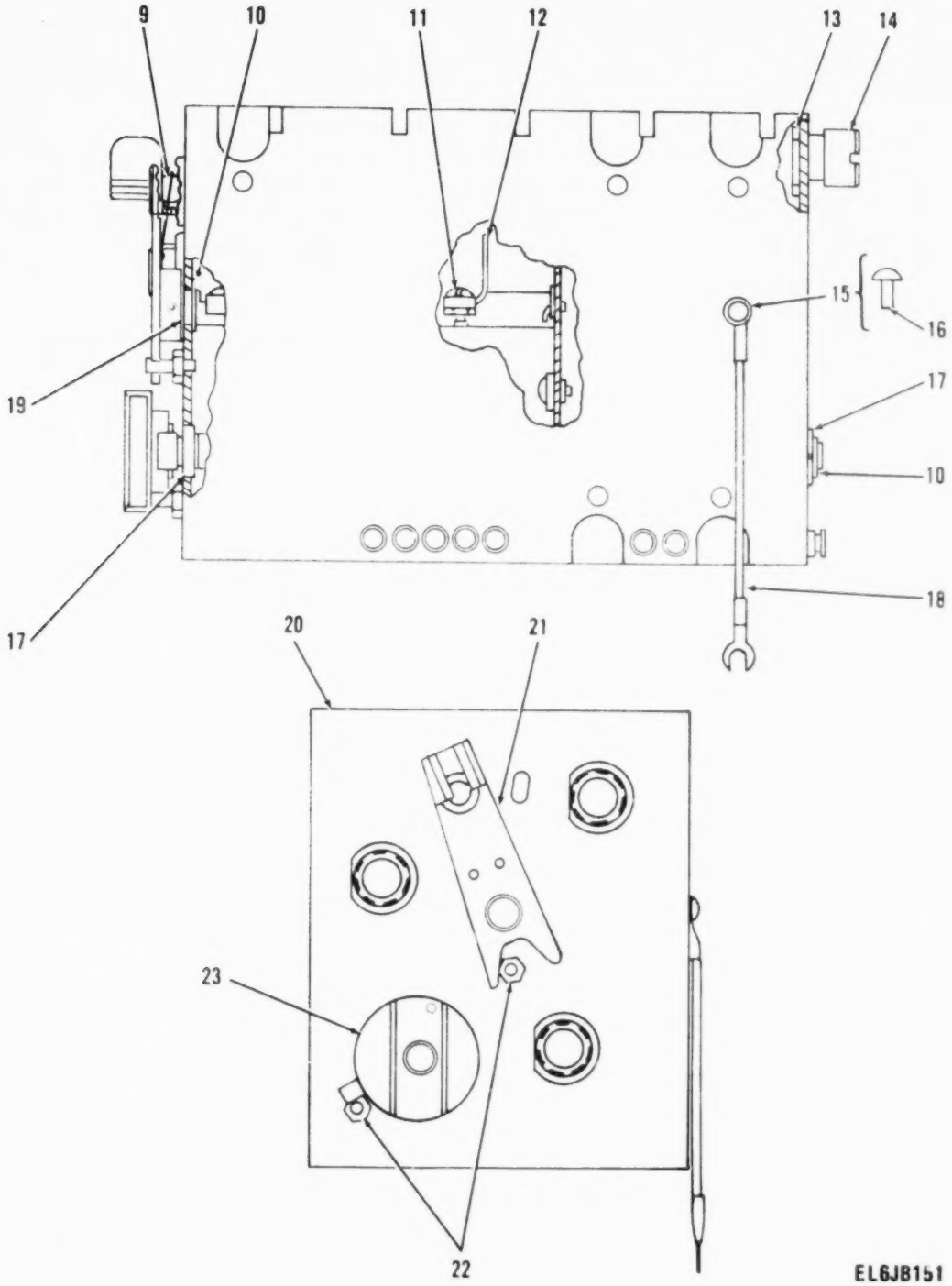

Figure 14. Tuner, Very High Frequency (Sheet 2 of 3).

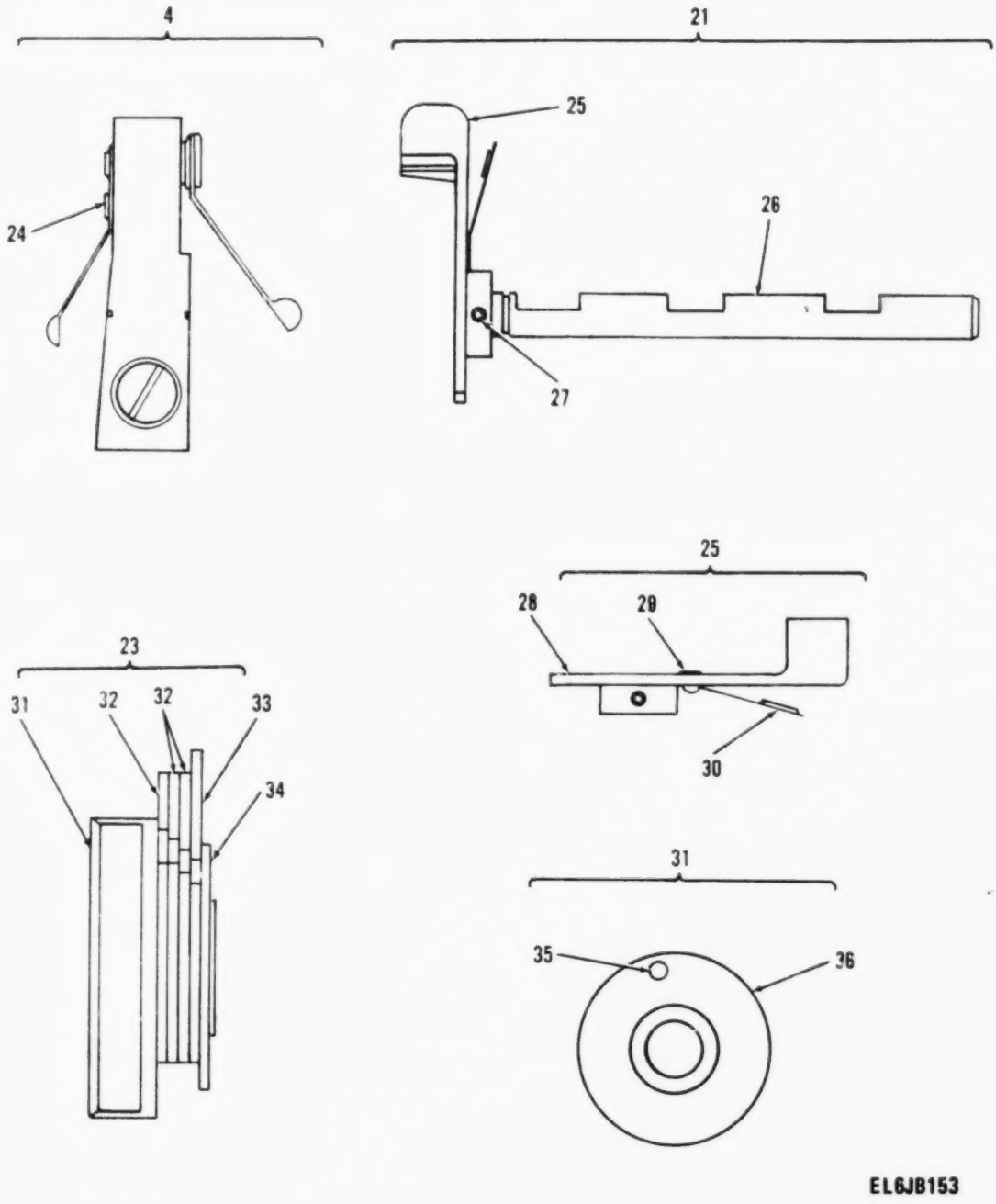

Figure 14. Tuner, Very High Frequency (Sheet 3 of 3).

(1) ILLUSTRATION (A) FIG NO	(1) ILLUSTRATION (B) ITEM NO	(2) SMR CODE	(3) NATIONAL STOCK NUMBER	(4) FSCM	(5) PART NUMBER	(6) DESCRIPTION / USABLE ON CODE	(7) U/M	(8) QTY INC IN UNIT
						GROUP 0101010702 TUNER,VHF		
						SM-D-416341		
14	1	PADZZ	5950-00-897-6387	80063	SM-D-374904	COIL,ASSEMBLY	EA	1
14	2	PADZZ	5950-00-891-9146	80063	SM-D-374905	COIL,ASSEMBLY	EA	2
14	3	XDDZZ		80063	SM-D-374916-1	SHAFT,STRAIGHT	EA	1
14	4	PADZZ	5820-00-832-5594	80063	SM-C-374886	CONTACT AND ROTOR A	EA	4
14	5	PADZZ	5950-00-891-9145	80063	SM-D-374906	COIL,ASSEMBLY	EA	1
14	6	XDDZZ		05009	FT-SM-87L1	CONTACT	EA	3
14	7	XDDZZ		80063	SM-B-374965	SPRING	EA	1
14	8	PAHZZ	5315-00-864-5644	96906	MS16562-194	PIN,SPRING	EA	1
14	9	PAHZZ	3110-00-838-5033	96906	MS134354	BALL,BEARING	EA	1
14	10	PADZZ	5365-00-550-5937	96906	MS16632-4025	RING,RETAINING	EA	1
14	11	PADZZ	5305-00-060-3225	03038	LL51957-12	SCREW,SELF-LOCKING	EA	3
14	12	XBDZZ		80063	SM-B-374896	ARM	EA	3
14	13	PADZZ	5305-00-139-7070	80063	SM-B-374892	SCREW,MACHINE	EA	1
14	14	XDDZZ		80063	SM-B-374891	STUD	EA	1
14	15	XBHZZ		80063	SM-B-374954-2	RIVET,SOLID	EA	1
14	16	PAHZZ	5320-00-830-5704	96906	MS16535-64	RIVET,TUBULAR	EA	1
14	17	XDDZZ		40920	5614FCHMELD-1	BEARING,BALL	EA	2
14	18	PAHZZ	5995-00-522-5730	80063	SM-C-374920	LEAD,ELECTRICAL	EA	1
14	19	XDDZZ		78189	SM-B-374966	WASHER,SPR ENSN	EA	1
14	20	XBDDD		80063	SM-D-374927	CASE ASSEMBLY	EA	1
14	21	PADDD	5820-00-832-5520	80063	SM-C-374885	ARM AND SHAFT ASSEM	EA	1
14	22	PADZZ	5315-00-158-4406	80063	SM-B-374858	PIN,SHOULDER,HEADLE	EA	2
14	23	PAHZZ	5820-00-832-5591	80063	SM-C-374884	COUPLING AND STOP A	EA	1
14	24	PADZZ	5320-00-952-7864	96906	MS16535-13	RIVET,TUBULAR	EA	1
14	25	XDDZZ		80063	SM-C-374895	ARM-SHAFT ASSY	EA	1
14	26	XDDZZ		80063	SM-C-374859	SHAFT,STRAIGHT	EA	1
14	27	PADZZ	5315-00-882-1438	96906	MS16562-193	PIN,SPRING	EA	1
14	28	XDDZZ		80063	SM-C-374921	ARM	EA	1
14	29	PADZZ	5320-00-821-2831	96906	MS16535-11	RIVET,TUBULAR	EA	2
14	30	XDDZZ		80063	SM-B-374928	SPRING	EA	1
14	31	PAHZZ	3040-00-420-5166	80063	SM-C-374913	COUPLING HALF,SHAFT	EA	1
14	32	PAHZZ		80063	SM-C-374926	STOP,COUPLING	EA	1
14	33	PAHZZ	3040-01-131-6237	80063	SM-C-374925	STOP,COUPLING	EA	1
14	34	PAHZZ	5365-00-286-8718	96906	MS16633-4037	RING,RETAINING	EA	1
14	35	PAHZZ		80063	SM-B-374857	PIN,STRAIGHT,HEADED	EA	1
14	36	PAHZZ	3040-01-131-6228	80063	SM-C-374914-1	COUPLING HALF,SHAFT	EA	1

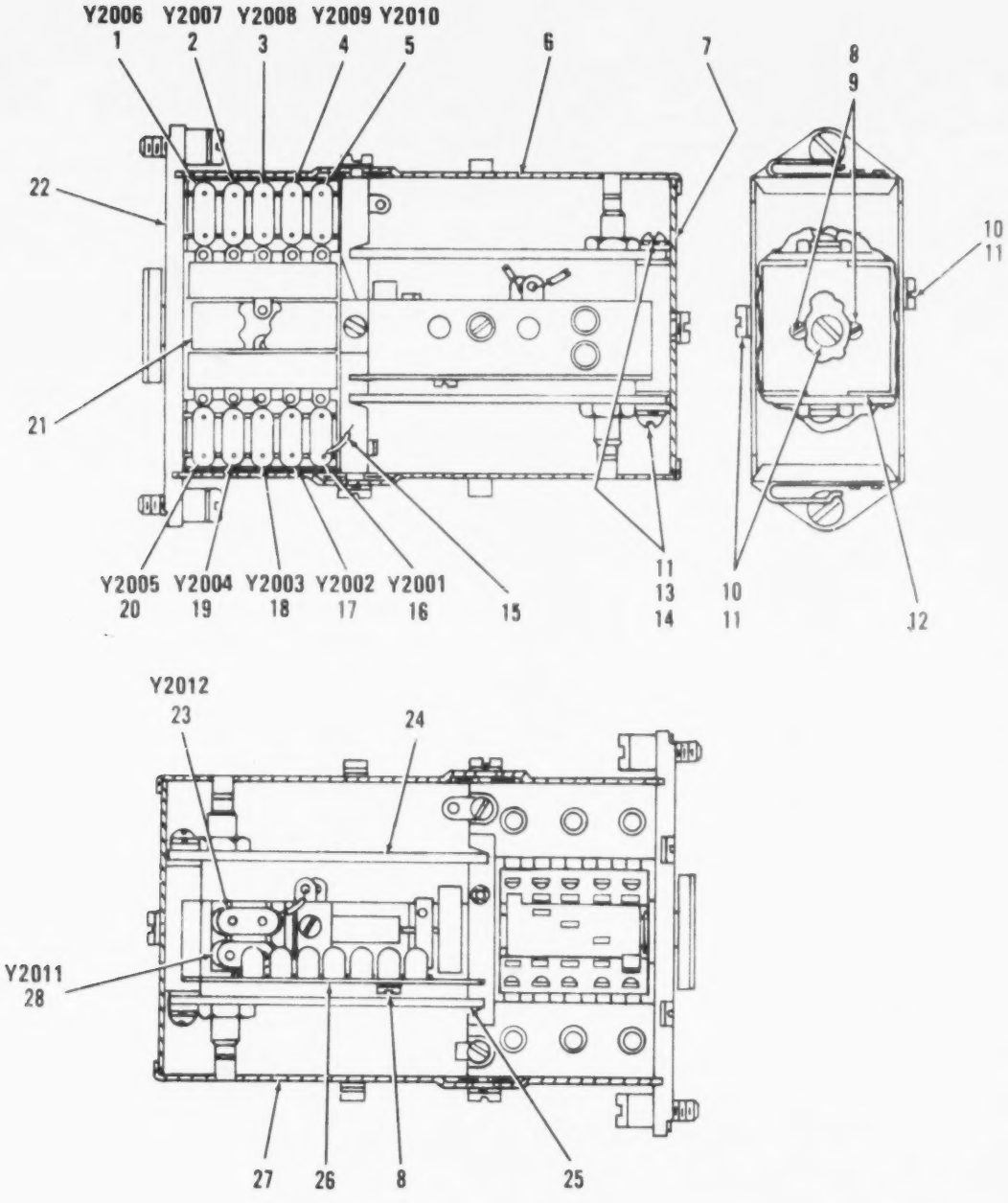

PREFIX ALL REFERENCE DESIGNATIONS WITH A2000

Figure 15. Oscillator Assembly, Radio Frequency (Sheet 1 of 2).

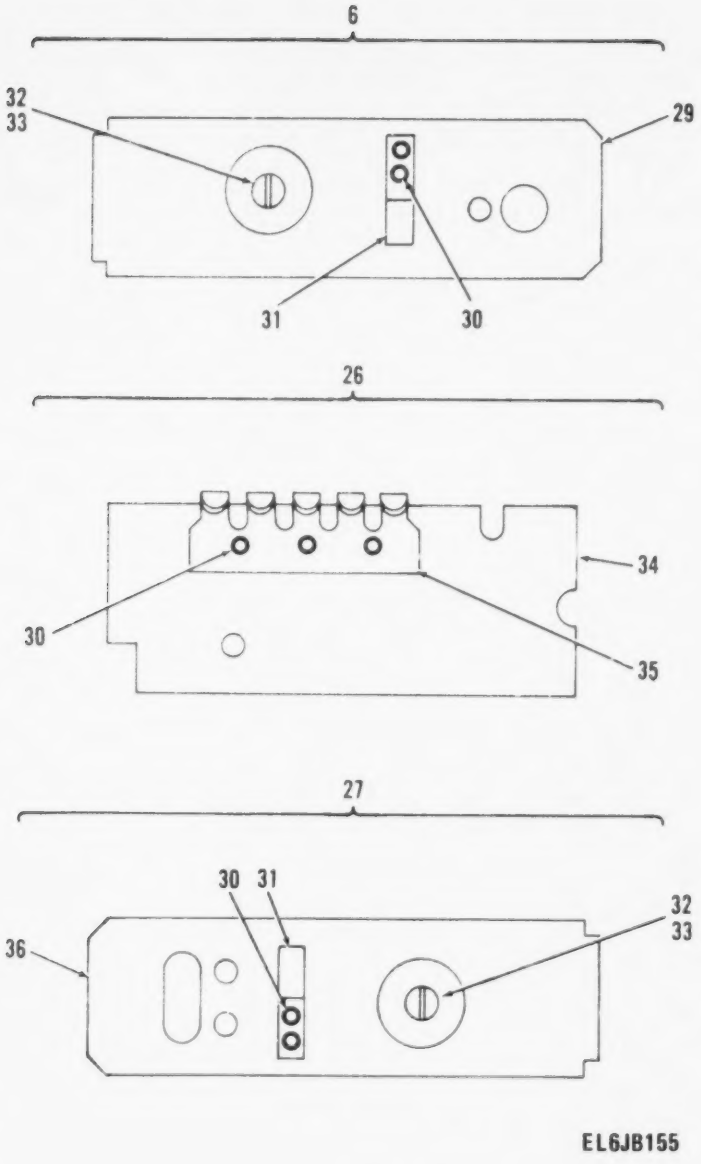

Figure 15. Oscillator Assembly, Radio Frequency (Sheet 2 of 2).

(1) ILLUSTRATION (a) FIG NO	(b) ITEM NO	(2) SMR CODE	(3) NATIONAL STOCK NUMBER	(4) FSCM	(5) PART NUMBER	(6) DESCRIPTION / USABLE ON CODE	(7) U/M	(8) QTY INC IN UNIT
						GROUP 010102 OSCILLATOR ASSY,RF		
						A2000 SM-D-414430		
15	1	PADZZ	5955-00-853-5909	80063	SM-C-414968-1	CRYSTAL UNIT,QUARTZ 46.850000 MHZ FREQ	EA	1
15	2	PADZZ	5955-00-853-6027	80063	SM-C-414968-2	CRYSTAL UNIT,QUARTZ 46.950000 MHZ FREQ	EA	1
15	3	PADZZ	5955-00-853-6451	80063	SM-C-414968-3	CRYSTAL UNIT,QUARTZ 47.050000 MHZ FREQ	EA	1
15	4	PADZZ	5955-00-879-1461	80063	SM-C-414968-4	CRYSTAL UNIT,QUARTZ 47.150000 MHZ FREQ	EA	1
15	5	PADZZ	5955-00-853-9708	80063	SM-C-414968-5	CRYSTAL UNIT,QUARTZ 47.250000 MHZ FREQ	EA	1
15	6	XDDZZ		80063	SM-C-414443	COVER ASSY	EA	1
15	7	PADZZ	5340-01-126-5334	80063	SM-C-414432	COVER,ACCESS	EA	1
15	8	PADZZ	5305-00-762-7482	96906	MS35206-202	SCREW,MACHINE	EA	2
15	9	PADZZ	5310-00-543-5060	96906	MS35338-39	WASHER,LOCK	EA	2
15	10	PADZZ	5305-00-558-4889	96906	MS35223-14	SCREW,MACHINE	EA	3
15	11	PADZZ	5310-00-543-2410	96906	MS35338-40	WASHER,LOCK	EA	3
15	12	PADZZ	5340-00-168-7242	80063	SM-C-414435	STOP	EA	1
15	13	PADZZ	5305-00-405-8960	96906	MS35223-13	SCREW,MACHINE	EA	2
15	14	PADZZ	5310-00-150-4133	80063	SM-B-414433	WASHER,FLAT	EA	2
15	15	XBDZZ		80063	SM-D-414638	WIRING ASSY,RF OSC	EA	1
15	16	PADZZ	5955-00-853-5838	80063	SM-C-414968-10	CRYSTAL UNIT,QUARTZ 47.750000 MHZ FREQ	EA	1
15	17	PADZZ	5955-00-853-6533	80063	SM-C-414968-9	CRYSTAL UNIT,QUARTZ 47.650000 MHZ FREQ	EA	1
15	18	PADZZ	5955-00-853-6532	80063	SM-C-414968-8	CRYSTAL UNIT,QUARTZ 47.550000 MHZ FREQ	EA	1
15	19	PADZZ	5955-00-853-6372	80063	SM-C-414968-7	CRYSTAL UNIT,QUARTZ 47.450000 MHZ FREQ	EA	1
15	20	PADZZ	5955-00-853-6531	80063	SM-C-414968-6	CRYSTAL UNIT,QUARTZ 47.350000 MHZ FREQ	EA	1
15	21	XDDZZ		80063	SM-B-414434	INSULATOR,PLATE	EA	1
15	22	PADDA	5820-00-896-1842	80063	SM-D-414463	SWITCH,ELECTRICAL	EA	1
15	23	PADZZ	5955-00-985-8945	80063	SM-B-374951-2	CRYSTAL UNIT,QUARTZ 5600.000 KHZ FREQ	EA	1
15	24	PADDL	5820-00-853-5922	80063	SM-D-414456	OSCILLATOR SUBASSEM	EA	1
15	25	PADDL	5820-00-853-5921	80063	SM-D-414446	OSCILLATOR SUBASSEM	EA	1
15	26	XDDZZ		80063	SM-B-414436	PLATE ASSY	EA	1
15	27	PADZZ		80063	SM-C-414440	COVER ASSY	EA	1
15	28	PADZZ	5955-00-089-8584	80063	SM-B-374951-1	CRYSTAL UNIT,QUARTZ 5650.000 KHZ FREQ	EA	1
15	29	PADZZ		80063	SM-D-414445	COVER	EA	1
15	30	XDDZZ		08544	SE23SL PL	EYELET,MTLC	EA	3
15	31	XDDZZ		80063	SM-P-414024	CLIP	EA	1
15	32	XDDZZ	5305-00-988-5747	83486	43-04-04120CD PL	SCREW,ASSEMBLED WAS	EA	1
15	33	XDDZZ		78553	C-1869SS-012	FASTENER,SH SPR	EA	1
15	34	XDDZZ		80063	SM-C-414438	PLATE	EA	1
15	35	XDDZA		30817	SM-C-414439	STRIP	EA	1
15	36	XDDZZ		80063	SM-D-414442	COVER	EA	1

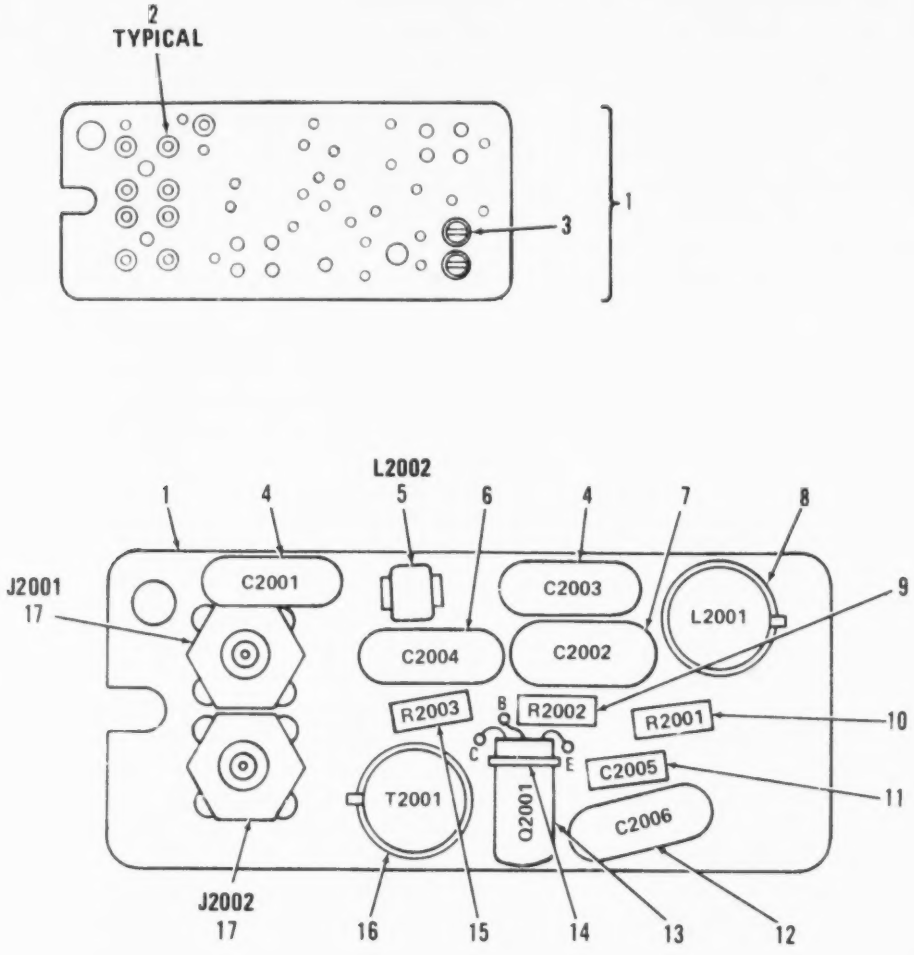

PREFIX ALL REFERENCE DESIGNATIONS WITH A2000 EL6JB156

Figure 16. Oscillator Subassembly, Interpolation Oscillator.

(1) ILLUSTRATION (a) FIG NO	(1) ILLUSTRATION (b) ITEM NO	(2) SMR CODE	(3) NATIONAL STOCK NUMBER	(4) FSCM	(5) PART NUMBER	(6) DESCRIPTION USABLE ON CODE	(7) U/M	(8) QTY INC IN UNIT
						GROUP 01010201 OSCILLATOR SUBASSEMBLY (INTERPOLATION OSC) SM-D-414446 SM-D-921122		
16	1	XADZZ		80063	SM-C-414449	CIRCUIT CARD ASSEMB.....	EA	1
16	2	XDDZZ		70528	453S-060	EYELET,MTLC.....	EA	4
16	3	PADZZ	5940-00-549-8177	88245	2020B	TERMINAL,STUD.....	EA	2
16	4	XDDZZ	5910-00-890-0554	80063	SM-C-413567-3	CAPACITOR,FIXED,CER .0047 UF,PURM 20 PCT,100 VDCW.....	EA	2
16	5	PADZZ	5950-00-891-9158	80063	SM-C-413577	COIL,RADIO,FREQUEN 1 MILLIH INDUCTANCE PURM 10 PCT.....	EA	1
16	6	PADZZ	5910-00-857-5305	18796	855-222X5S0-103M	CAPACITOR,FIXED,CER .01 UF,PURM 20 PCT 100 VDCW.....	EA	1
16	7	XDDZZ		81349	CMR05F161JODL	CAPACITOR,MICA DIEL.....	EA	1
16	8	PADZZ	5950-00-891-9166	80063	SM-D-414454	COIL,RADIO FREQUENC 0.41 UH,PURM 10 PCT AT 25.0 MHZ PURM .02 PCT.....	EA	1
16	9	PADZZ	5905-00-141-0743	81349	RCR07G392JS	RESISTOR,FIXED,COMP.....	EA	1
16	10	PADZZ	5905-00-111-4727	81349	RCR07G272JS	RESISTOR,FIXED,COMP.....	EA	1
16	11	PADZZ	5910-00-806-0668	81349	CC22CH7R0D	CAPACITOR,FIXED,CER.....	EA	1
16	12	PADZZ	5910-01-030-1771	81349	CMR05E200JODR	CAPACITOR,FIXED,MIC.....	EA	1
16	13	XADZZ		81349	JAN2N499A	TRANSISTOR.....	EA	1
16	14	PADZZ	5970-00-989-8333	07047	A-10042	INSULATOR,DISK.....	EA	1
16	15	PADZZ	5905-00-110-7622	81349	RCR07G682JS	RESISTOR,FIXED,COMP.....	EA	1
16	16	PADZZ	5950-00-891-9165	80063	SM-D-414452	TRANSFORMER,RADIO F.....	EA	1
16	17	PADZA	5935-00-891-9159	05009	5023	CONNECTOR,RECEPTACL 1 PIN TYPE CONTACT,9.0 MILLIV MAX CONTACT RESISTANCE.....	EA	2

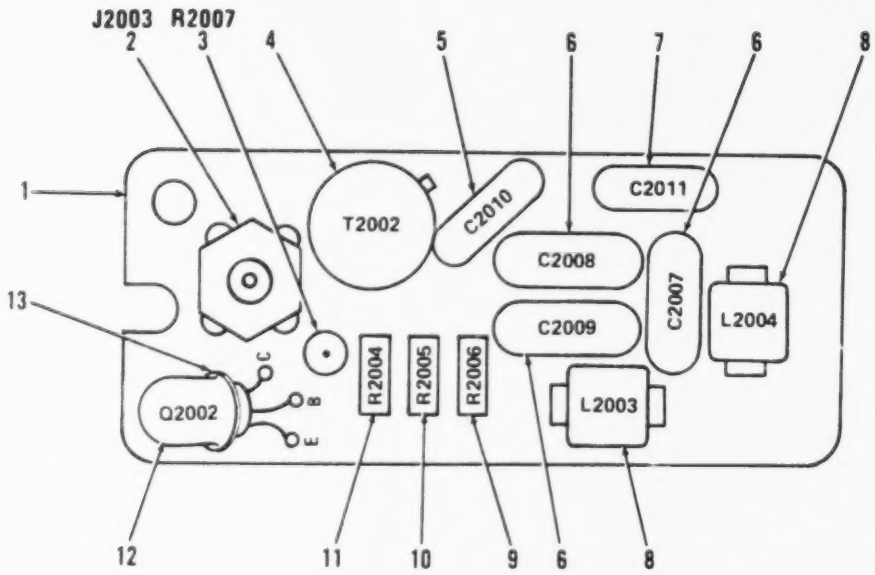

PREFIX ALL REFERENCE DESIGNATIONS WITH A2000

EL6JB157

Figure 17. Oscillator Subassembly, Reference Oscillator.

(1) ILLUSTRATION (a) FIG NO	(1) ILLUSTRATION (b) ITEM NO	(2) SMR CODE	(3) NATIONAL STOCK NUMBER	(4) FSCM	(5) PART NUMBER	(6) DESCRIPTION / USABLE ON CODE	(7) U/M	(8) QTY INC IN UNIT
						GROUP 01010202 OSCILLATOR SUBASSEMBLY		
						(REFERENCE OSC)		
						SM-D-414456 SM-D-921142		
17	1	XADZZ		80063	SM-C-414458	CIRCUIT BD ASSY	EA	1
17	2	PADZA	5935-00-891-9159	05009	5023	CONNECTOR,RECEPTACL	EA	1
17	3	PADZZ	5905-00-106-3668	81349	RCR07G220JS	RESISTOR,FIXED,COMP	EA	1
17	4	XADZZ		80063	SM-D-414460	PRINTED CIRCUIT BD	EA	1
17	5	XDDZZ		81349	CMR05E620FODL	CAPACITOR,MICA DIEL	EA	1
17	6	PADZZ	5910-00-857-5305	18796	855-222X5S0-103M	CAPACITOR,FIXED,CER .01 UF,PORM 20 PCT,100 VDCW	EA	3
17	7	XDDZZ	5910-01-029-3822	81349	CMR06F511GODR	CAPACITOR,FIXED,MIC	EA	1
17	8	PADZZ	5950-00-891-9158	80063	SM-C-413577	COIL,RADIO,FREQUEN 1 MILLIH INDUCTANCE,PORM 10 PCT	EA	1
17	9	PADZZ	5905-00-110-7622	81349	RCR07G682JS	RESISTOR,FIXED,COMP	EA	1
17	10	PADZZ	5905-00-141-0743	81349	RCR07G392JS	RESISTOR,FIXED,COMP	EA	1
17	11	PADZZ	5905-00-111-4727	81349	RCR07G272JS	RESISTOR,FIXED,COMP	EA	1
17	12	XADZZ		81349	JAN2N499A	TRANSISTOR	EA	1
17	13	PADZZ	5970-00-989-8333	07047	A-10042	INSULATOR,DISK	EA	1

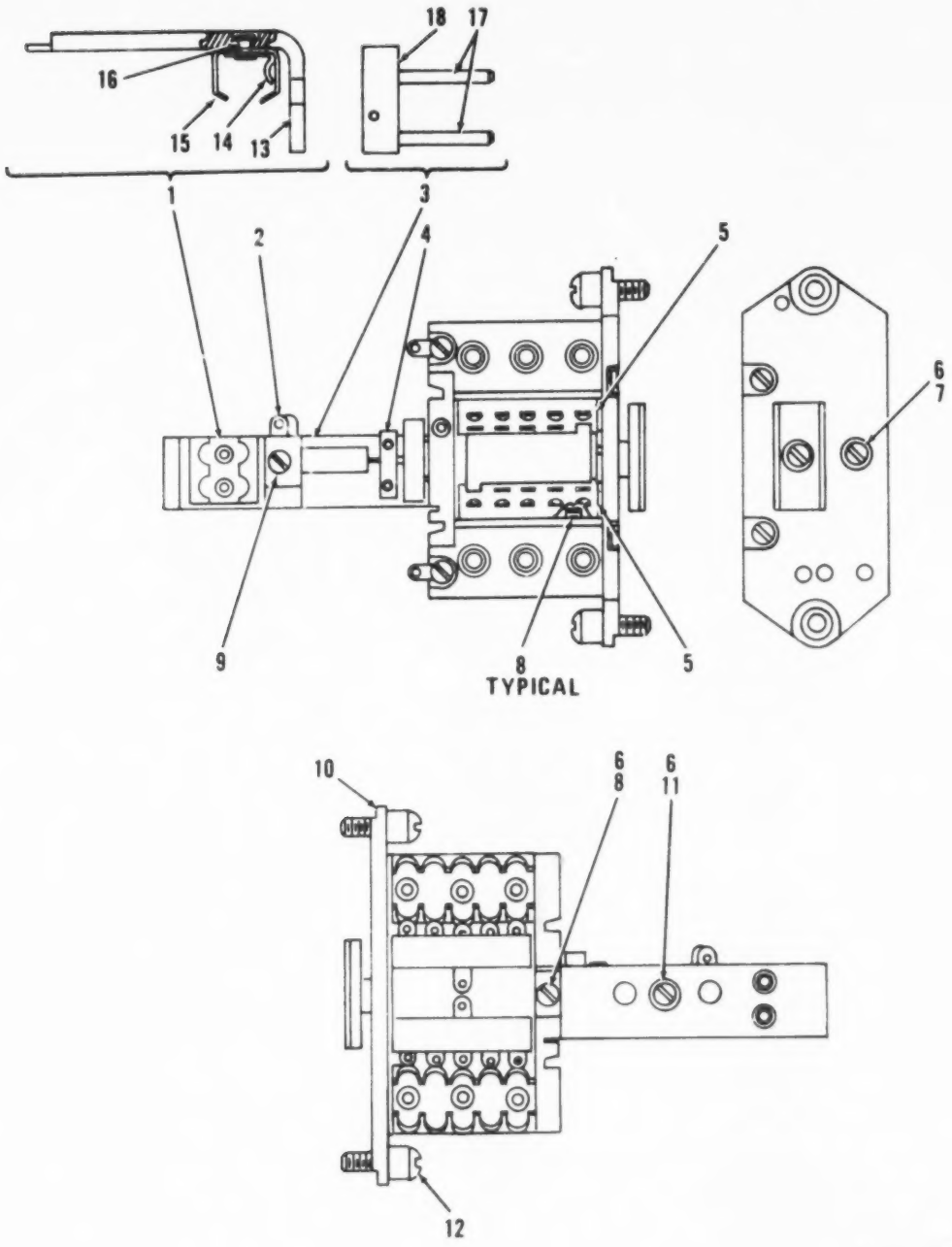

Figure 18. Switch Assembly (Sheet 1 of 3).

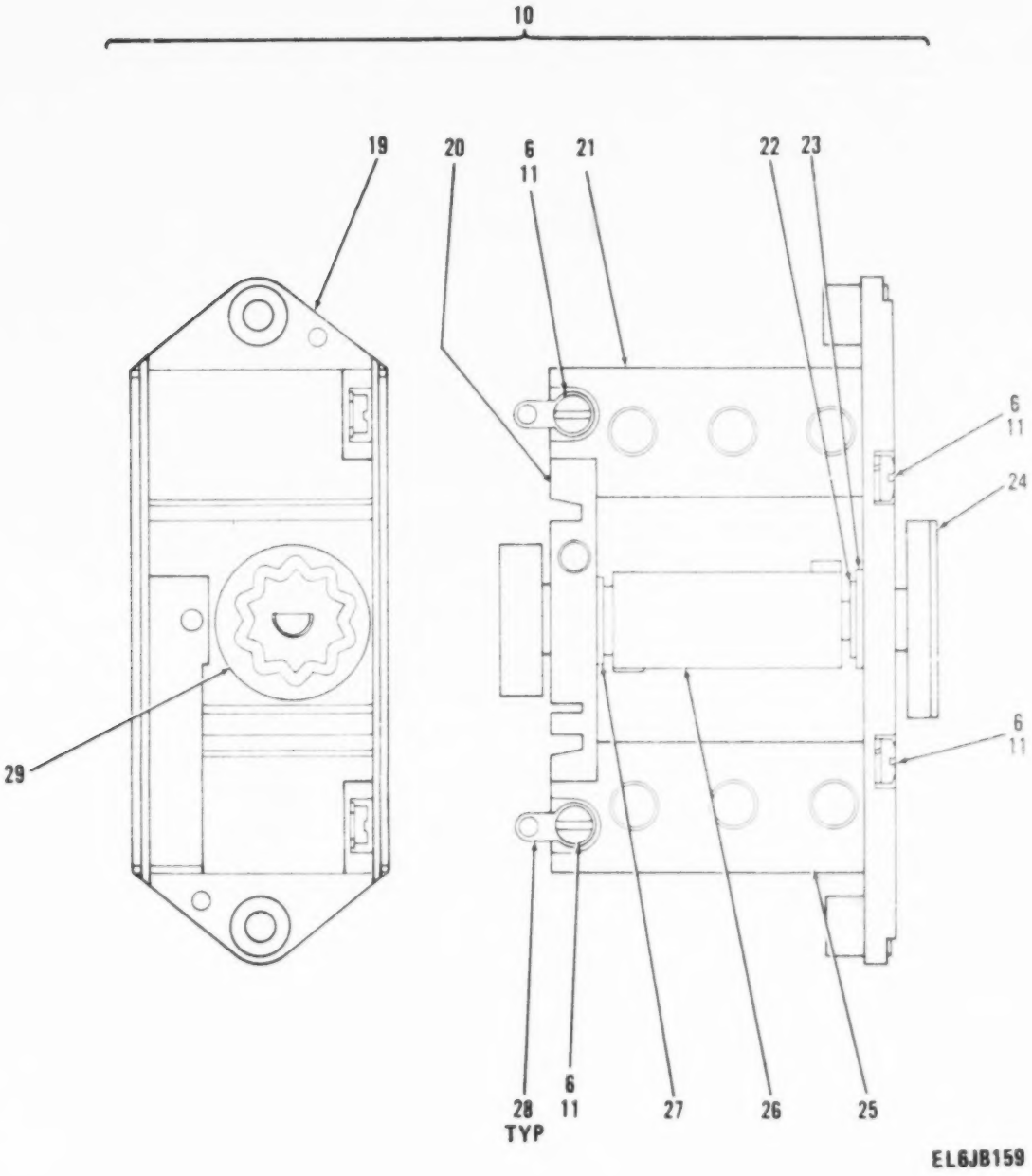

Figure 18. Switch Assembly (Sheet 2 of 3).

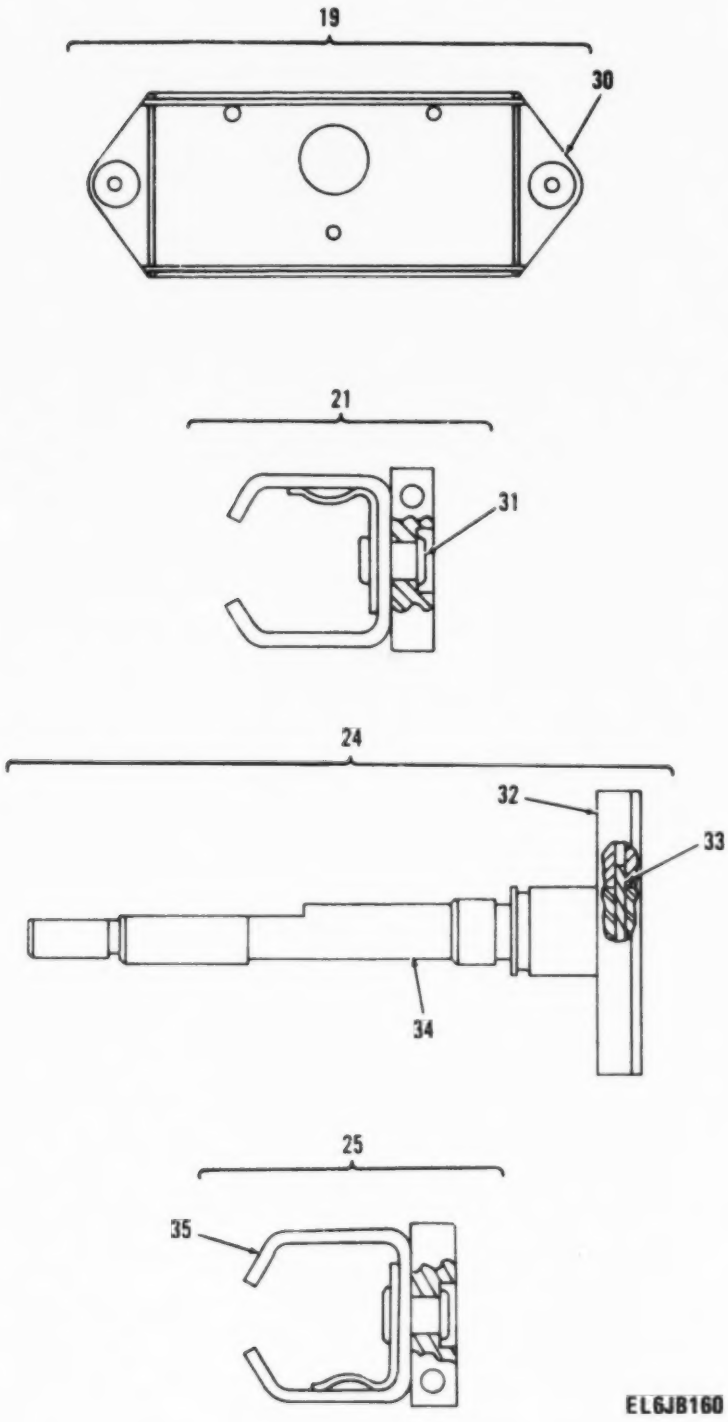

Figure 18. Switch Assembly (Sheet 3 of 3).

(1) ILLUSTRATION (a) FIG NO	(b) ITEM NO	(2) SMR CODE	(3) NATIONAL STOCK NUMBER	(4) FSCM	(5) PART NUMBER	(6) DESCRIPTION USABLE ON CODE	(7)	(8)
						GROUP 01010203 SWITCH ASSY		
						SM-D-414463		
						SM-D-921138 (A-MOL)		
18	1	XDDZZ		80063	SM-B-414468	HOLDER ASSY	EA	1
18	2	PADZZ	5930-00-089-7995	80063	SM-D-414465	ARM,SWITCH,ACTUATOR	EA	1
18	3	PADZZ		80063	SM-C-414492	BLOCK ASSY	EA	1
18	4	PADZZ	5820-00-858-6478	80063	SM-C-414466	ACTUATOR,CONTACT	EA	1
18	5	XDDZA		43710	SM-D-414467	CONTROL	EA	1
18	6	PADZZ	5310-00-943-5060	96906	MS35338-39	WASHER,LOCK	EA	1
18	7	PADZZ	5305-00-762-7482	96906	MS35206-202	SCREW,MACHINE	EA	1
18	8	PADZZ		96906	MS35223-4	SCREW,MACHINE	EA	1
18	9	PADZZ	5305-00-983-6730	96906	MS35206-219	SCREW,MACHINE	EA	1
18	10	XADZZ		80063	SM-D-414473	PLATE ASSY	EA	1
18	11	PADZZ	5305-00-054-5637	96906	MS51957-3	SCREW,MACHINE	EA	1
18	12	PADZZ	5305-00-853-6513	80063	SM-C-413531-2	SCREW,EXTERNALLY RE	EA	1
18	13	XDDZZ		80063	SM-C-414471	BRACKET	EA	1
18	14	XDDZZ		80063	SM-B-414471	SPRING	EA	1
18	15	XDDZZ		80063	SM-B-414475	HOLDER	EA	1
18	16	XDDZZ		08544	SE36CO PL	EYELET,MTL	EA	1
18	17	XDDZZ		80063	SM-B-414494	PIN,SHLDR	EA	1
18	18	XDDZZ		80063	SM-C-414498	BLOCK	EA	1
18	19	XDDZZ		80063	SM-B-414478	PLATE ASSY	EA	1
18	20	XDDZZ		80063	SM-C-414477	PLATE	EA	1
18	21	XADZZ		80063	SM-B-414461	HOLDER ASSEMBLY,CMT	EA	1
18	22	PADZZ	5365-00-550-5937	79136	5123-25-H	RING,RETAINING	EA	1
18	23	XDDZZ		38443	FC-1624-FF	BEARING,BALL	EA	1
18	24	XADZZ		80063	SM-C-414486	SHAFT ASSY	EA	1
18	25	PADZZ	5955-00-250-1110	80063	SM-B-414490	HOLDER ASSEMBLY,CMT	EA	1
18	26	PADZZ		80063	SM-C-414475	CAM	EA	1
18	27	XDDZZ		38443	FC-1220-FF	BEARING,BALL	EA	1
18	28	PADZZ	5940-00-828-8247	98278	754	TERMINAL,LUG	EA	2
18	29	PADZZ	5930-00-858-6531	80063	SM-C-414476	CAM,CONTROL	EA	1
18	30	XDDZZ		80063	SM-D-414480	PLATE	EA	1
18	31	XDDZZ		08544	SE36CO PL	EYELET,MTLC	EA	3
18	32	XDDZZ		80063	SM-C-414489	COUPLER	EA	1
18	33	PADZZ		96906	MS171434	PIN,SPRING	EA	1
18	34	XDDZZ		80063	SM-C-414488	SHAFT,SHLDR	EA	1
18	35	XDDZZ		80063	SM-C-414483-2	HOLDER	EA	1

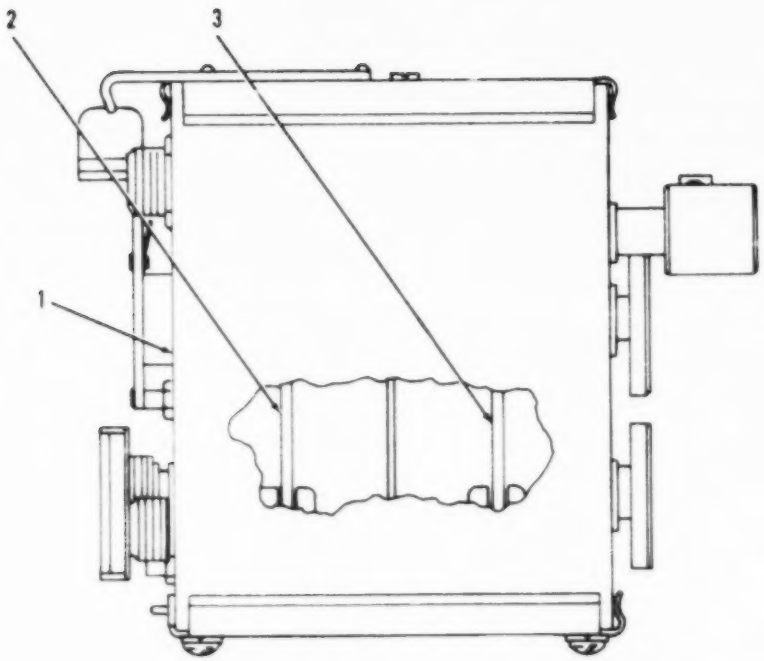

EL6JB161

Figure 19. Oscillator-Buffer Assembly

(1) ILLUSTRATION (a) FIG NO	(1) ILLUSTRATION (b) ITEM NO	(2) SMR CODE	(3) NATIONAL STOCK NUMBER	(4) FSCM	(5) PART NUMBER	(6) DESCRIPTION / USABLE ON CODE	U/M	(7) QTY INC IN UNIT
						GROUP 010103 OSCILLATOR-BUFFER		
						A6000 AND A6000A		
						SM-D-416342		
19	1	PAFOA	5820-00-878-4608	80063	SM-D-188989	CASE,AMPLIFIER.....	EA	1
19	2	PAFOO	5821-00-129-6727	80063	SM-D-374993	ELECTRONIC COMPONEN.....	EA	1
19	3	PAFOO	5820-00-884-2481	80063	SM-D-374996	CIRCUIT CARD ASSEMB.....	EA	1

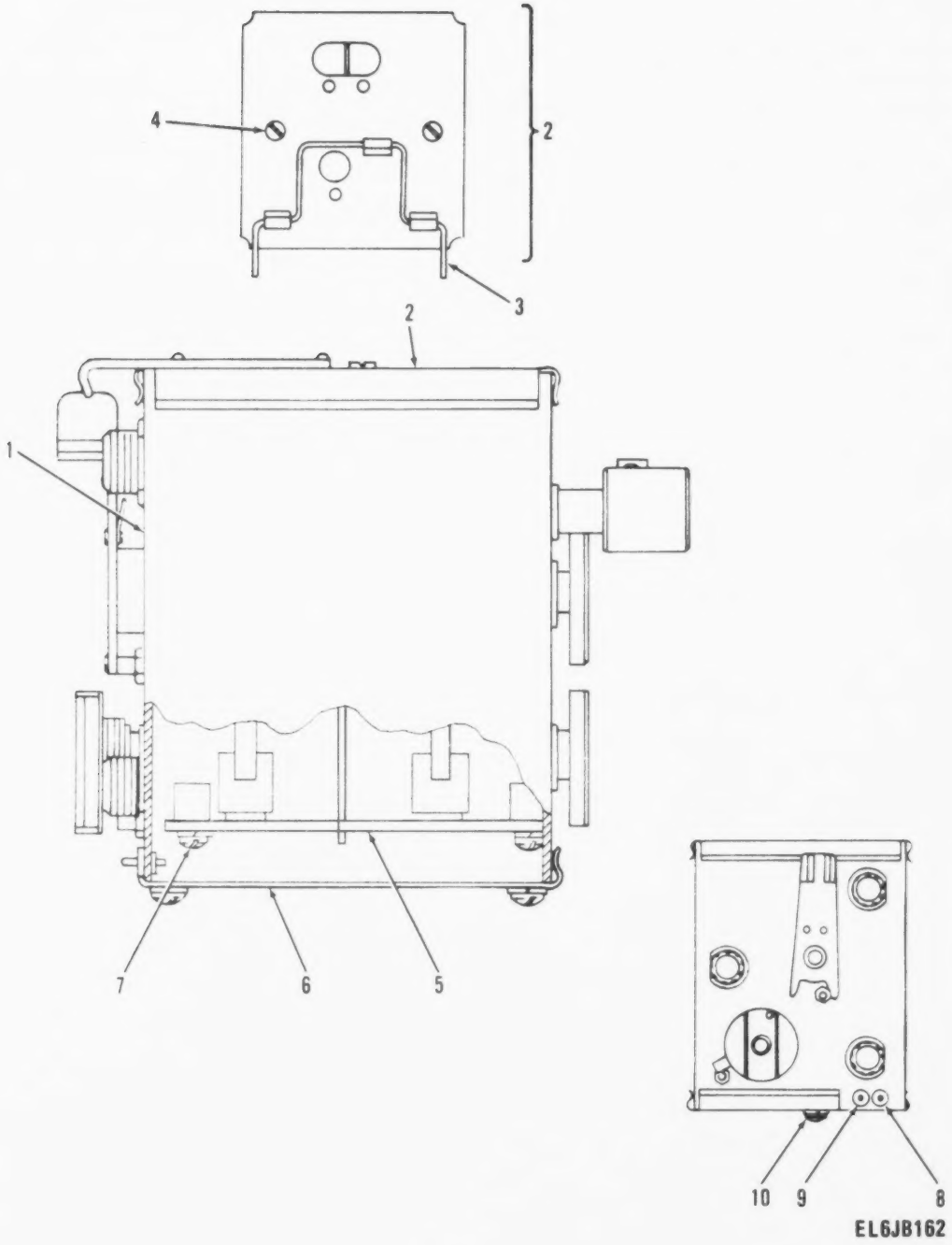

Figure 20. Oscillator-Buffer Assembly, Oscillator-Buffer and Parent Board.

(1) ILLUSTRATION (A) FIG NO	(1) ILLUSTRATION (B) ITEM NO	(2) SMR CODE	(3) NATIONAL STOCK NUMBER	(4) FSCM	(5) PART NUMBER	(6) DESCRIPTION / USABLE ON CODE	(7) U/M	(8) QTY INC IN UNIT
						GROUP 01010301 OSCILLATOR-BUFFER		
						(OSC-BUFF AND PARENT 801		
						SM-D-188989		
20	1	PAHDA	5820-00-878-4608	80063	SM-D-416343	CASE,AMPLIFIER	EA	1
20	2	PAFZA	5820-01-129-1480	80063	SM-C-374931	COVER,ACCESS	EA	1
20	3	PAFZZ		80063	SM-B-374947	BAIL	EA	1
20	4	PAFZZ	5305-00-151-6200	80063	SM-B-374881	SCREW,EXTERNALLY RE	EA	2
20	5	PAHZZ	5820-00-871-5015	80063	SM-D-416335	CIRCUIT CARD ASSEMB	EA	1
20	6	PAFZA		80063	SM-C-374935	COVER	EA	1
20	7	PAHZZ	5305-00-151-6891	80063	SM-B-416344-2	SCREW,MACHINE	EA	2
20	8	PAHZZ	5940-00-391-8794	81349	FT033B01	TERMINAL,FEEDTHRU,I	EA	1
20	9	PAHZZ	5940-00-937-8028	98291	FTSM-14-P20-BLK	TERMINAL,FEEDTHRU,I	EA	1
20	10	XBFZZ	5305-00-151-6886	78189	61-040441-40-4702-4802	SCREW ASSEM WASH	EA	2

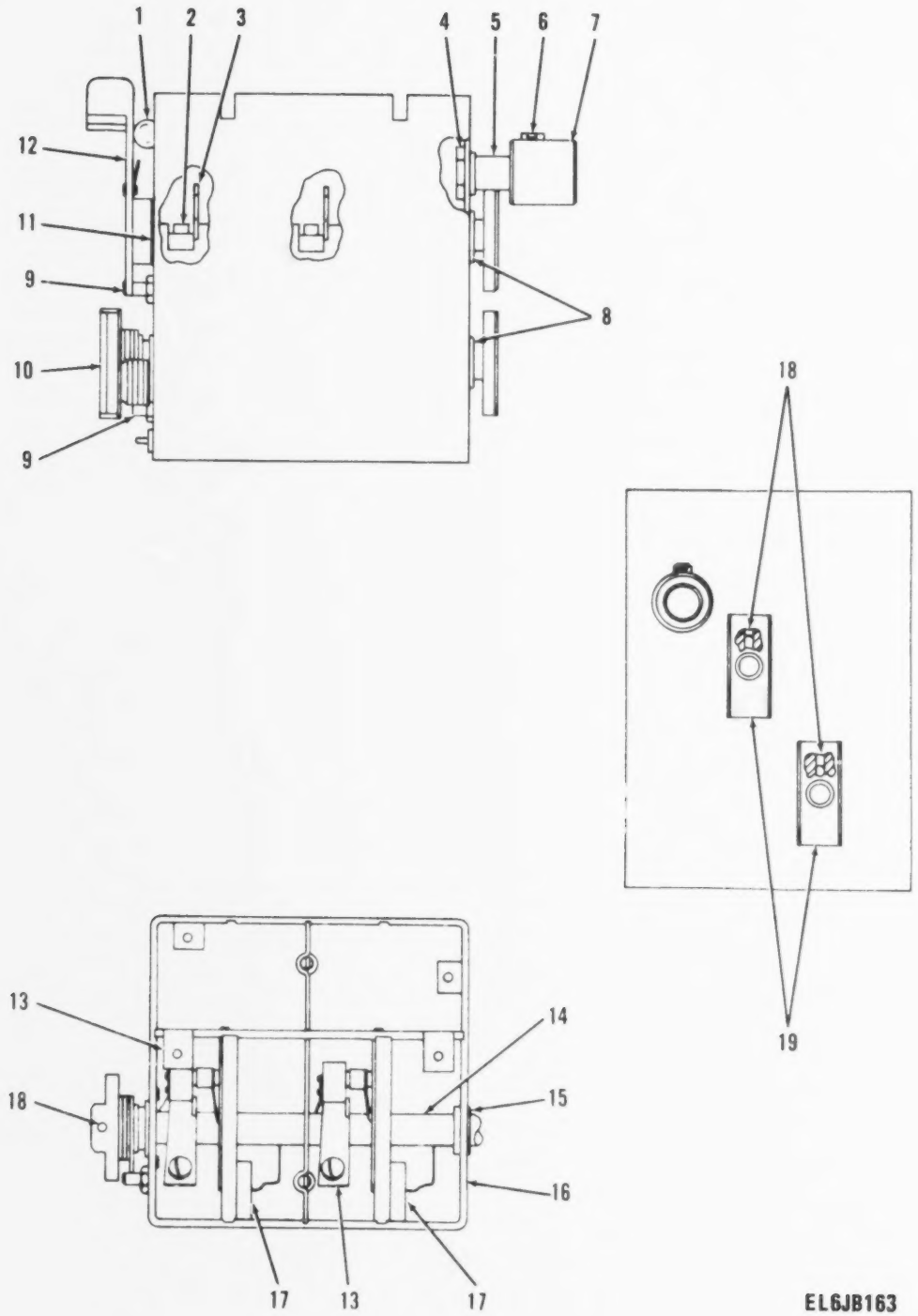

Figure 22. Oscillator-Buffer, Case and Tuner (Sheet 1 of 2).

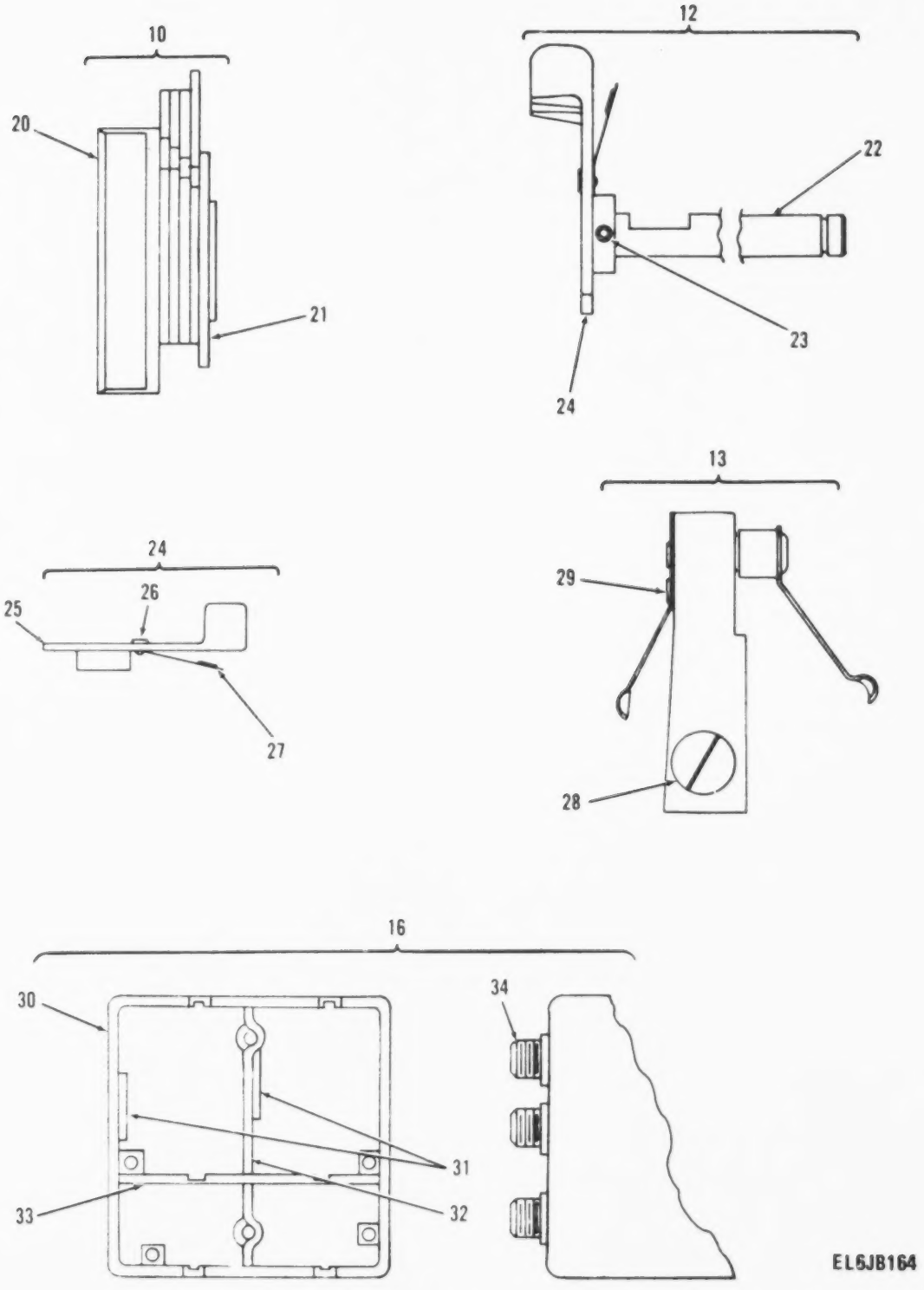

Figure 22. Oscillator-Buffer, Case and Tuner (Sheet 2 of 2).

(1) ILLUSTRATION (a) FIG NO	(1) ILLUSTRATION (b) ITEM NO	(2) SMR CODE	(3) NATIONAL STOCK NUMBER	(4) FSCM	(5) PART NUMBER	(6) DESCRIPTION / USABLE ON CODE	(7) U/M	(8) QTY INC IN UNIT
						GROUP 0101030102 OSCILLATOR-BUFFER (CASE AND TUNER) SM-D-416343		
22	1	PAHZZ	3110-00-838-5033	96906	MS134354	BALL,BEARING	EA	1
22	2	PADZZ	5305-00-060-3225	03038	LL51957-12	SCREW,SELF-LOCKING	EA	2
22	3	XBDZZ		80063	SM-B-374896	ARM	EA	2
22	4	PADZZ	5305-00-139-7070	80063	SM-B-374892	SCREW,MACHINE	EA	1
22	5	XDDZZ		80063	SM-C-374890	STUD	EA	1
22	6	PADZZ	5305-00-551-0156	96906	MS51021-31	SETSCREW	EA	1
22	7	XDDZZ		80063	SM-B-374888	SLEEVE	EA	1
22	8	PADZZ	5365-00-550-5937	96906	MS16632-4025	RING,RETAINING	EA	2
22	9	PAHZZ	5315-00-158-4406	80063	SM-B-374858	PIN,SHOULDER,HEADLE	EA	2
22	10	PAHZZ	5820-00-832-5524	80063	SM-C-374898	COUPLING AND STOP A	EA	1
22	11	XDDZZ		80063	SM-B-374986	WASHER	EA	1
22	12	PADZZ	5820-00-832-5525	80063	SM-C-374923	ARM AND SHAFT ASSEM	EA	1
22	13	PADZZ	5820-00-832-5505	80063	SM-C-374899	CONTACT AND ROTOR A	EA	2
22	14	PADZZ		80063	SM-D-374916-3	SHAFT,STR HDLS	EA	1
22	15	XDDZZ		40920	S614FCHHELO-1	BEARING,BALL	EA	2
22	16	XBDZA		80063	SM-D-374937	CASE	EA	1
22	17	PADZA	5950-00-891-9150	80063	SM-D-374912	COIL,ASSEMBLY	EA	2
22	18	PAHZZ	5315-00-844-5644	96906	MS16562-194	PIN,SPRING	EA	1
22	19	PAHZZ	4730-01-125-0436	80063	SM-B-374915	COUPLING HALF,SHAFT	EA	2
22	20	PAHZZ	3040-01-130-4757	80063	SM-C-374955	COUPLING HALF,SHAFT	EA	1
22	21	PAHZZ	5365-00-286-8718	96906	MS16633-4037	RING,RETAINING	EA	1
22	22	XDDZZ		80063	SM-C-374887	SHAFT,STRAIGHT	EA	1
22	23	PADZZ	5315-00-882-1438	96906	MS16562-193	PIN,SPRING	EA	1
22	24	XDDZZ		80063	SM-C-374895	ARM ASSY	EA	1
22	25	XDDZZ		80063	SM-C-374921	ARM	EA	1
22	26	PADZZ	5320-00-821-2831	96906	MS16535-11	RIVET,TUBULAR	EA	2
22	27	XDDZZ		80063	SM-B-374928	SPRING	EA	1
22	28	PADZZ	5305-00-139-7016	80063	SM-B-374959	SCREW,MACHINE	EA	1
22	29	PADZZ	5320-00-952-7864	96906	MS16535-13	RIVET,TUBULAR	EA	1
22	30	XBDZA		80063	SM-D-374937-1	CASE	EA	1
22	31	XBDZA		80063	SM-D-374937-4	RING	EA	2
22	32	XBDZA		80063	SM-D-374937-3	PARTITION	EA	1
22	33	XBDZA		80063	SM-D-374937-2	PARTITION	EA	1
22	34	XBDZZ		80063	SM-D-374937-5	STUD	EA	3

LEGEND

REF DES	ITEM NO	REF DES	ITEM NO	REF DES	ITEM NO	REF DES	ITEM NO
CR6301	1	C6308	7	J6002	13	R6302	21
CR6302	1	C6309	3	L6301	14	R6303	22
C6301	2	C6310	8	L6302	15	R6304	22
C6302	3	C6311	9	L6303	16	R6305	23
C6303	3	C6312	10	L6304	17	R6306	24
C6304	3	C6313	11	L6305	18	R6307	25
C6305	4	C6314	11	Q6301	19	R6308	26
C6306	5	C6315	12	R6301	20	S6301	27
C6307	6						

PREFIX ALL REFERENCE DESIGNATIONS WITH A6000A6300

EL6JB165

Figure 23. Electronic Component, Oscillator Assembly (Sheet 1 of 5).

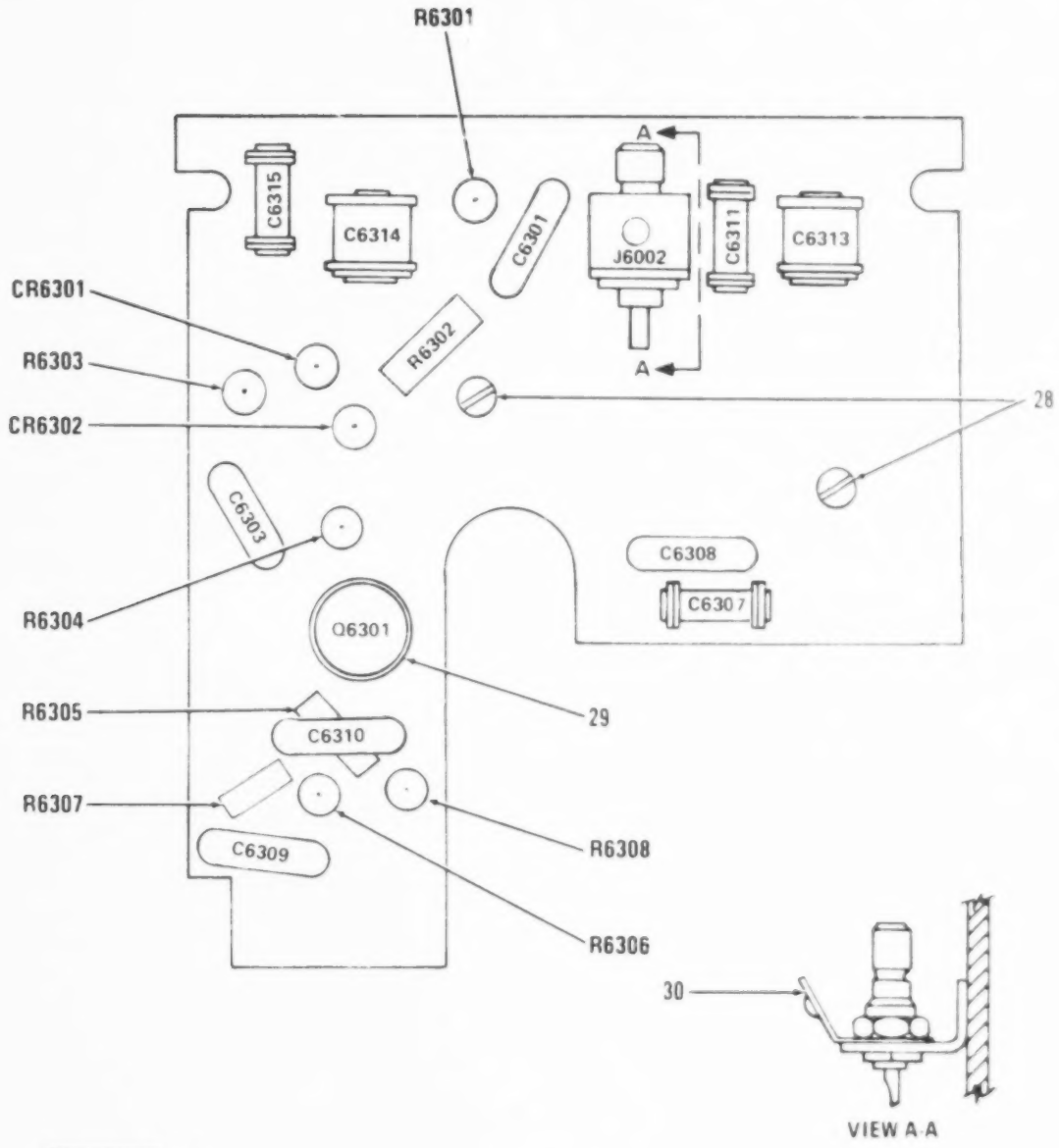

Figure 23. Electronic Component, Oscillator Assembly (Sheet 2 of 5).

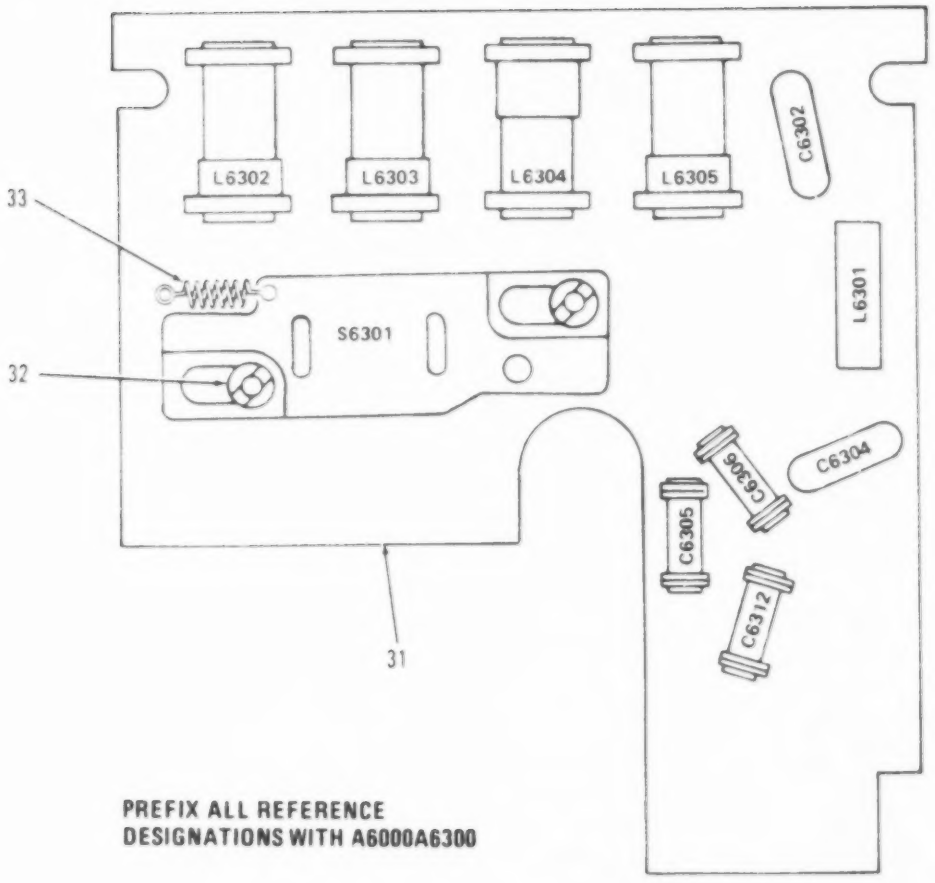

Figure 23. Electronic Component, Oscillator Assembly (Sheet 3 of 5).

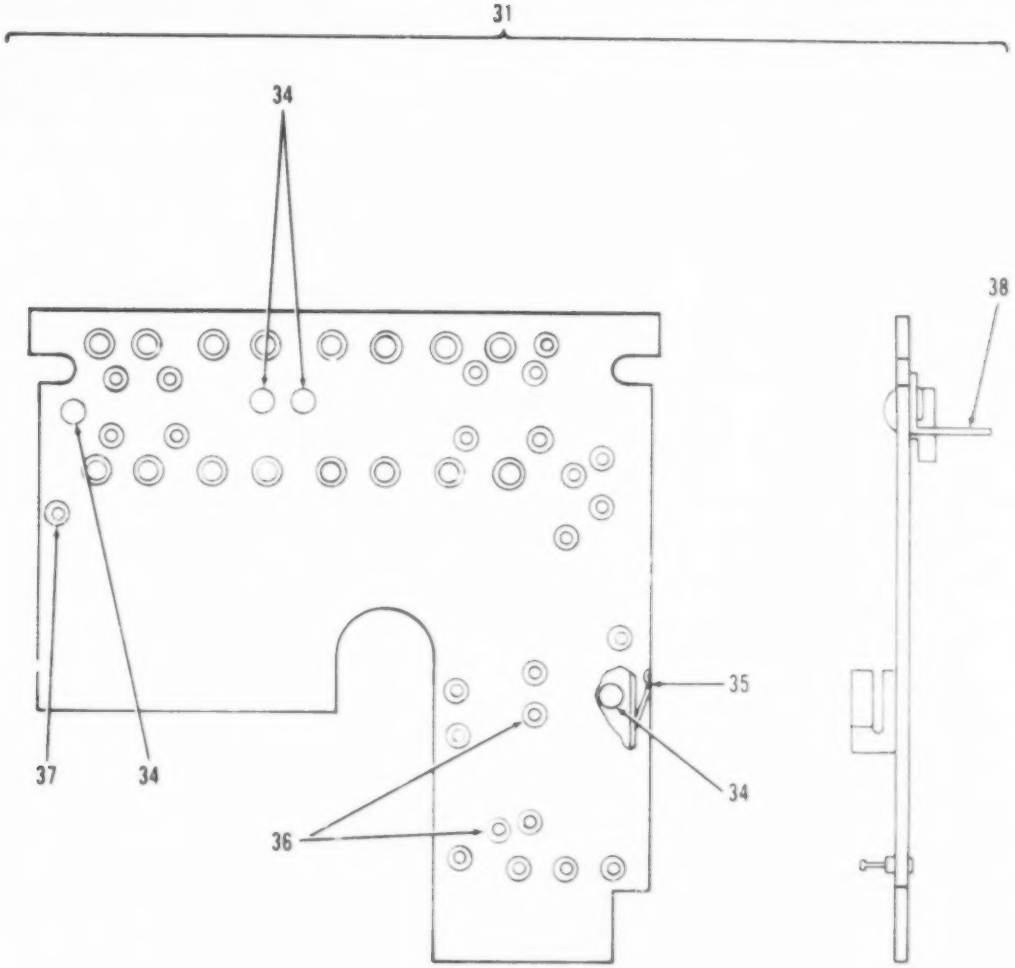

Figure 23. Electronic Component, Oscillator Assembly (Sheet 4 of 5).

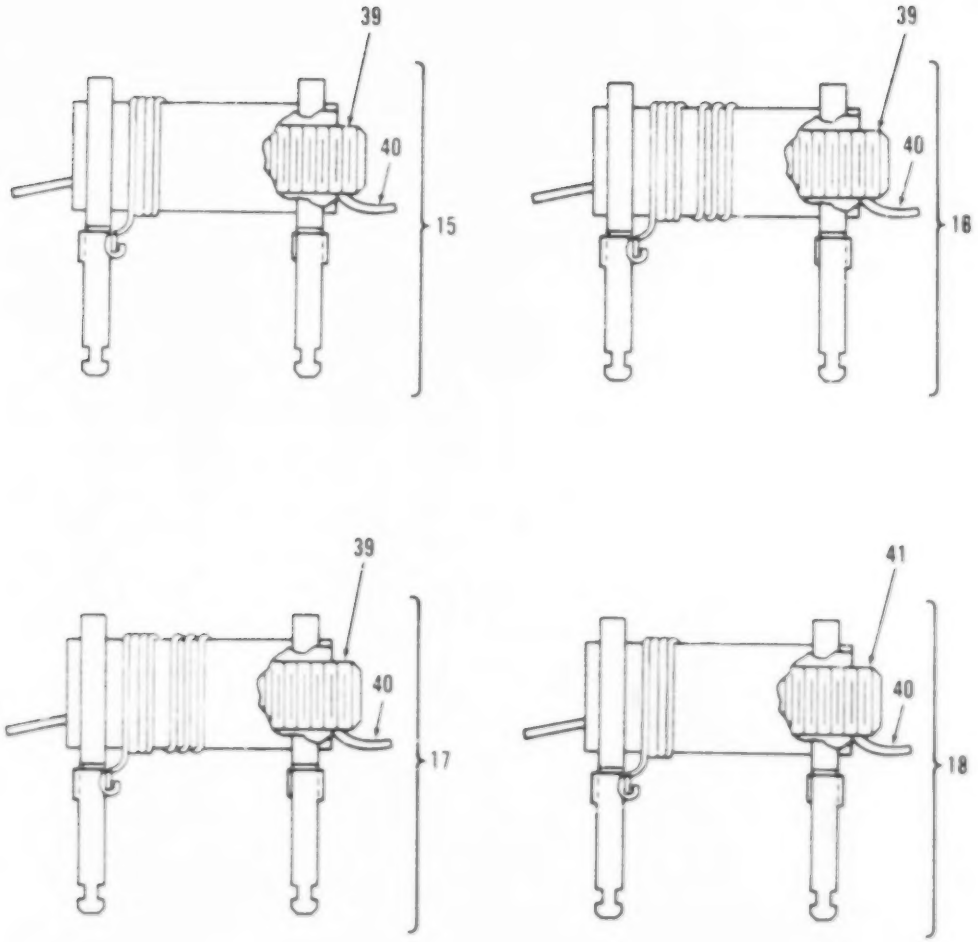

Figure 23. Electronic Component, Oscillator Assembly (Sheet 5 of 5).

(1) ILLUSTRATION (A) FIG NO.	(1) ILLUSTRATION (B) ITEM NO.	(2) SMR CODE	(3) NATIONAL STOCK NUMBER	(4) FSCM	(5) PART NUMBER	(6) DESCRIPTION USABLE ON CODE	(7) U/M	(8) QTY INC IN UNIT
						GROUP 01010302 ELECTRONIC COMPONENT		
						TOSCELLATOR ASSY) A6300		
						AND A6300A SM-D-376993		
23	1	PAOZZ	5961-00-938-5250	16352	1N3551	SEMICONDUCTOR DEVIC	EA	2
23	2	PAOZZ	5910-01-044-5615	81349	CMR05E680GDR	CAPACITOR,FIXED,MIC	EA	1
23	3	PAOZZ	5910-00-938-7506	18796	08010114XF0 132X	CAPACITOR,FIXED,CER .001 UF,PORM 10 PCT,500 VDCW	EA	4
23	4	PAOZZ	5910-00-681-7617	81349	CC22CK020C	CAPACITOR,FIXED,CER	EA	1
23	5	PAOZZ	5910-00-806-0668	81349	CC22CH7R0D	CAPACITOR,FIXED,CER	EA	1
23	6	PAOZZ	5910-00-938-7517	72982	301655P2G0170G	CAPACITOR,FIXED,CER 17.0 UUF,PORM 2 PCT,500 VDCW,N150 TEMP COEF	EA	1
23	7	PAOZZ	5910-01-031-0446	81349	CMR05E560GDR	CAPACITOR,FIXED,MIC	EA	1
23	8	PAOZZ	5910-01-030-1770	81349	CMR05F151GDR	CAPACITOR,FIXED,MIC	EA	1
23	9	PAOZZ	5910-00-938-7518	72982	301-011P3A02590	CAPACITOR,FIXED,CER .1 UUF,PORM .1 UUF,500 VDCW,NPO TEMP COEF	EA	1
23	10	PAOZZ	5910-00-702-9790	81349	CC22UJ060C	CAPACITOR,FIXED,CER	EA	1
23	11	PAOZZ	5910-00-924-4307	81349	PC5125R5	CAPACITOR,VARIABLE	EA	2
23	12	PAOZZ		81349	CC20TH2D0	CAPACITOR,FIXED CER	EA	1
23	13	PAOZA		02660	ZP-3	CONNECTOR,RECEPTACL	EA	2
23	14	PAOZZ		97469	10126-65	COIL,RADIO FREQUENC 2.9 UH PORM 5 PCT INDUCTANCE AT 7.9 MHZ	EA	1
23	15	PAOZZ	5950-01-013-0260	80063	SM-C-416332	COIL,RADIO FREQUENC 0.820 UH MIN,1.760 UH MAX INDUCTANCE AT 25 MHZ	EA	1
23	16	PAOZZ	5950-01-098-7909	80063	SM-C-416321-2	COIL,RADIO FREQUENC .127 UH MIN,.143 UH MAX INDUCTANCE AT 25 MHZ	EA	1
23	17	PAOZZ	5950-01-011-4248	80063	SM-C-416350-1	COIL,RADIO FREQUENC .150 UH MIN,.170 UH MAX INDUCTANCE AT 25 MHZ	EA	1
23	18	PAOZZ	5950-01-012-1369	80063	SM-C-416327-2	COIL,RADIO FREQUENC 15.0 UH MIN,21.0 UH MAX INDUCTANCE AT 2.5 MHZ	EA	1
23	19	AAOZZ		09235	T-2176	TRANSISTOR	EA	1
23	20	PAOZZ	5905-00-116-8516	81349	RCR07G102J	RESISTOR,FIXED,COMP	EA	1
23	21	PAOZZ	5905-00-111-1874	81349	RCR07G912J	RESISTOR,FIXED,COMP	EA	1
23	22	PAOZZ	5905-00-141-0F17	81349	RCR07G473J	RESISTOR,FIXED,COMP	EA	2
23	23	PAOZZ	5905-00-110-7620	81349	RCR07G222J	RESISTOR,FIXED,COMP	EA	1
23	24	PAOZZ	5905-00-116-5363	81349	RCR07G152J	RESISTOR,FIXED,COMP	EA	1
23	25	PAOZZ	5905-00-126-6663	81349	RCR07G332J	RESISTOR,FIXED,COMP	EA	1
23	26	PAOZZ	5905-00-111-4736	81349	RCR07G470J	RESISTOR,FIXED,COMP	EA	4
23	27	PAOZA	5821-00-990-6461	80063	SM-C-416300	SWITCH SUBASSEMBLY	EA	1
23	28	PAOZZ	5305-00-137-7929	80063	SM-B-416361	SCREW,STEP-LOCKING	EA	2
23	29	PAOZZ	5961-01-100-3869	80063	SM-B-413797	RETAINER,TRANSISTOR	EA	1
23	30	AOOZA		80063	SM-C-376886	CONTACT,ELEC	EA	1
23	31	AOOOA		80063	SM-D-416395	OSCILLATOR BD ASSY	EA	1
23	32	PAOZZ		80063	SM-B-416361	INSERT SCREW THREAD	EA	2
23	33	XOOZZ		80063	SM-B-401749	SPRING,HELICAL	EA	1
23	34	PAOZZ	5320-00-081-7416	96906	MS16535-22	RIVET,TUBULAR	EA	2

(1) ILLUSTRATION (a) FIG NO	(b) ITEM NO	(2) SMR CODE	(3) NATIONAL STOCK NUMBER	(4) FSCM	(5) PART NUMBER	(6) DESCRIPTION USABLE ON CODE	(7) U/M	(8) QTY INC IN UNIT
23	35	XDDZA		80063	SM-8-416339-1	CONTACT,ELEC	EA	2
23	36	PADZZ	5940-00-082-5002	81349	SEL6XC01	TERMINAL,STUD	EA	2
23	37	XDDZZ		71279	3653-2-01	TERMINAL,STUD	EA	1
23	38	XDDZZ		80063	SM-8-416356-1	BRACKET	EA	1
23	39	PAFZZ	5950-00-170-4153	95566	F80460-1810-0	CORE,ADJUSTABLE TUN	EA	1
23	40	PAFZZ		80063	SM-8-481760	PLASTIC STRIP	EA	1
23	41	PAFZZ	5950-00-904-1057	71279	3226-3	CORE,ADJUSTABLE TUN	EA	1

88/(89 BLANK)

best copy available

LEGEND

REF DES	ITEM NO	REF DES	ITEM NO	REF DES	ITEM NO	REF DES	ITEM NO
C6401	1	C6409	6	L6404	13	R6406	19
C6402	2	C6410	8	L6405	14	R6407	20
C6403	3	J6001	9	Q6401	15	R6408	16
C6404	4	J6003	9	Q6402	15	R6409	21
C6405	5	L6401	10	R6401	16	R6410	22
C6406	6	L6402	11	R6402	17	S6401	23
C6407	7	L6403	12	R6403	18	T6401	24
C6408	8						

PREFIX ALL REFERENCE DESIGNATIONS WITH A6000A6400

EL6JB170

Figure 24. Buffer Board (Sheet 1 of 5).

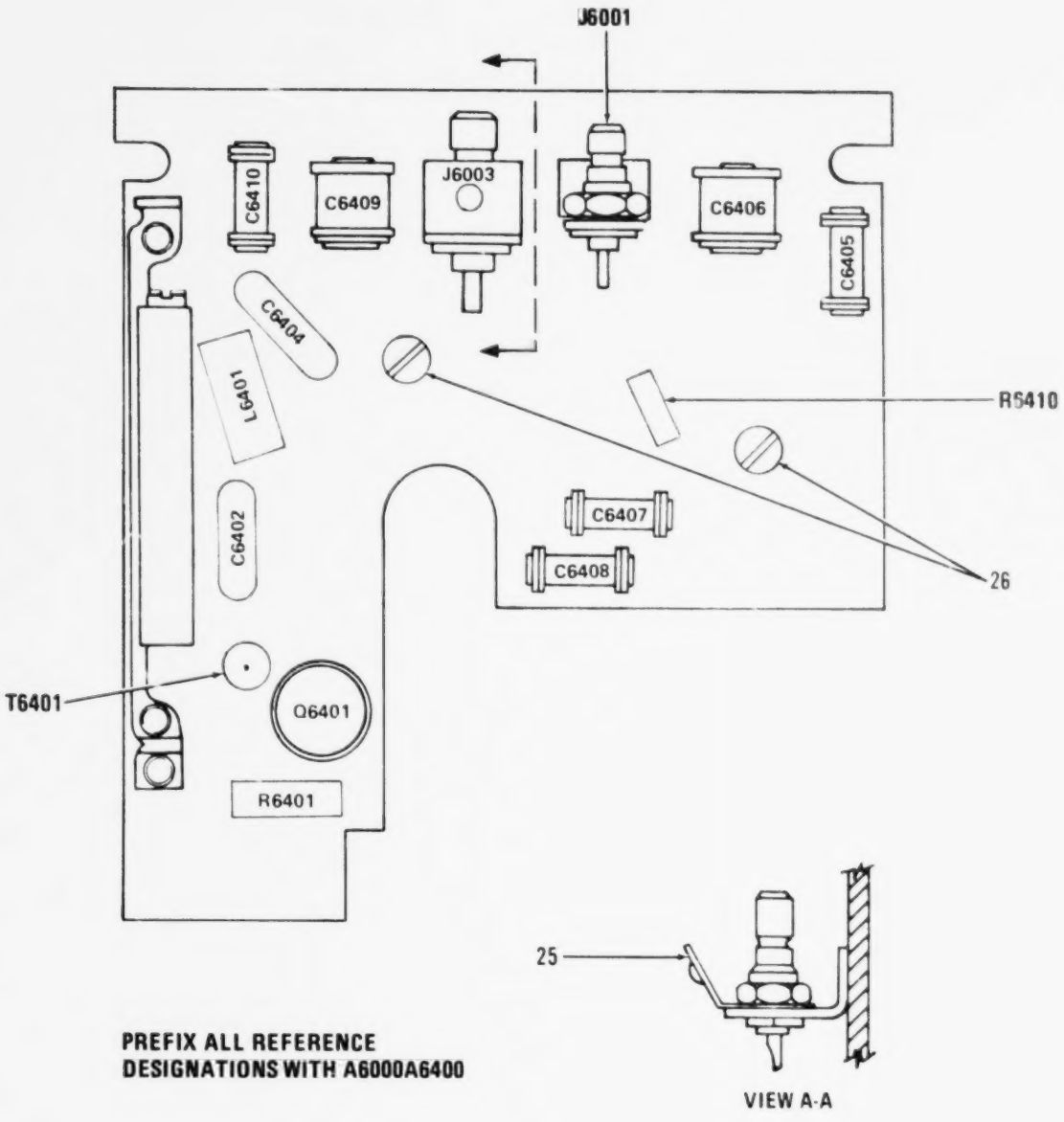

Figure 24. Buffer Board (Sheet 2 of 5).

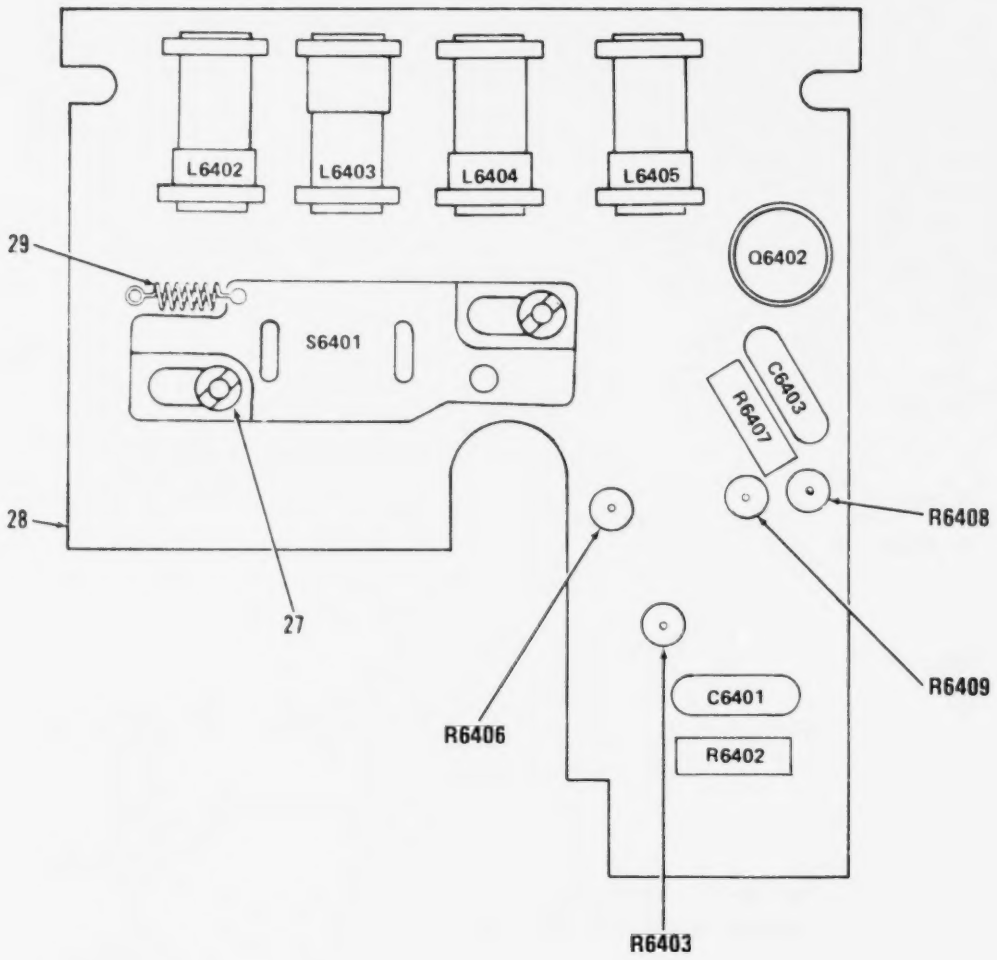

Figure 24. Buffer Board (Sheet 3 of 5).

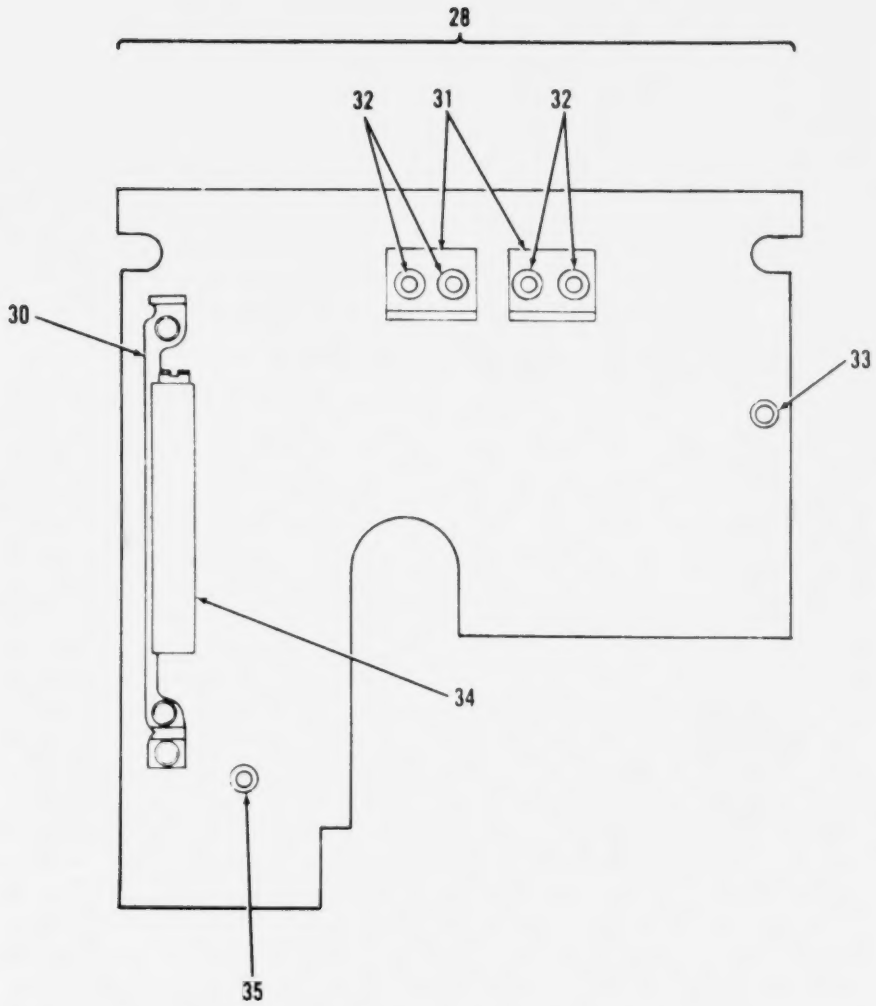

Figure 24. Buffer Board (Sheet 4 of 5).

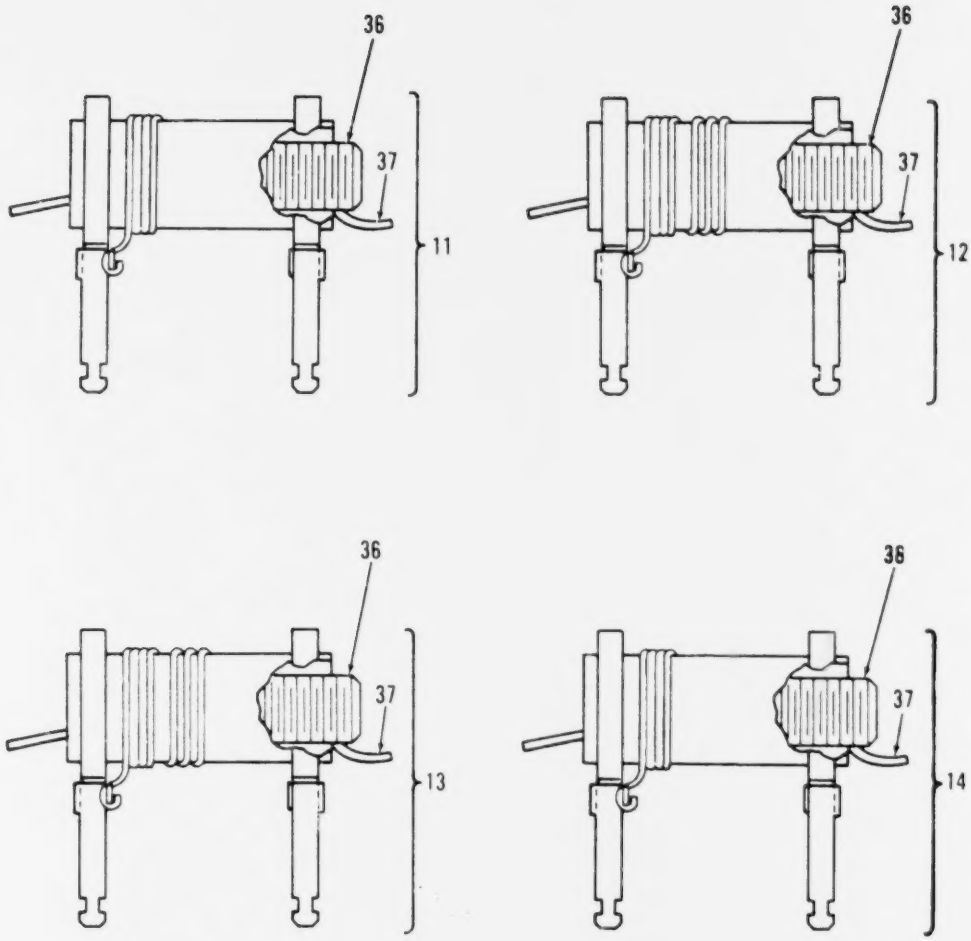

Figure 24. Buffer Board (Sheet 5 of 5).

(1) ILLUSTRATION (a) FIG NO	(1) ILLUSTRATION (b) ITEM NO	(2) SMR CODE	(3) NATIONAL STOCK NUMBER	(4) FSCM	(5) PART NUMBER	(6) DESCRIPTION USABLE ON CODE	(7) U M	(8) QTY INC IN UNIT
						GROUP 01010303 BUFFER BOARD		
						A6400 AND A6400A		
						SM-D-374996		
24	1	PADZZ	5910-00-464-8946	72982	855-027-X5T0472M	CAPACITOR,FIXED,CER .0047 UF PORM 20 PCT,200 VDCW.....	EA	1
24	2	PADZZ	5910-01-044-5615	81349	CMR05E680GDDR	CAPACITOR,FIXED,MIC.....	EA	1
24	3	PADZZ	5910-00-938-7506	18796	0801011X5F0 102K	CAPACITOR,FIXED,CER .001 UF,PORM 10 PCT,500 VDCW.....	EA	1
24	4	PADZZ	5910-01-043-6892	81349	CMR05F101GDDR	CAPACITOR,FIXED,MIC.....	EA	1
24	5	PADZZ	5910-00-583-1589	81349	CC20CH040C	CAPACITOR,FIXED,CER.....	EA	1
24	6	PADZZ	5910-00-924-4307	81349	PC51J5R5	CAPACITOR,VARIABLE,.....	EA	2
24	7	PADZZ	5910-00-726-8695	81349	CC22CH100C	CAPACITOR,FIXED,CER.....	EA	1
24	8	PADZZ	5910-00-615-9452	81349	CC22CH180G	CAPACITOR,FIXED,CER.....	EA	2
24	9	PADZA		02660	27-3	CONNECTOR,RECEPTACL.....	EA	2
24	10	PADZZ	5950-00-964-7450	96906	MS75008-33	COIL,RADIO FREQUENC.....	EA	1
24	11	PADZZ	5950-01-013-0280	80063	SM-C-416332	COIL,RADIO FREQUENC 0.620 UH MIN,0.760 UH MAX INDUCTANCE AT 25 MHZ.....	EA	1
24	12	PADZZ	5950-01-098-7909	80063	SM-C-416321-2	COIL,RADIO FREQUENC .127 UH MIN,.143 UH MAX INDUCTANCE AT 25 MHZ.....	EA	1
24	13	PADZZ	5950-01-011-4249	80063	SM-C-416352-2	COIL,RADIO FREQUENC 0.164 UH MIN,0.188 UH MAX INDUCTANCE AT 25 MHZ.....	EA	1
24	14	PADZZ	5950-01-011-4808	80063	SM-C-416327-3	COIL,RADIO FREQUENC 3.4 UH MIN,4.35 UH MAX INDUCTANCE AT 7.9 MHZ.....	EA	1
24	15	XADZZ		80063	SK-A-921087	TRANSISTOR	EA	1
24	16	PADZZ	5905-00-114-5343	81349	RCR07G182JS	RESISTOR,FIXED,COMP.....	EA	2
24	17	PADZZ	5905-00-105-7764	81349	RCR07G222JS	RESISTOR,FIXED,COMP.....	EA	1
24	18	PADZZ	5905-00-119-8811	81349	RCR07G151JS	RESISTOR,FIXED,COMP.....	EA	1
24	19	PADZZ	5905-00-106-3668	81349	RCR07G220JS	RESISTOR,FIXED,COMP.....	EA	1
24	20	PADZZ	5905-00-135-3973	81349	RCR07G221JS	RESISTOR,FIXED,COMP.....	EA	1
24	21	PADZZ	5905-00-126-6683	81349	RCR07G332JS	RESISTOR,FIXED,COMP.....	EA	1
24	22	PADZZ	5905-00-113-4860	81349	RCR07G270JS	RESISTOR,FIXED,COMP.....	EA	1
24	23	PADZA	5821-00-990-6461	80063	SM-C-416300	SWITCH SUBASSEMBLY.....	EA	1
24	24	PADZZ	5950-01-011-3415	80063	SM-C-416400	TRANSFORMER,RADIO F.....	EA	1
24	25	XDDZA		80063	SM-C-374866	CONTACT,ELEC.....	EA	1
24	26	PADZZ	5305-00-137-7929	80063	SM-B-416363	SCREW,SELF-LOCKING.....	EA	2
24	27	PADZZ		80063	SM-B-416361	INSERT SCREW THREAD.....	EA	2
24	28	XDDDA		80063	SM-D-374995	BUFFER BOARD ASSY.....	EA	1
24	29	XDDZZ		80063	SM-B-481749	SPRING,HELICAL.....	EA	1
24	30	XDDZZ		80063	SM-C-416404	BRACKET.....	EA	1
24	31	XDDZZ		80063	SM-B-416356-1	BRACKET.....	EA	2
24	32	PADZZ	5320-00-081-7418	96906	MS16535-12	RIVET,TUBULAR.....	EA	4
24	33	XDDZZ		71279	3653-2-01	TERMINAL,STUD.....	EA	1
24	34	PADZZ	5905-00-838-9210	32997	220W-1-201	RESISTOR,VARIABLE,W 200 OHMS PORM 10 PCT.....	EA	1
24	35	PADZZ	5940-00-082-5002	81349	SE16XC01	TERMINAL,STUD.....	EA	1

(1) ILLUSTRATION (a) FIG NO	(1) ILLUSTRATION (b) ITEM NO	(2) SMR CODE	(3) NATIONAL STOCK NUMBER	(4) FSCM	(5) PART NUMBER	(6) DESCRIPTION USABLE ON CODE	(7) U M	(8) QTY INC IN UNIT
24	36	PAFZZ	5950-00-170-4153	95566	FB0460-1810-0	CORE,ADJUSTABLE TUN.....	EA	1
24	37	PAFZZ		80063	SM-B-481760	PLASTIC STRIP.....	EA	1
24	38	PAFZZ	5950-00-904-1057	71279	3226-3	CORE,ADJUSTABLE TUN.....	EA	1

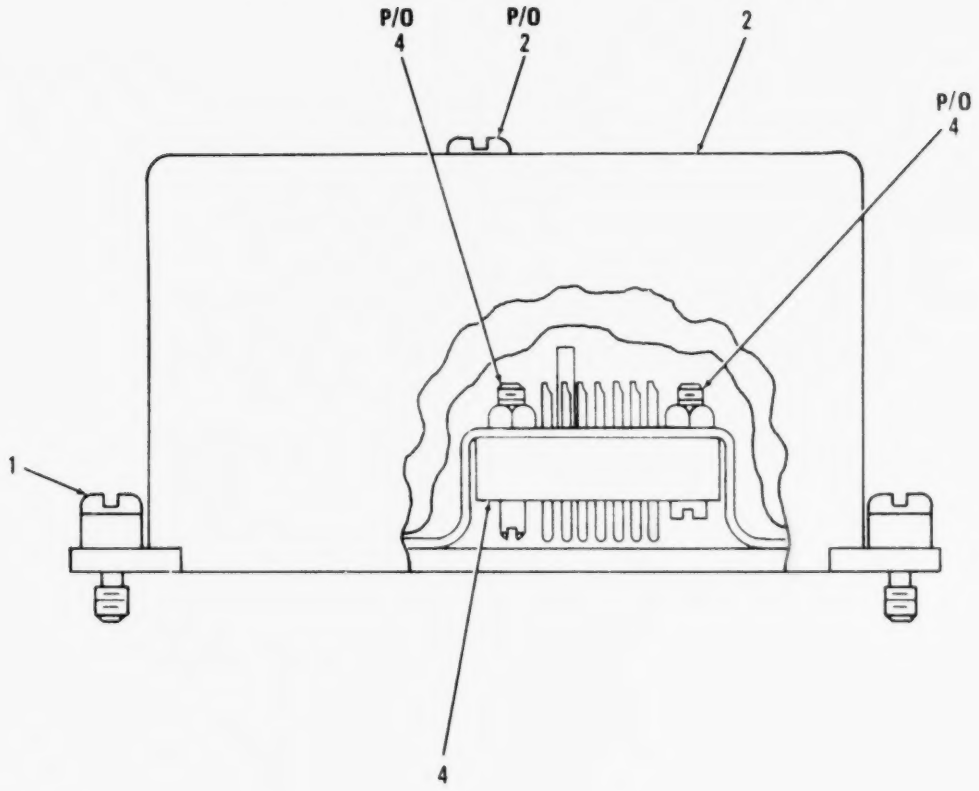

Figure 25. Null Switch Assembly (Sheet 1 of 4).

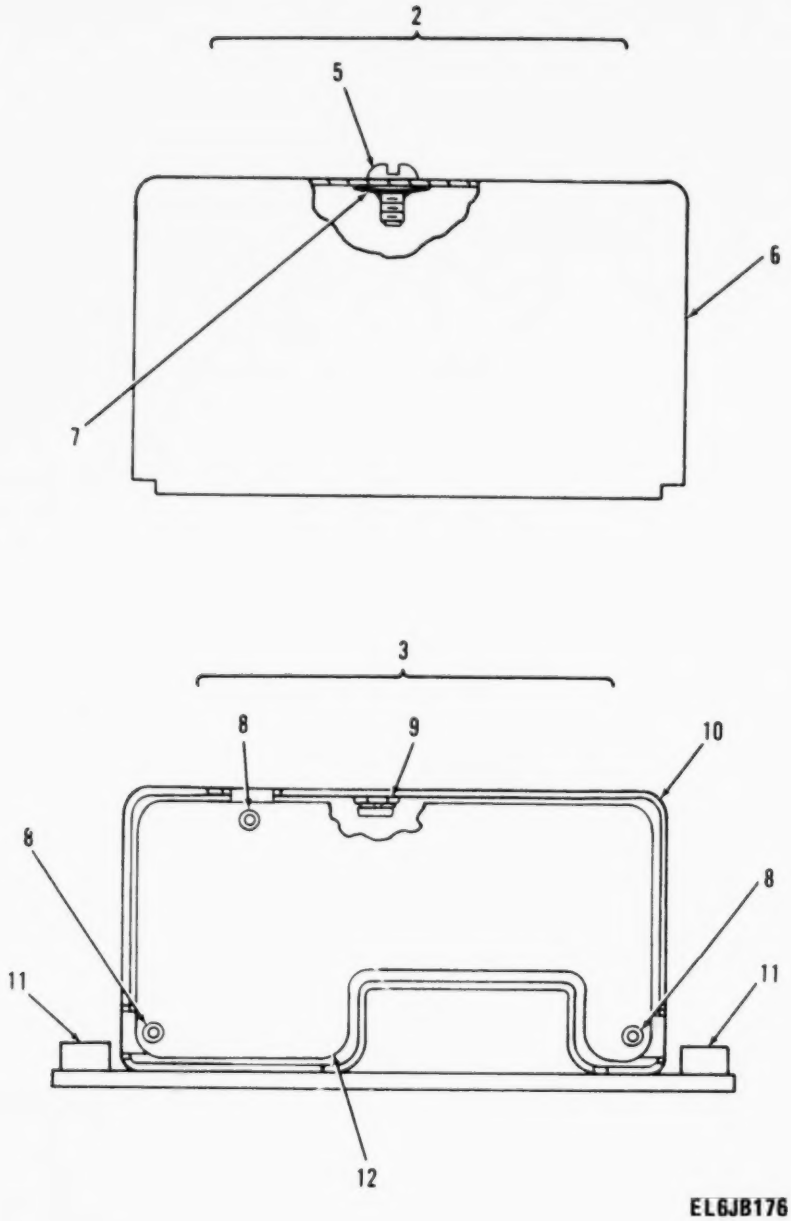

Figure 25. Null Switch Assembly (Sheet 2 of 4).

LEGEND

REF DES	ITEM NO	REF DES	ITEM NO	REF DES	ITEM NO	REF DES	ITEM NO
CR7001	14	CR7005	15	Q7001	17	R7002	19
CR7002	14	C7001	16	R7001	18	T7001	20
CR7003	15	C7002	16				

PREFIX ALL REFERENCE DESIGNATIONS WITH A7000

EL6JB177

Figure 25. Null Switch Assembly (Sheet 3 of 4).

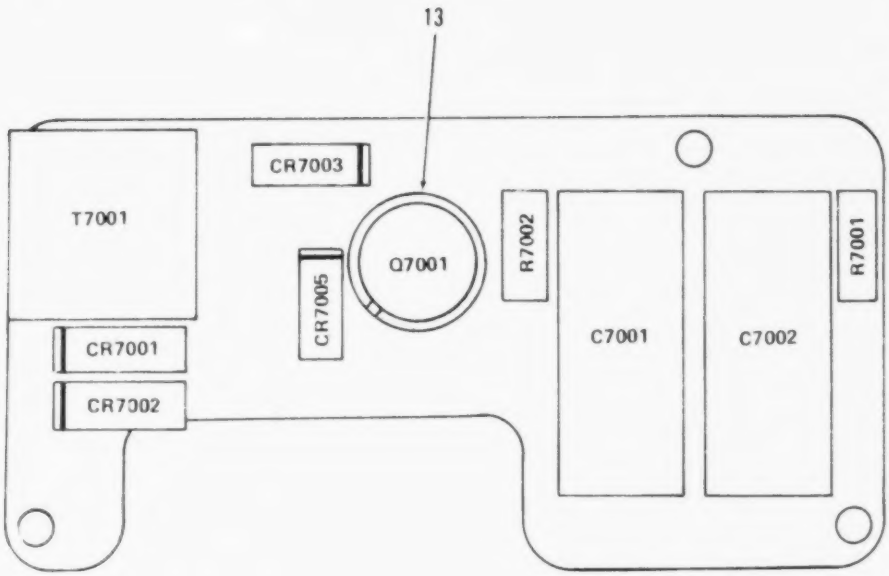

PREFIX ALL REFERENCE DESIGNATIONS WITH A7000

EL6JB176

Figure 25. Null Switch Assembly (Sheet 4 of 4).

(1) ILLUSTRATION (a) FIG NO	(1) ILLUSTRATION (b) ITEM NO	(2) SMR CODE	(3) NATIONAL STOCK NUMBER	(4) FSCM	(5) PART NUMBER	(6) DESCRIPTION / USABLE ON CODE	(7) UNIT OF ISSUE	(8) QTY INC IN UNIT
						GROUP 01J104 NULL SWITCH ASSY		
						(A7000 SM-C-414770		
25	1	PAFZZ	5305-00-138-0183	80063	SM-C-413531-6	SCREW,EXTERNALLY RE	EA	2
25	2	XDDZZ		80063	SM-B-414773	COVER ASSY	EA	1
25	3	XADDD		80063	SM-B-414776	NULL SWITCH ASSY	EA	1
25	4	PADZA	5935-00-840-1017	95238	SM11-20P-GD	CONNECTOR,RECEPTACL 11 PIN TYPE CONTACTS	EA	1
25	5	PADZZ	5305-00-139-7014	80063	SM-C-413531-3	SCREW,EXTERNALLY RE	EA	1
25	6	XDDZZ		80063	SM-C-414775	COVER	EA	1
25	7	PADZZ		78553	C-18695SS-012	NUT,SHEET SPRING	EA	1
25	8	XDDZZ		08544	SE24SL PL	EYELET,MTLC	EA	3
25	9	XDDZZ		30655	22NCFMA1-40	NUT,SLFLKG	EA	1
25	10	XDDZZ		80063	SM-C-414782	HOUSING ASSY	EA	1
25	11	XDDZZ		80063	SM-C-413536-1	SPACER	EA	2
25	12	XADDD		80063	SM-D-414778	NULL SW ELEC ASSY	EA	1
25	13	PADZZ	5999-00-752-5321	07047	A-10012	INSULATOR,DISK	EA	1
25	14	PADZZ	5961-00-064-2379	81349	JAN1N649	SEMICONDUCTOR DEVIC	EA	2
25	15	PADZZ	5961-00-087-6047	81349	JAN1N645	SEMICONDUCTOR DEVIC	EA	2
25	16	PADZZ	5910-00-154-0547	81349	M39003/01-3032	CAPACITOR,FIXED,ELE	EA	2
25	17	PADZZ	5961-00-837-7262	81349	JAN2N697	TRANSISTOR	EA	1
25	18	PADZZ	5905-00-110-7620	81349	RCR07G102JS	RESISTOR,FIXED,COMP	EA	1
25	19	PADZZ	5905-00-113-4860	81349	RCR07G270JS	RESISTOR,FIXED,COMP	EA	1
25	20	PADZZ	5950-01-012-3935	80045	B13323	TRANSFORMER,AUDIO F 45VDCW,85MILLIW PWR LEVEL,PRI IMPD 2800 OHM,SEC IMPD 1500 OHM	EA	1

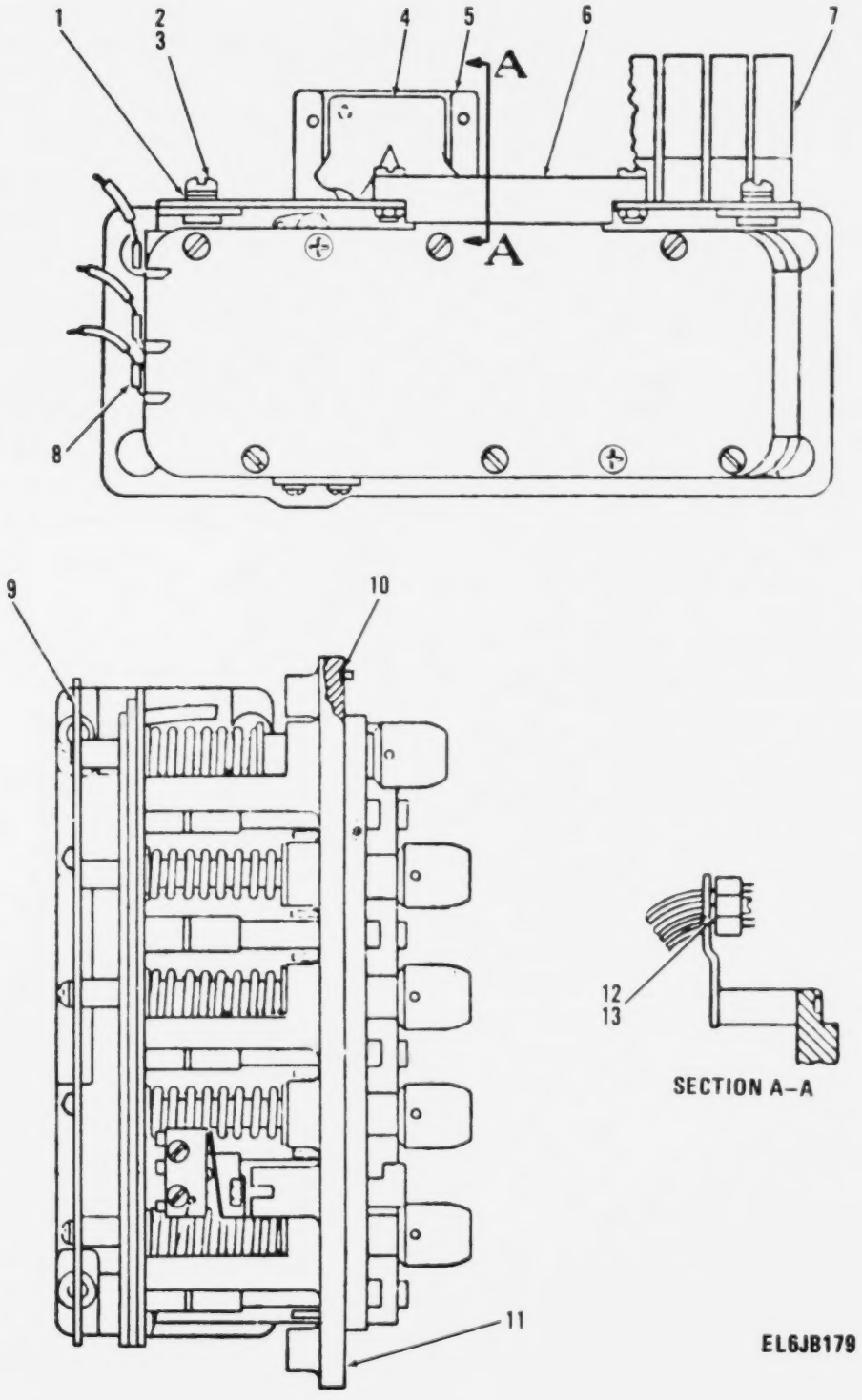

Figure 26. Selector Control Assembly (Sheet 1 of 10).

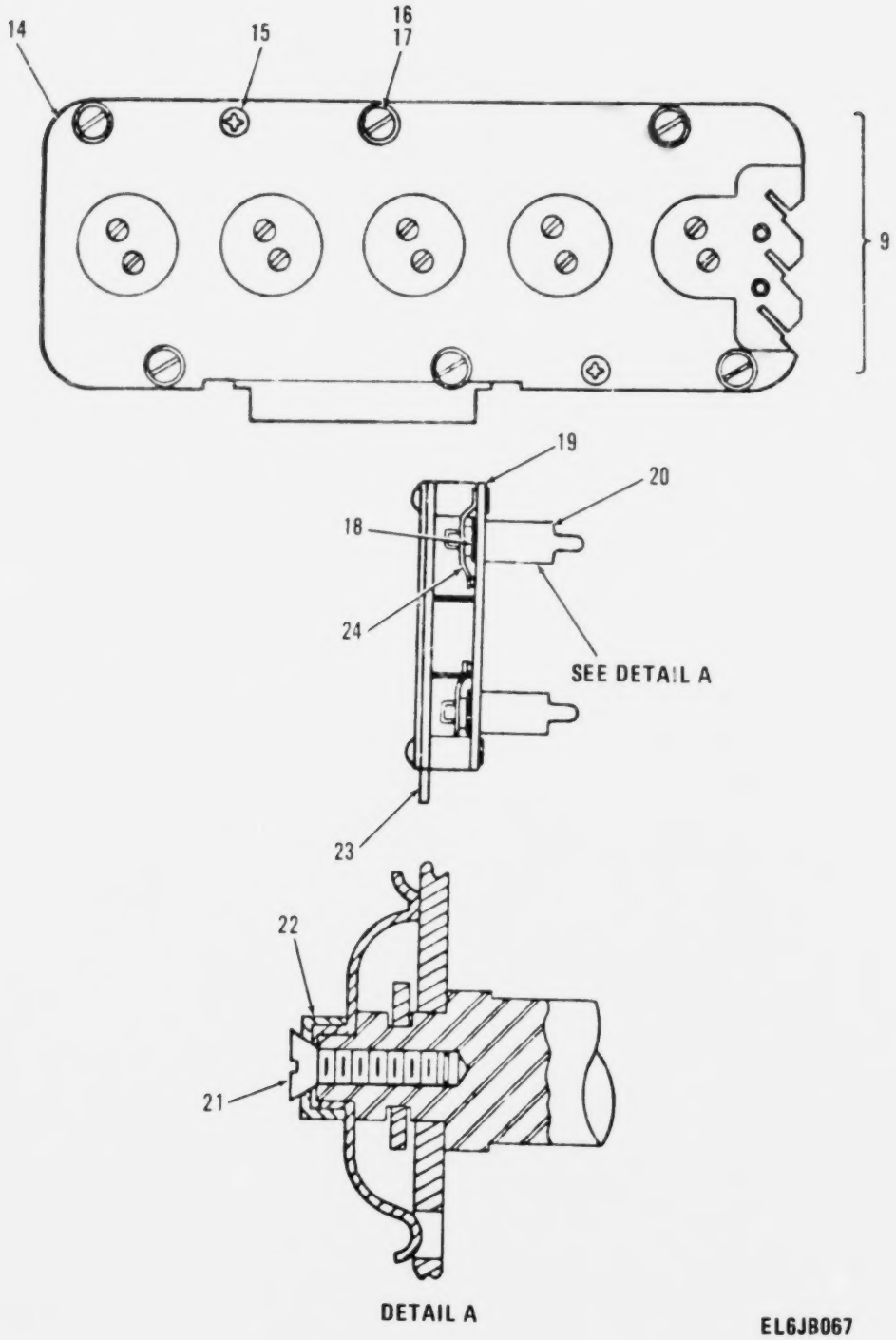

Figure 26. Selector Control Assembly (Sheet 2 of 10).

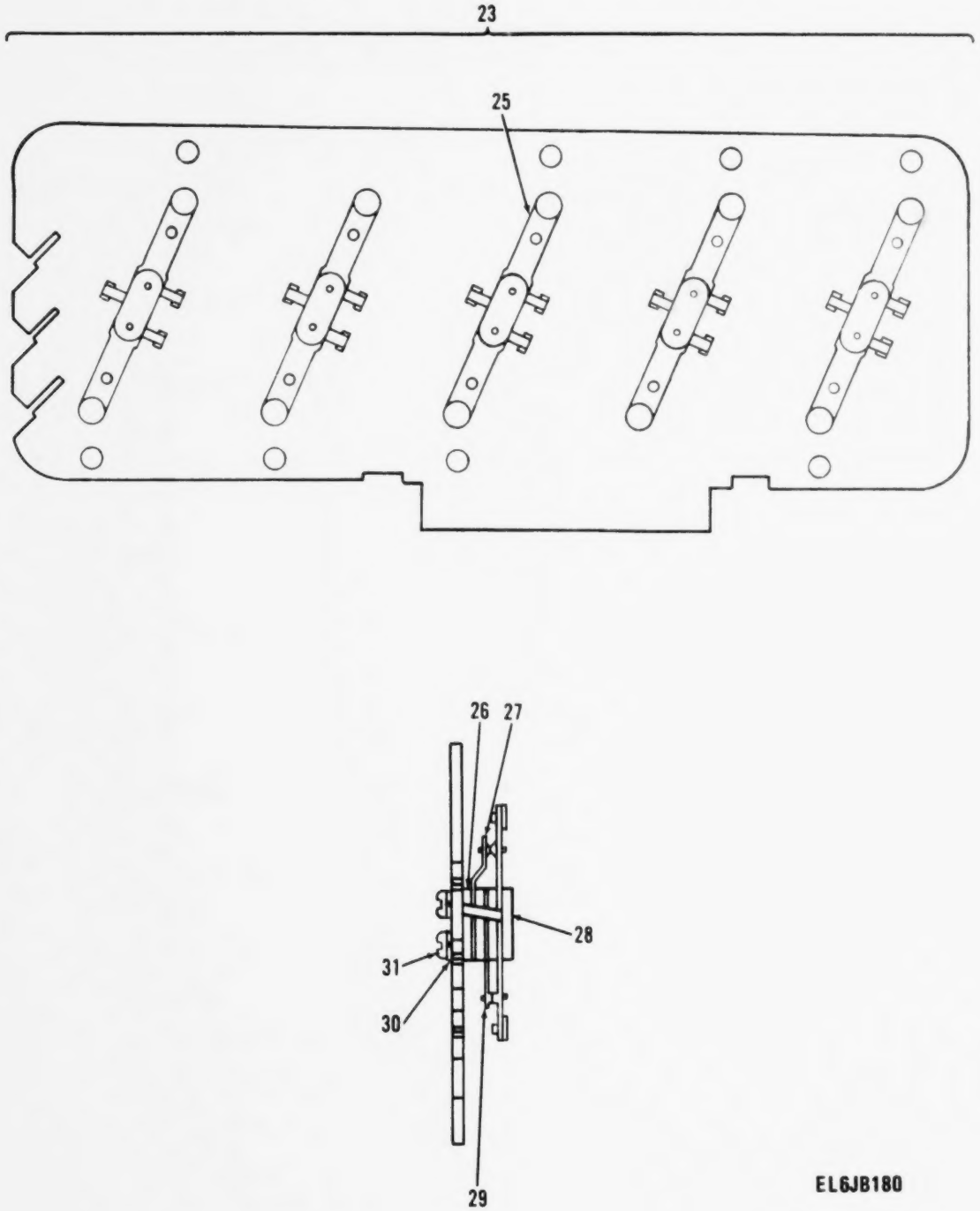

Figure 26. Selector Control Assembly (Sheet 3 of 10).

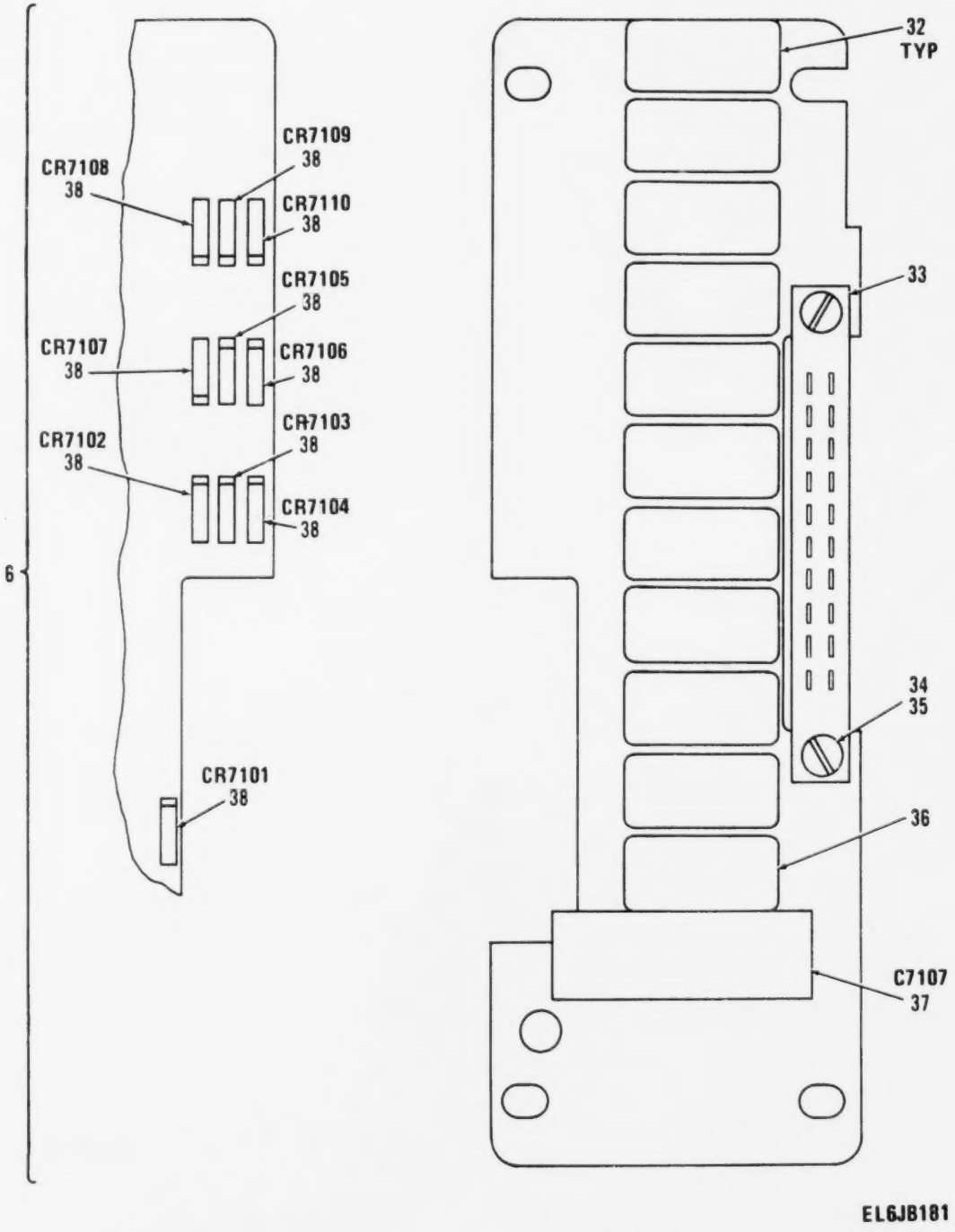

Figure 26. Selector Control Assembly (Sheet 4 of 10).

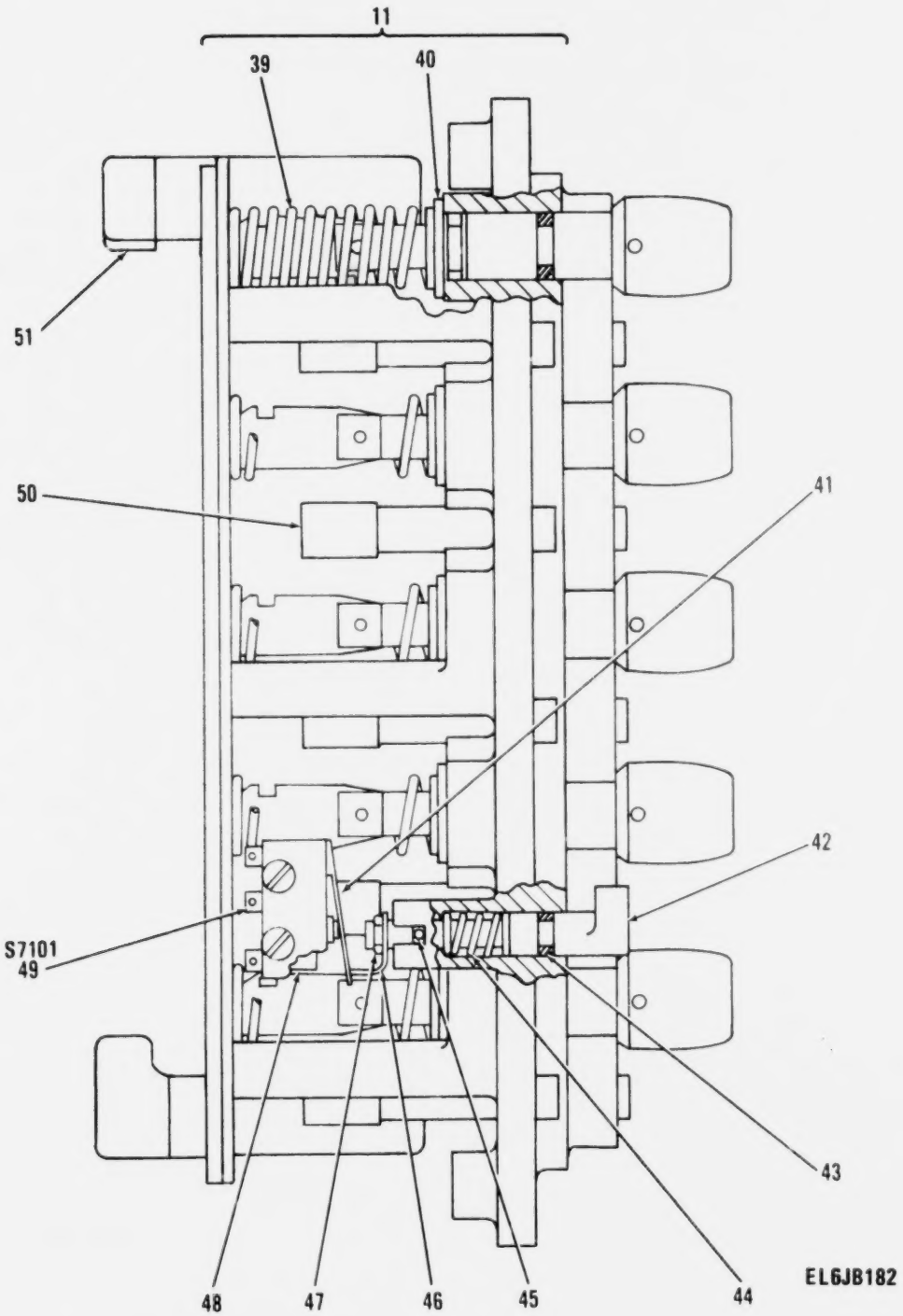

Figure 26. Selector Control Assembly (Sheet 5 of 10).

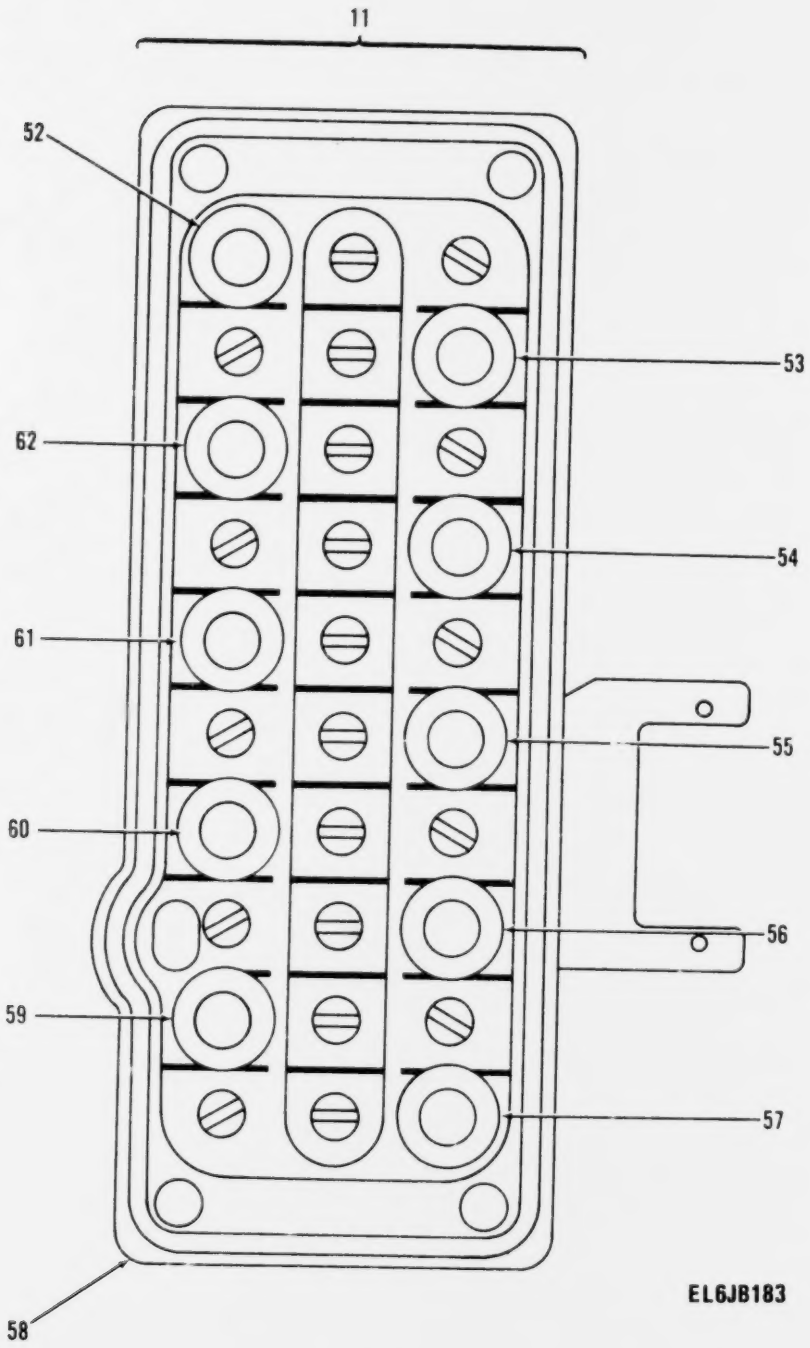

Figure 26. Selector Control Assembly (Sheet 6 of 10).

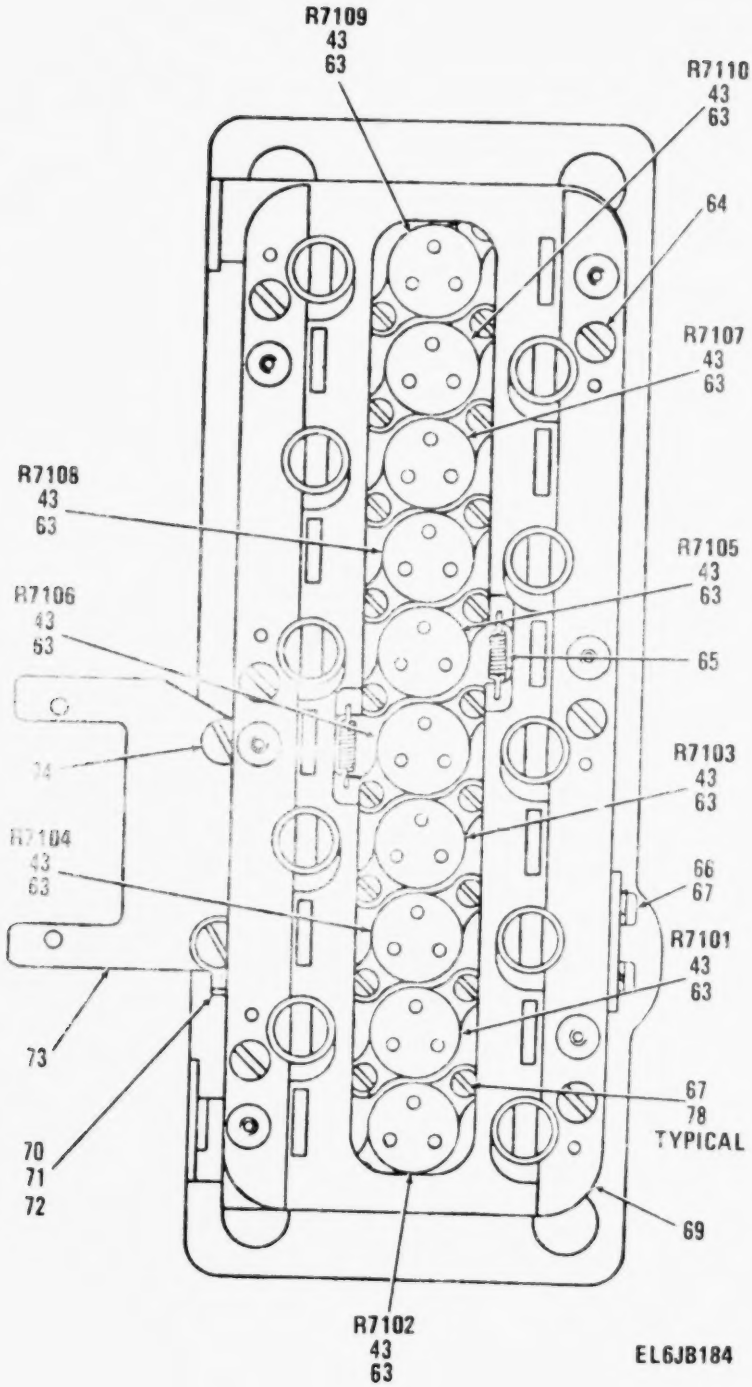

Figure 26. Selector Control Assembly (Sheet 7 of 10).

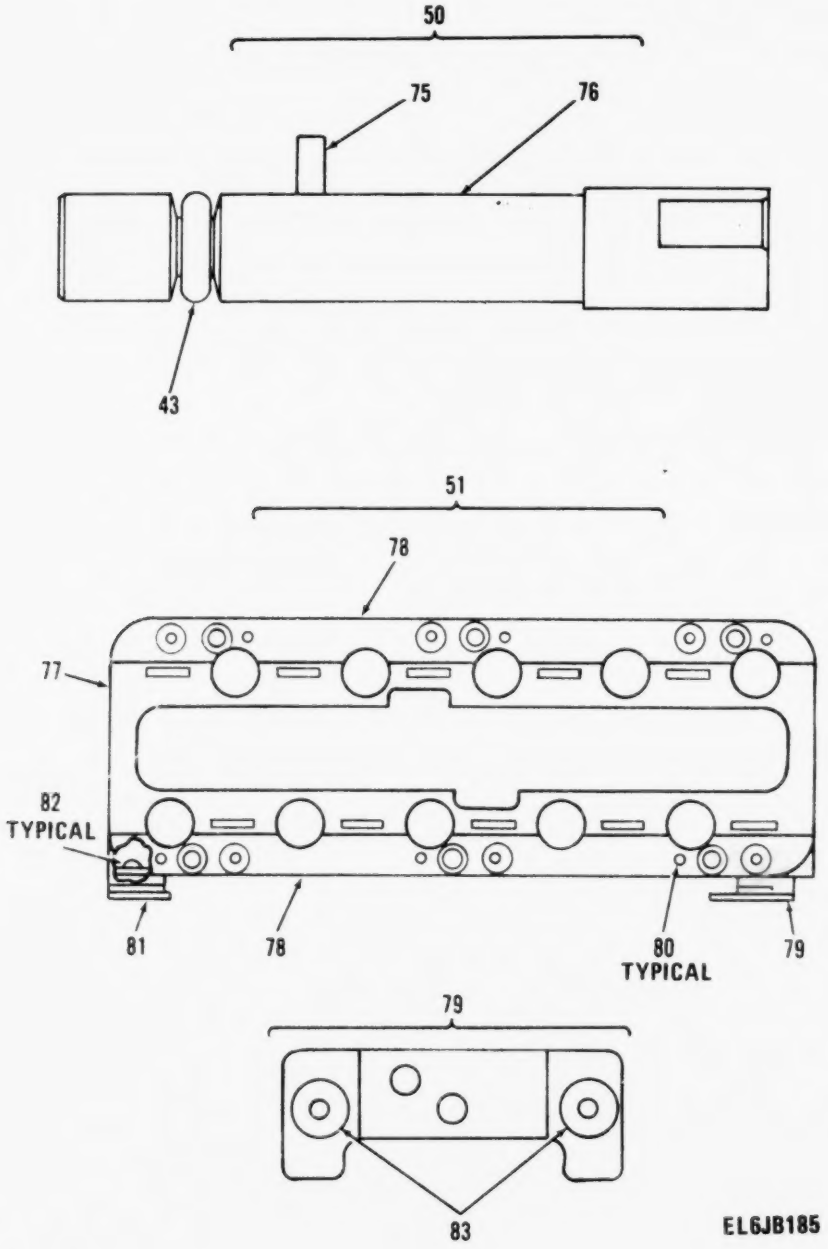

Figure 26. Selector Control Assembly (Sheet 8 of 10).

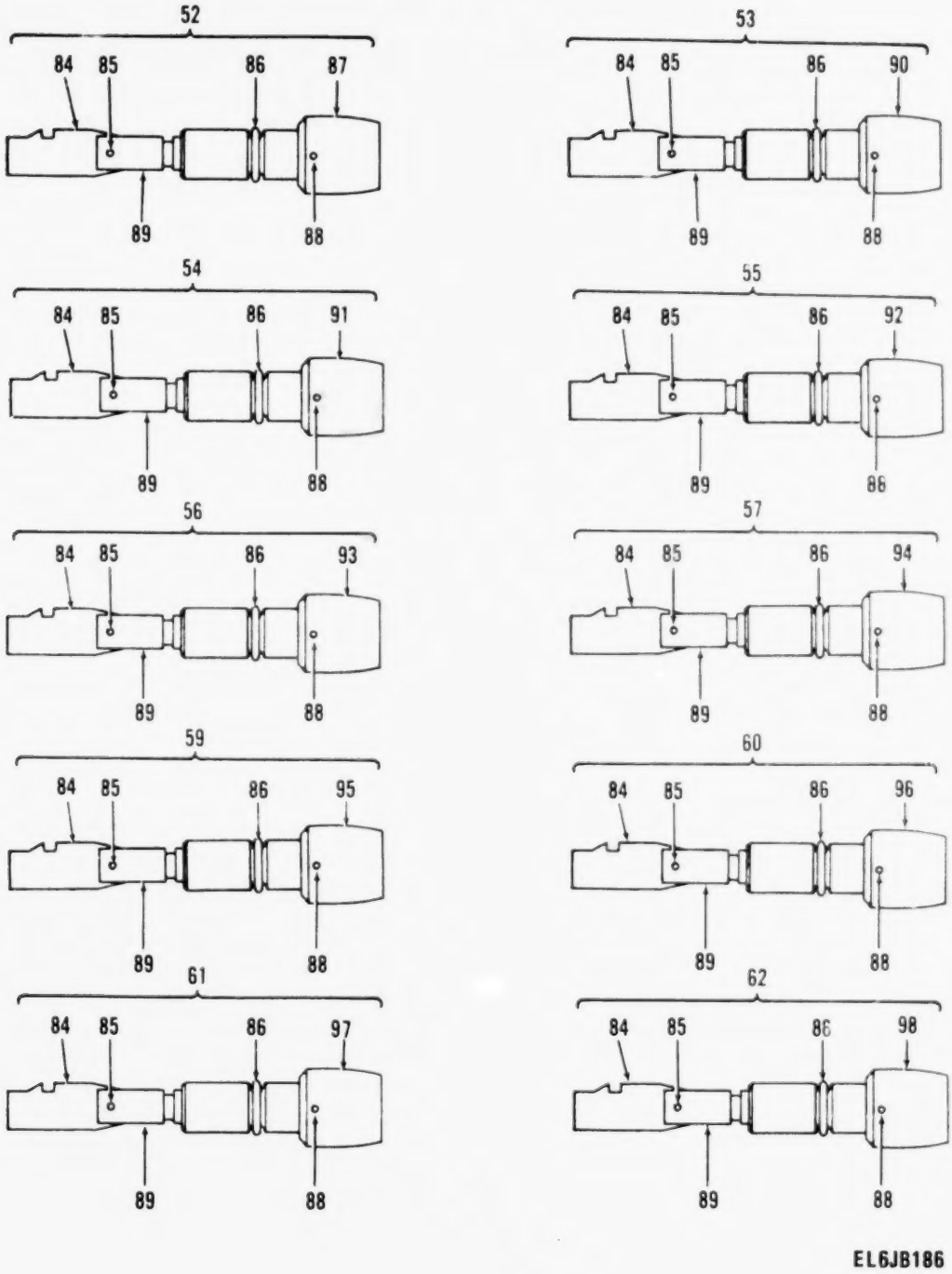

Figure 26. Selector Control Assembly (Sheet 9 of 10).

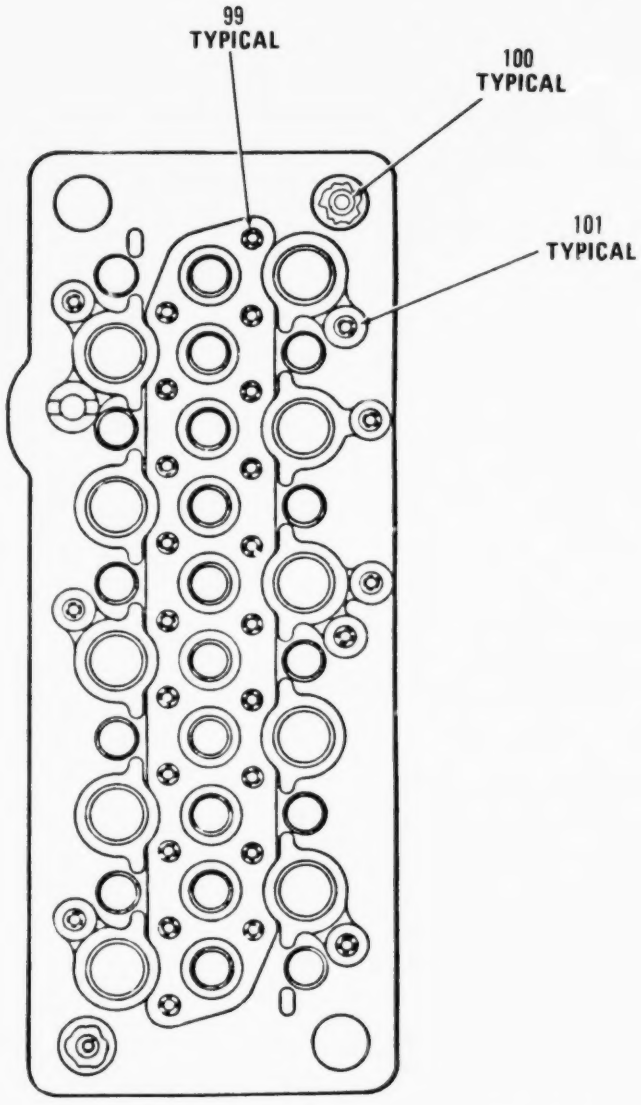

Figure 26. Selector Control Assembly (Sheet 10 of 10).

(1) ILLUSTRATION (a) FIG NO	(b) ITEM NO	(2) SMR CODE	(3) NATIONAL STOCK NUMBER	(4) FSCM	(5) PART NUMBER	(6) DESCRIPTION USABLE ON CODE	(7) U/M	(8) QTY INC IN UNIT
						GROUP 010105 SELECTOR CONTROL ASSY		
						A7100 SM-C-414649		
26	1	PAHZZ	5310-00-983-8483	96906	MS27183-5	WASHER,FLAT	EA	4
26	2	PAHZZ	5305-00-984-4984	96906	MS35206-227	SCREW,MACHINE	EA	4
26	3	PAHZZ	5310-00-045-4007	96906	MS35338-41	WASHER,LOCK	EA	4
26	4	XBHHH		80063	SM-E-414706	SEL CONT WRG ASSY	EA	1
26	5	PAHZZ	5935-00-807-0266	95238	SM34-20P-GD	CONNECTOR,RECEPTACL 34 PIN TYPE CONTACTS	EA	1
26	6	PAHHH	5945-01-128-6409	80063	SM-D-414701	RELAY ASSEMBLY	EA	1
26	7	PAFZZ	5945-00-853-5945	80205	BR8-600A1-F-26V	RELAY,ELECTROMAGNET DPDT,32 VDC MAX,100 OHM PORM 10 PCT COIL RES	EA	11
26	8	PAFZZ	5940-00-849-8617	00779	42263-2	TERMINAL,LUG	EA	3
26	9	PAFHH	5999-00-823-3244	80063	SM-C-414710	CONTACT ASSEMBLY,EL	EA	1
26	10	PAFZZ	5330-00-899-3323	80063	SM-C-414114-3	PACKING,PREFORMED	EA	1
26	11	ADFDD		80063	SM-D-414652	CONTROL ASSY	EA	1
26	12	PAFZZ		80063	SM-B-414820-1	SHIM	EA	V
26	13	PAFZZ	5365-00-988-0916	80063	SM-B-414820-2	SHIM	EA	V
26	14	XBHZZ		80063	SM-C-414715	COVER	EA	1
26	15	PAHZZ	5305-00-145-2119	80063	SM-B-414714	SCREW,ASSEMBLED WAS	EA	2
26	16	PAFZZ	5305-00-139-7012	80063	SM-C-413531-8	SCREW,EXTERNALLY RE	EA	6
26	17	PAFZZ	5310-00-543-2410	96906	MS35338-40	WASHER,LOCK	EA	6
26	18	PAHZZ	5365-00-598-1494	79136	5103-21-H	RING,RETAINING	EA	10
26	19	XAHZZ		80063	SM-B-414732	CIRCUIT BOARD ASSY	EA	1
26	20	PAHZZ	3020-00-484-3727	80063	SM-B-414712	SHAFT,SHOULDERED	EA	10
26	21	PAHZZ	5305-00-764-2964	96906	MS51959-4	SCREW,MACHINE	EA	10
26	22	XBHZZ		80063	SM-B-414716	RETAINER	EA	10
26	23	PAHHH	5820-00-457-0574	80063	SM-D-414717	CONTROL SUBASSEMBLY	EA	1
26	24	PAHZZ		80063	SM-C-414713	CONTACT ELECTRICAL	EA	10
26	25	PAHZZ		80063	SM-B-414728	CONTACT ASSEMBLY,EL	EA	1
26	26	XBHZZ		80063	SM-B-414720	SPACER	EA	15
26	27	PAHZZ	5999-00-228-8580	80063	SM-B-414722	CONTACT ASSEMBLY,EL	EA	5
26	28	XBHZZ		80063	SM-C-414721	NUT,PLATE	EA	5
26	29	PAHZZ	5999-00-228-8582	80063	SM-B-414725	CONTACT ASSEMBLY,EL	EA	5
26	30	PAHZZ	5310-00-543-5060	96906	MS35338-39	WASHER,LOCK	EA	10
26	31	PAHZZ	5305-00-140-4838	18359	1322-4	SCREW,MACHINE	EA	10
26	32	PAHZZ	5935-00-884-5277	80045	831124-3	SOCKET,PLUG-IN ELEC 7 SOCKET TYPE CONTACTS	EA	10
26	33	PAHZZ	5935-00-823-0753	05574	000201-1401	CONNECTOR,RECEPTACL 10 CONTACTS	EA	1
26	34	PAFZZ	5310-00-582-9176	30655	F92-1660-40	NUT,SELF-LOCKING,HE	EA	2
26	35	PAHZZ	5305-00-889-2999	96906	MS35206-217	SCREW,MACHINE	EA	2
26	36	PAHZA	5935-00-901-4718	05574	000300-0315	SOCKET,PLUG-IN ELEC 8 SOCKET TYPE CONTACTS	EA	1
26	37	PAHZZ	5910-00-957-0139	99515	EP-6D-12	CAPACITOR,FIXED,PAP .47UF,PORM 5 PCT,400 VDCW	EA	1

(1) ILLUSTRATION (a) FIG NO	(b) ITEM NO	(2) SMR CODE	(3) NATIONAL STOCK NUMBER	(4) FSCM	(5) PART NUMBER	(6) DESCRIPTION USABLE ON CODE	(7) U/M	(8) QTY INC IN UNIT
26	38	PAHZZ	5961-00-087-6047	81349	JAN1N645	SEMICONDUCTOR DEVIC	EA	10
26	39	PAHZZ	5360-00-884-2494	80063	SM-C-414658-1	SPRING,HELICAL,COMP	EA	10
26	40	PAHZZ	5310-00-823-8763	80063	SM-B-414658	WASHER,SHOULDERED A	EA	10
26	41	PAFZZ	5930-00-201-4707	22494	A1-3-030	ADAPTER,SWITCH ACTU	EA	1
26	42	PAHZZ	5820-00-932-9935	80063	SM-C-414655	ARM,ACTUATOR	EA	1
26	43	PAHZZ	5330-00-222-2767	88044	AN6227-1	PACKING,PREFORMED	EA	10
26	44	PAHZZ	5360-00-464-5430	80063	SM-C-414656-2	SPRING,HELICAL,COMP	EA	1
26	45	PAHZZ		96906	MS171434	PIN,SPRING	EA	1
26	46	PAHZZ	5930-00-937-9841	80063	SM-B-414657	ARM,SWITCH ACTUATOR	EA	1
26	47	PAFZZ	5310-00-582-9176	30655	F92-1660-40	NUT,SELF-LOCKING,HE	EA	1
26	48	XAHZZ		80063	SM-B-414663	INSULATOR,PLATE	EA	1
26	49	PAFZZ	5930-00-501-1787	91929	115M3	SWITCH,SENSITIVE 28VDC,4AMP RES CONTACT RATING,115VAC,400 HZ,5AMP CONT RATING	EA	1
26	50	XDDDD		80063	SM-B-414667	SHAFT ASSY	EA	10
26	51	XBDDD		80063	SM-D-414670	PLATE ASSY	EA	1
26	52	AHHHH		80063	SM-C-414689	PUSH BUTTON ASSY	EA	1
26	53	AHHHH		80063	SM-C-414699	PUSH BUTTON ASSY	EA	1
26	54	AHHHH		80063	SM-C-414697	PUSH BUTTON ASSY	EA	1
26	55	AHHHH		80063	SM-C-414695	PUSH BUTTON ASSY	EA	1
26	56	AHHHH		80063	SM-C-414693	PUSH BUTTON ASSY	EA	1
26	57	AHHHH		80063	SM-C-414691	PUSH BUTTON ASSY	EA	1
26	58	XBDDD		80063	SM-D-414664	PANEL ASSY	EA	1
26	59	AHHHH		80063	SM-C-414678	PUSH BUTTON ASSY	EA	1
26	60	AHHHH		80063	SM-C-414683	PUSH BUTTON ASSY	EA	1
26	61	AHHHH		80063	SM-C-414685	PUSH BUTTON ASSY	EA	1
26	62	AHHHH		80063	SM-C-414687	PUSH BUTTON ASSY	EA	1
26	63	PAHZZ	5905-00-892-6542	84048	5000-6141	RESISTOR,VARIABLE,W 10200 OHMS,PORM 2.0 PCT,1 WATT POWER RATING 3600 DEG ROTATION	EA	10
26	64	PADZZ	5305-00-958-6230	96906	MS35190-224	SCREW,MACHINE	EA	2
26	65	PAHZZ	5360-00-884-2493	80063	SM-B-414661	SPRING,HELICAL,EXTE	EA	2
26	66	PAFZZ	5305-00-958-6382	96906	MS35206-206	SCREW,MACHINE	EA	2
26	67	PAFZZ	5310-00-543-5060	96906	MS35338-39	WASHER,LOCK	EA	20
26	68	PAFZZ	5305-00-054-5637	96906	MS51957-3	SCREW,MACHINE	EA	20
26	69	XAHZZ		80063	SM-D-414662	PLATE	EA	1
26	70	PADZZ	5940-00-050-2308	96906	MS35431-3	TERMINAL,LUG	EA	1
26	71	PADZZ	5310-00-655-9505	96906	MS35340-40	WASHER,LOCK	EA	1
26	72	PADZZ	5310-00-616-3554	96906	MS35335-29	WASHER,LOCK	EA	1
26	73	XDDZZ		80063	SM-C-414660	BRACKET,ELEC CONN	EA	1
26	74	PADZZ	5305-00-558-4889	96906	MS35223-14	SCREW,MACHINE	EA	2
26	75	PADZZ	5315-00-882-1438	96906	MS16562-193	PIN,SPRING	EA	1
26	76	XDDZZ		80063	SM-C-414669	SHAFT,SHLDR	EA	1

(1) ILLUSTRATION (a) FIG NO	(b) ITEM NO	(2) SMR CODE	(3) NATIONAL STOCK NUMBER	(4) FSCM	(5) PART NUMBER	(6) DESCRIPTION USABLE ON CODE	U/M	QTY
26	77	XDDZZ		80063	SM-D-414672	PLATE	EA	1
26	78	XDDZZ		80063	SM-D-414673	STRIP	EA	2
26	79	XDDZZ		80063	SM-B-414675	BRACKET ASSY	EA	1
26	80	PADZZ	5315-00-291-5471	96906	MS16562-189	PIN,SPRING	EA	1
26	81	XDDZZ		80063	SM-C-414674	SUPPORT ASSY	EA	1
26	82	PADZZ	5320-00-205-7930	96906	MS20450C8AD-6	RIVET,TUBULAR	EA	2
26	83	PADZZ		46384	CL-632-1C	NUT,PLAIN,CLINCH	EA	2
26	84	PAHZZ	5930-00-884-2573	80063	SM-C-414681	ARM,SWITCH ACTUATOR	EA	1
26	85	PAHZZ	5315-00-847-3735	96906	MS16562-190	PIN,SPRING	EA	1
26	86	PAHZZ	5330-00-584-0266	96906	MS28775-010	PACKING,PREFORMED	EA	1
26	87	PAFZZ	5355-00-823-9792	80063	SM-C-414680-5	KNOB	EA	1
26	88	PAFZZ	5315-00-823-8754	96906	MS16562-195	PIN,SPRING	EA	1
26	89	PAHZZ	3040-00-891-1859	80063	SM-C-414682	SHAFT,SHOULDERED	EA	1
26	90	PAFZZ	5355-00-823-9797	80063	SM-C-414680-10	KNOB	EA	1
26	91	PAFZZ	5355-00-823-9796	80063	SM-C-414680-9	KNOB	EA	1
26	92	PAFZZ	5355-00-823-9795	80063	SM-C-414680-8	KNOB	EA	1
26	93	PAFZZ	5355-00-823-9794	80063	SM-C-414680-7	KNOB	EA	1
26	94	PAFZZ	5355-00-823-9793	80063	SM-C-414680-6	KNOB	EA	1
26	95	PAFZZ		80063	SM-C-414680-1	KNOB	EA	1
26	96	PAFZZ	5355-00-823-9789	80063	SM-C-414680-2	KNOB	EA	1
26	97	PAFZZ	5355-00-823-9790	80063	SM-C-414680-3	KNOB	EA	1
26	98	PAFZZ	5355-00-823-9791	80063	SM-C-414680-4	KNOB	EA	1
26	99	PADZZ	5340-00-823-5334	73957	D8656-18	INSERT,SCREW THREAD	EA	20
26	100	PADZZ	5340-00-853-6711	73957	N13832-18	INSERT,SCREW THREAD	EA	4
26	101	PADZZ	5340-00-827-4024	96906	MS21209C0420	INSERT,SCREW THREAD	EA	8

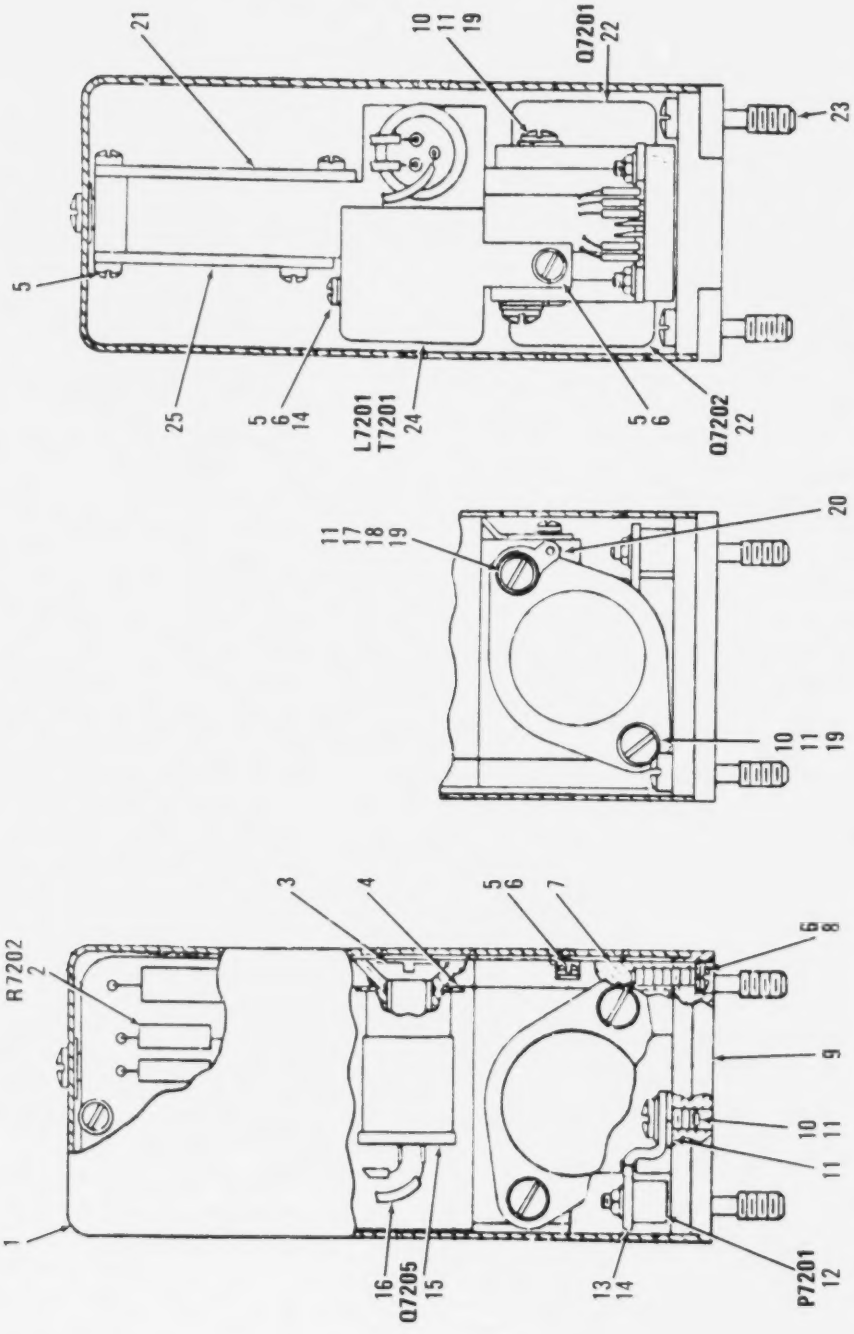

Figure 27. Amplifier, Synchro (Sheet 1 of 3).

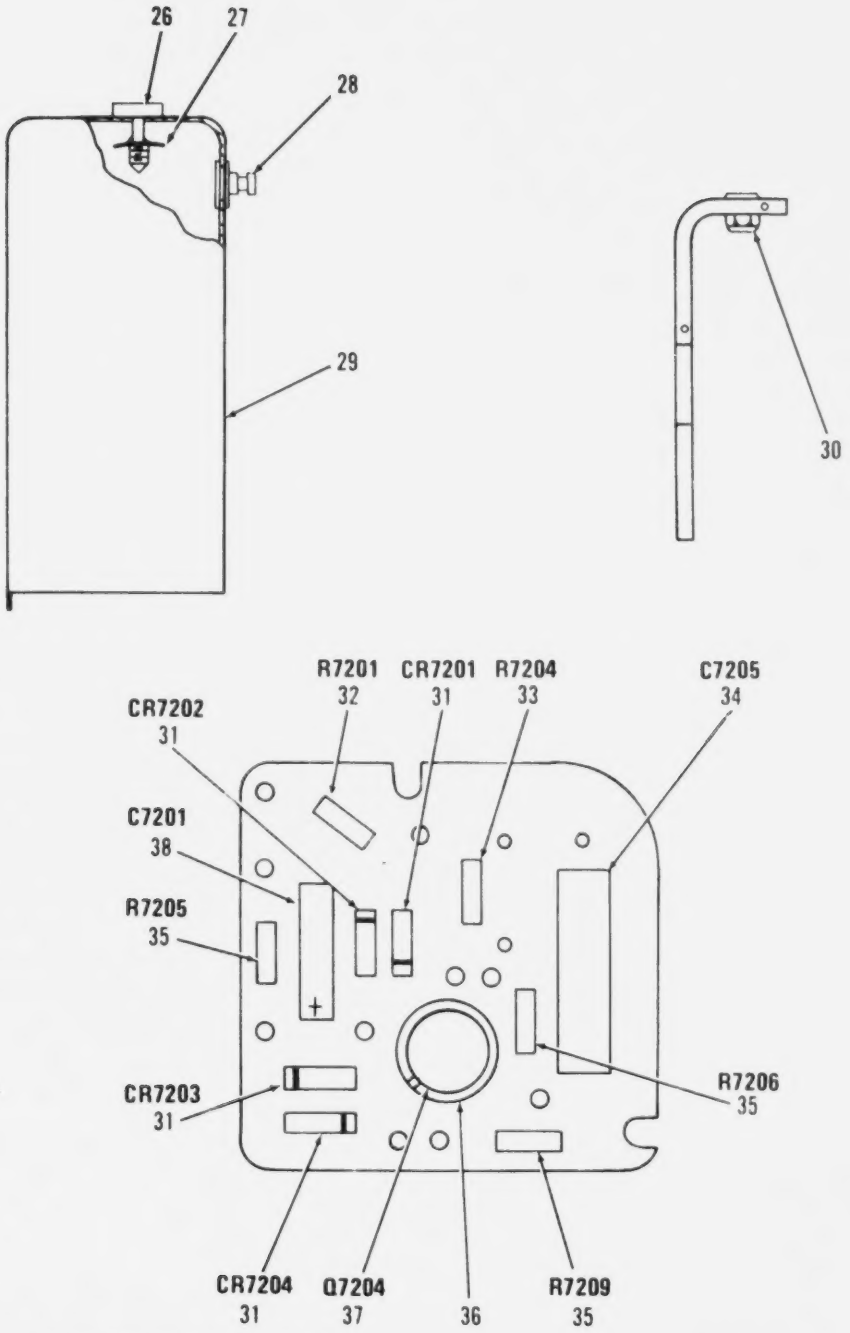

Figure 27. Amplifier, Synchro (Sheet 2 of 3).

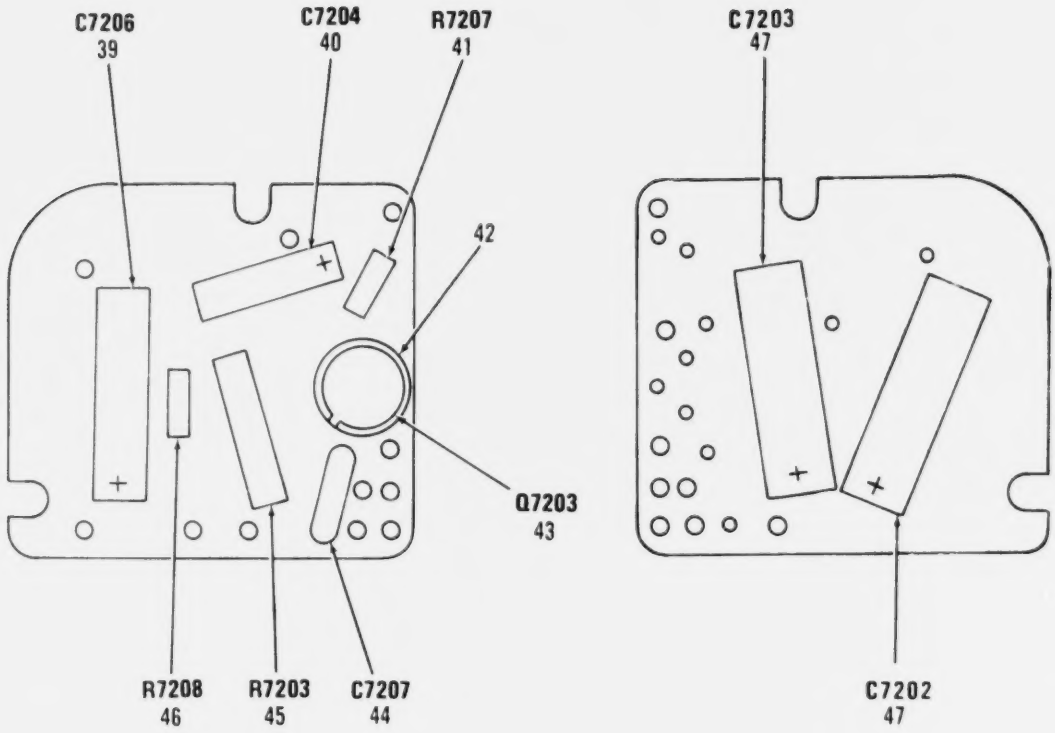

Figure 27. Amplifier, Synchro (Sheet 3 of 3).

(1) ILLUSTRATION (a) FIG NO	(b) ITEM NO	(2) SMR CODE	(3) NATIONAL STOCK NUMBER	(4) FSCM	(5) PART NUMBER	(6) DESCRIPTION / USABLE ON CODE	(7) U/M	(8) QTY INC IN UNIT
						GROUP 010106 AMPLIFIER,SYNCHRO		
						A7200 SM-D-414741		
						A7200A SM-D-921412		
27	1	PADDD		80063	SM-C-414759	COVER ASSY	EA	1
27	2	PADZZ	5905-00-115-3560	81349	RCR07G183JS	RESISTOR,FIXED,COMP	EA	1
27	2	PADZZ	5905-00-116-8556	81349	RCR07G223JS	RESISTOR,FIXED,COMP	EA	1
27	2	PADZZ	5905-00-119-3504	81349	RCR07G273JS	RESISTOR,FIXED,COMP	EA	1
27	2	PADZZ	5905-00-118-4559	81349	RCR07G333JS	RESISTOR,FIXED,COMP	EA	1
27	2	PADZZ	5905-00-115-8055	81349	RCR07G393JS	RESISTOR,FIXED,COMP	EA	1
27	2	PADZZ	5905-00-106-1278	81349	RCR07G123JS	RESISTOR,FIXED,COMP	EA	1
27	2	PADZZ	5905-00-116-8555	81349	RCR07G153JS	RESISTOR,FIXED,COMP	EA	1
27	2	PADZZ	5905-00-141-0717	81349	RCR07G473JS	RESISTOR,FIXED,COMP	EA	1
27	3	PADZZ	5305-00-145-4985	80063	SM-B-414745	SCREW,MACHINE	EA	1
27	4	XDDZZ		80063	SM-B-414746	INSULATOR,WASHER	EA	1
27	5	PADZZ	5305-00-054-5637	96906	MS51957-3	SCREW,MACHINE	EA	2
27	6	PADZZ	5310-00-543-5060	96906	MS35338-39	WASHER,LOCK	EA	2
27	7	XDDDD		80063	SM-B-414763	BRACKET ASSY	EA	1
27	8	PADZZ	5305-00-989-0682	96906	MS35206-205	SCREW,MACHINE	EA	1
27	9	XDDZZ		80063	SM-D-414744	BASE	EA	1
27	10	PADZZ	5305-00-558-4889	96906	MS35223-14	SCREW,MACHINE	EA	1
27	11	PADZZ	5310-00-543-2410	96906	MS35338-40	WASHER,LOCK	EA	2
27	12	PADZZ	5935-00-948-5867	97954	SMI7MDM70	CONNECTOR,RECEPTACL 7 PIN TYPE CONTACTS	EA	1
27	13	XDDZZ		80063	SM-C-414747	BRACKET	EA	1
27	14	PADZZ	5310-00-576-0900	80205	NAS620-3L	WASHER,FLAT	EA	1
27	15	PADZZ	5961-00-615-0367	81349	JAN2N158	TRANSISTOR	EA	1
27	16	XDDZZ		80063	SM-D-414814	SERVO AMPL WRG ASSY	EA	1
27	17	PADZZ	5310-00-616-3554	96906	MS35335-29	WASHER,LOCK	EA	1
27	18	PADZZ	5305-00-889-2997	96906	MS35206-215	SCREW,MACHINE	EA	1
27	19	PADZZ	5310-00-057-0573	80205	NAS620C4	WASHER,FLAT	EA	4
27	20	PADZZ	5940-00-177-7974	96906	MS77070-1	TERMINAL,LUG	EA	1
27	21	XADDD		80063	SM-D-414749	AMPL ELEC ASSY	EA	1
27	22	PADZZ	5961-00-136-4162	81349	JAN2N3792	TRANSISTOR	EA	2
27	23	PAFZZ	5305-00-139-7008	80063	SM-C-413884-5	SCREW,EXTERNALLY RE	EA	2
27	24	PADZZ	5950-01-013-4181	80063	SM-D-414743	REACTOR-TRANSFORMER 40VDCW,0 MILLIA PRIMARY RATING,175VDCW, 28MILLIA EA HALF SEC	EA	1
27	25	XADDD		80063	SM-D-414754	AMPL ELEC ASSY	EA	1
27	26	PADZZ	5305-00-139-7013	80063	SM-C-413531-7	SCREW,EXTERNALLY RE	EA	1
27	27	PADZZ		78553	C-18695SS-012	NUT,SHEET SPRING	EA	1
27	28	XDDZZ		80063	SM-B-414762	TERMINAL	EA	1
27	29	XDDZZ		80063	SM-C-414761	COVER	EA	1

(1) ILLUSTRATION (a) FIG NO	(1) ILLUSTRATION (b) ITEM NO	(2) SMR CODE	(3) NATIONAL STOCK NUMBER	(4) FSCM	(5) PART NUMBER	(6) DESCRIPTION USABLE ON CODE	(7) U/M	(8) QTY INC IN UNIT
27	30	XDDZZ		30655	22NC6-40	NUT,CLINCH	EA	1
27	31	PADZZ	5961-00-892-0734	81349	JAN1N4838	SEMICONDUCTOR DEVIC	EA	4
27	32	PADZZ	5905-00-131-1255	81349	RCR07G122JS	RESISTOR,FIXED,COMP	EA	1
27	33	PADZZ	5905-00-106-3666	81349	RCR07G103JS	RESISTOR,FIXED,COMP	EA	1
27	34	PADZZ	5910-00-628-6251	81349	CQ05A1KC223K3	CAPACITOR,FIXED,PLA	EA	1
27	35	PADZZ	5905-00-126-6683	81349	RCR07G332JS	RESISTOR,FIXED,COMP	EA	1
27	36	PADZZ	5999-00-752-5321	07047	A-10012	INSULATOR,DISK	EA	1
27	37	PADZZ		37695	2N2426	TRANSISTOR	EA	1
27	38	PADZZ	5910-00-007-2003	81349	M39003/01-3009	CAPACITOR,FIXED,ELE	EA	1
27	39	PADZZ	5910-00-144-4383	81349	M39003/01-3026	CAPACITOR,FIXED,ELE	EA	1
27	40	PADZZ	5910-00-007-2001	81349	M39003/01-2966	CAPACITOR,FIXED,ELE	EA	1
27	41	PADZZ	5905-00-114-5343	81349	RCR07G182JS	RESISTOR,FIXED,COMP	EA	1
27	42	PADZZ	5999-00-752-5321	07047	A-10012	INSULATOR,DISK	EA	1
27	43	XADZZ		80063	SM-C-374839	TRANSISTOR	EA	1
27	44	PADZZ	5910-00-890-0554	80063	SM-C-413567-3	CAPACITOR,FIXED,CER .0047UF,PORM 20 PCT,100VDCW	EA	1
27	45	PADZZ	5905-00-486-6989	81349	RCR32G9R1JS	RESISTOR,FIXED,COMP	EA	1
27	46	PADZZ	5905-00-105-7764	81349	RCR07G222JS	RESISTOR,FIXED,COMP	EA	1
27	47	PADZZ	5910-00-236-8745	81349	M39003/01-3021	CAPACITOR,FIXED,ELE	EA	2

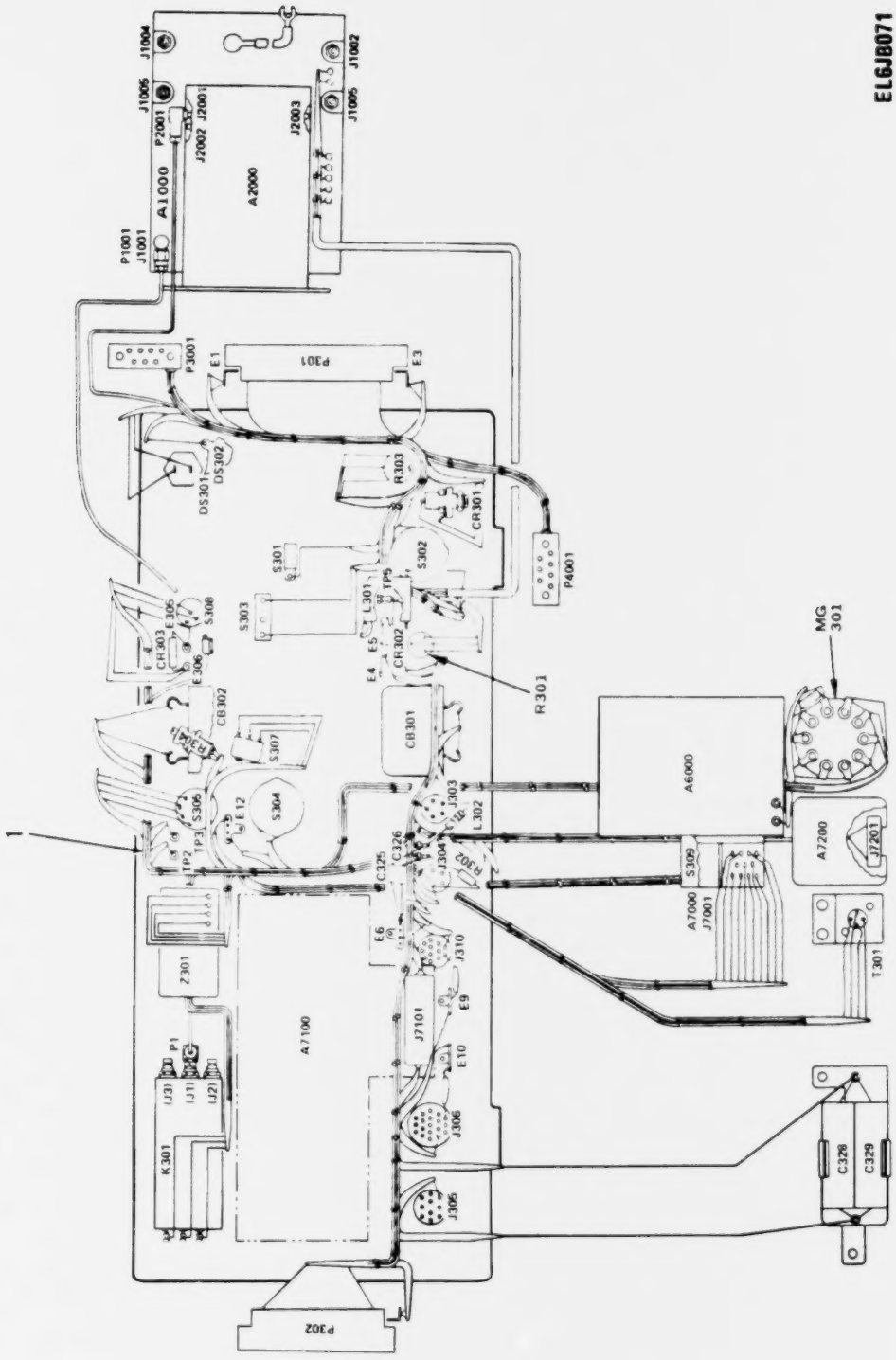

Figure 28. Control Wiring Assembly

(1) ILLUSTRATION (a) FIG NO	(1) ILLUSTRATION (b) ITEM NO	(2) SMR CODE	(3) NATIONAL STOCK NUMBER	(4) FSCM	(5) PART NUMBER	(6) DESCRIPTION / USABLE ON CODE	(7) U/M	(8) QTY INC IN UNIT
						GROUP 010107 CONTROL WIRING ASSY		
						SM-E-414411		
28	1	ADDDD		80063	SM-E-414413	WIRING HARNESS ASSY.....	EA	1

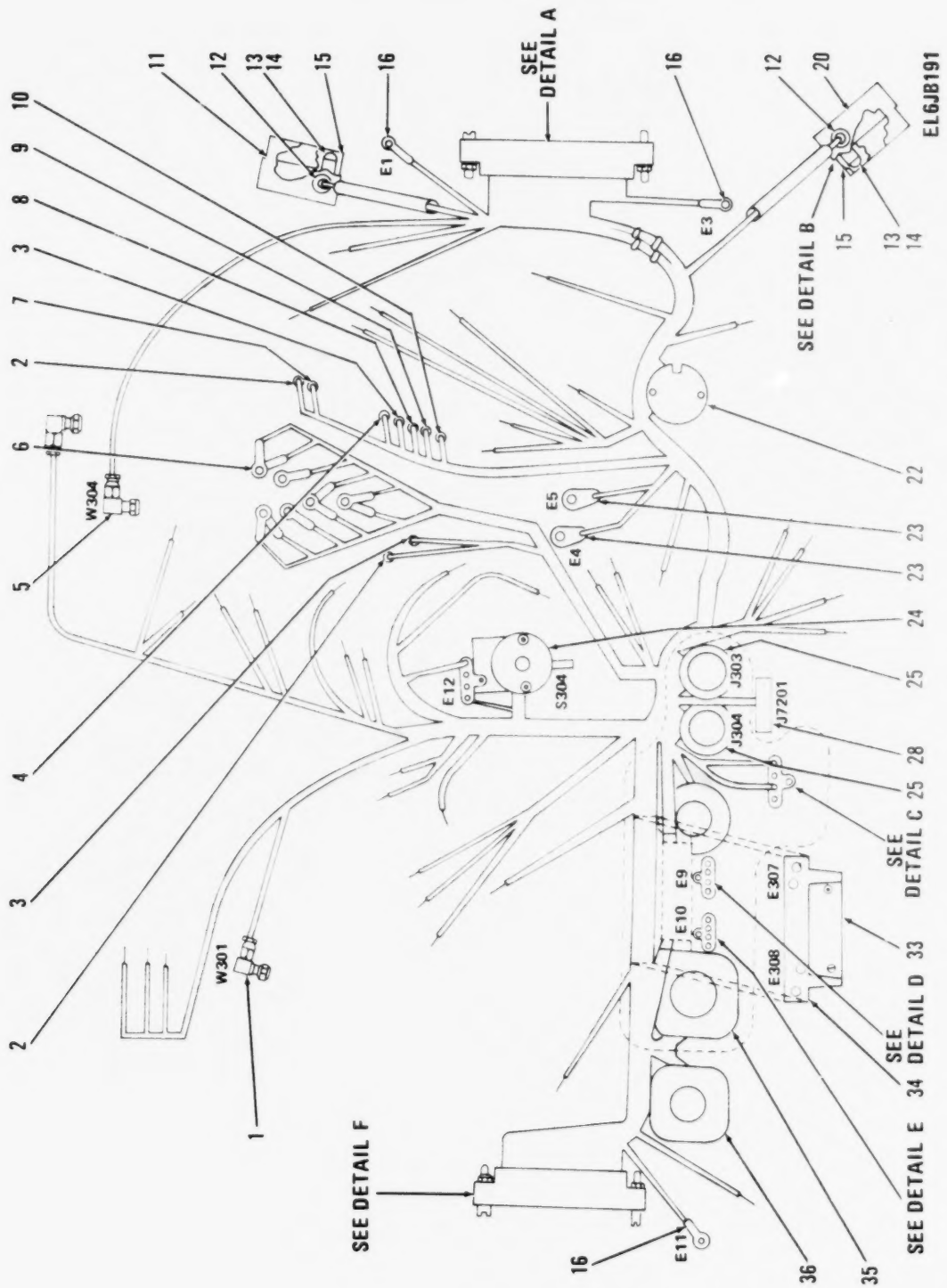

Figure 29. Wiring Harness Assembly (Sheet 1 of 4).

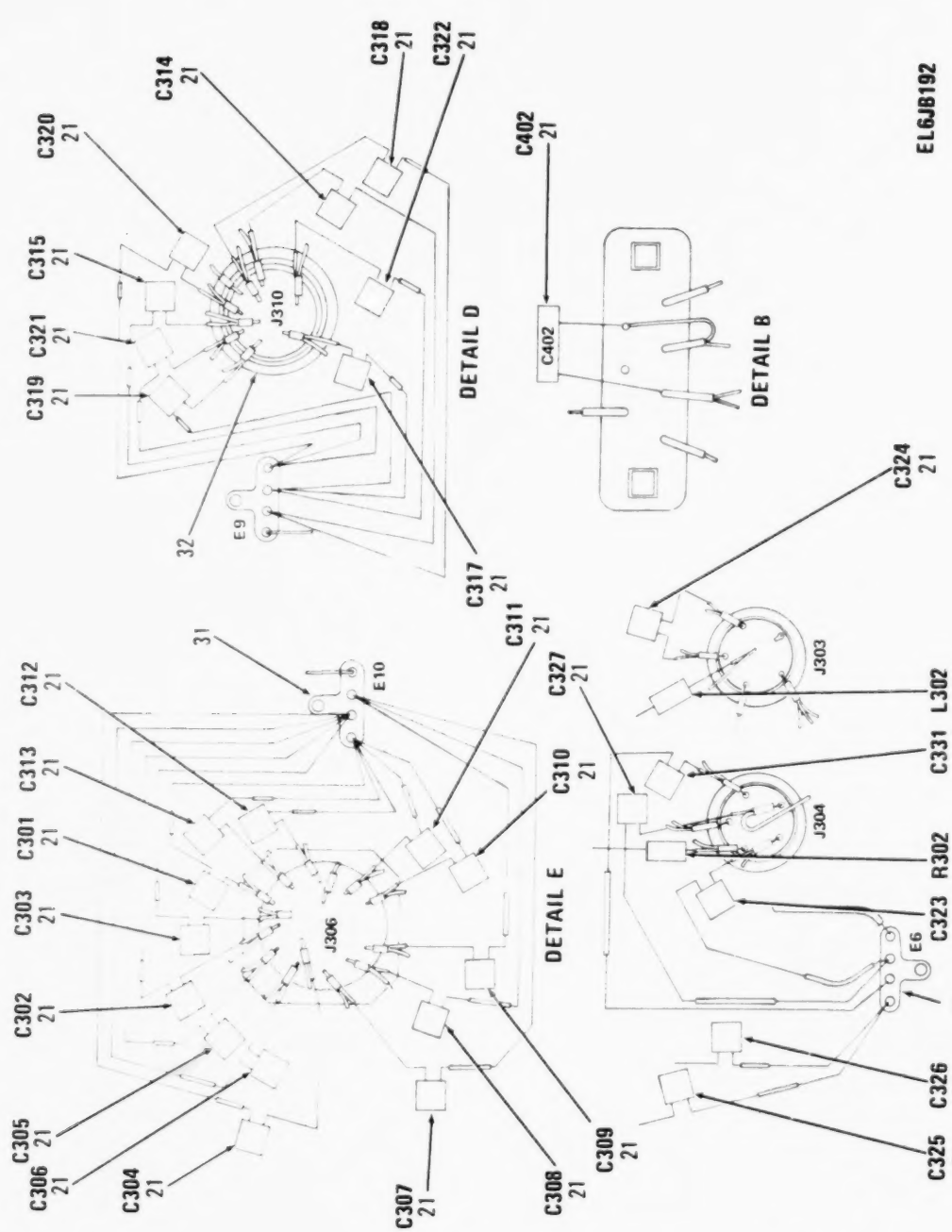

Figure 29. Wiring Harness Assembly (Sheet 2 of 4).

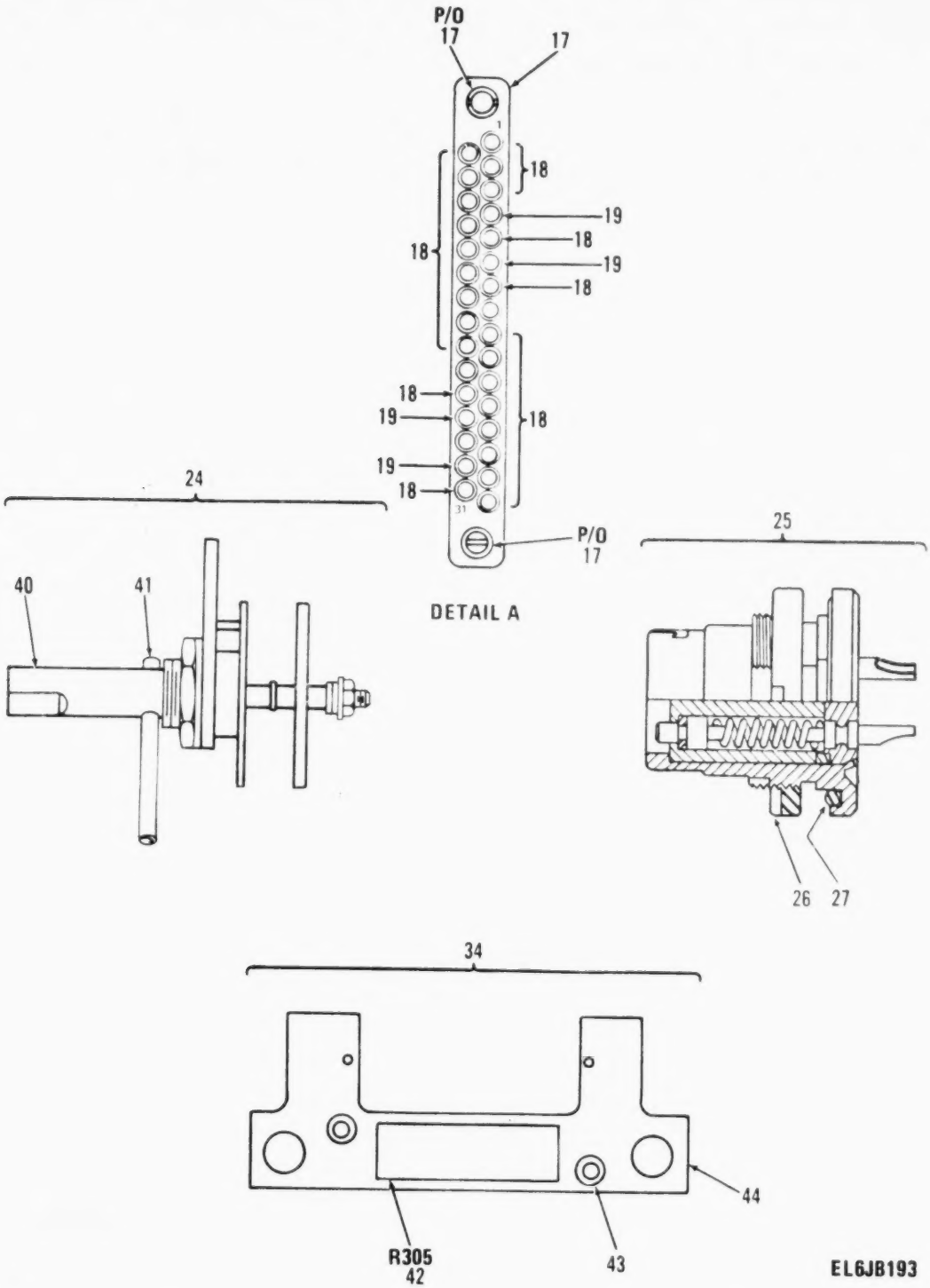

Figure 29. Wiring Harness Assembly (Sheet 3 of 4).

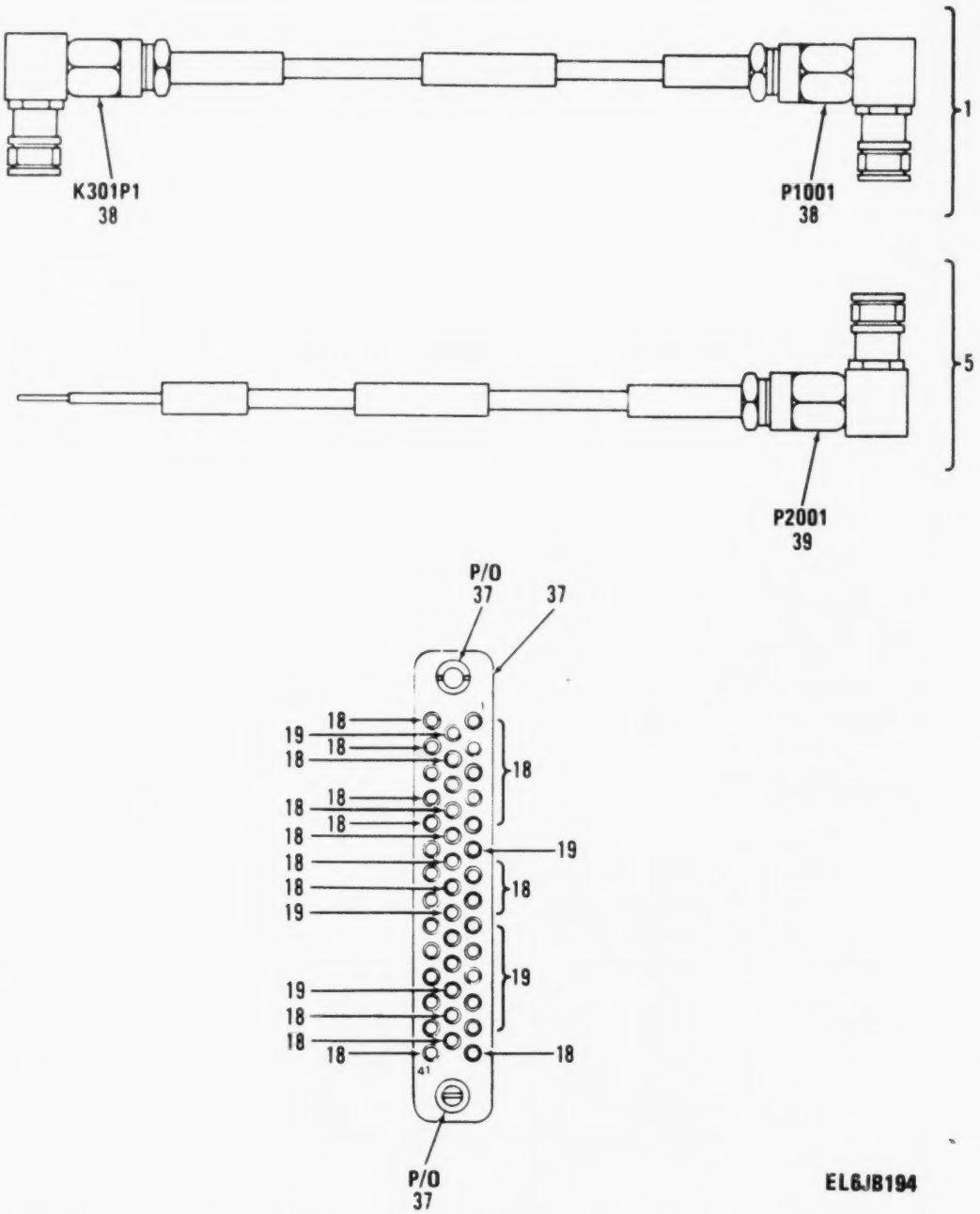

DETAIL F

Figure 29. Wiring Harness Assembly (Sheet 4 of 4).

(1) ILLUSTRATION (a) FIG NO	(1) ILLUSTRATION (b) ITEM NO	(2) SMR CODE	(3) NATIONAL STOCK NUMBER	(4) FSCM	(5) PART NUMBER	(6) DESCRIPTION USABLE ON CODE		
						GROUP 01010701 WIRING HARNESS ASSY		
						SM-E-414413		
29	1	PAHHA	5995-00-823-2936	80063	SM-D-414364-GR7	CABLE ASSEMBLY,RADI	EA	1
29	2	PAFZZ	5935-00-013-9837	37695	S413981-5	JACK,TIP	EA	2
29	3	PAFZZ	5935-00-849-5109	37695	S413981-4	JACK,TIP	EA	2
29	4	PAFZZ	5935-00-849-5110	98291	SKT14YELLOW	JACK,TIP	EA	1
29	5	PAHHA	5995-00-853-6777	80063	SM-D-413816-GR5	CABLE ASSEMBLY,RADI	EA	1
29	6	PAFZZ	5940-00-159-1252	79963	A291-1	TERMINAL,LUG	EA	10
29	7	PAFZZ	5935-00-655-1326	98291	SKT-14-WHITE	JACK,TIP	EA	1
29	8	PAFZZ	5935-00-813-3483	98291	SKT-14-VIOLET	JACK,TIP	EA	1
29	9	PAFZZ	5935-00-807-0211	37695	S413981-1	JACK,TIP	EA	1
29	10	PAFZZ	5935-00-849-5111	37695	S413981-3	JACK,TIP	EA	1
29	11	PAFZZ		80063	SM-B-414427	SHELL ASSEMBLY	EA	1
29	12	PAFZZ	5325-00-276-4230	80063	SM-C-414148-2	GROMMET,NONMETALLIC	EA	2
29	13	PAFZZ	5305-00-151-6888	80063	SM-B-414422	SCREW,MACHINE	EA	4
29	14	PAFZZ	5340-00-864-4780	80063	SM-C-414423	INSERT,SCREW THREAD	EA	4
29	15	PAFZA	5935-00-950-1578	81312	SLE7SK619	CONNECTOR,RECEPTACL 7 SOCKET TYPE CONTACTS,500 VRMS	EA	1
29	16	XBHZZ		78584	921016	TERMINAL,LUG	EA	3
29	17	PAHZZ	5935-00-853-6833	05574	000401-0013	CONNECTOR BODY,RECE PROVISIONS FOR 31 SOCKET TYPE CONTACTS	EA	1
29	18	PAHZA	5935-00-853-6401	80063	SM-C-413832-1	PLUG,TIP	EA	46
29	19	PAHZA	5999-00-853-6860	80063	SM-C-413832-2	CONTACT,ELECTRICAL	EA	46
29	20	PAFZZ		80063	SM-B-414424	SHELL ASSEMBLY	EA	1
29	21	PAFZZ	5910-00-758-6957	81349	M39014-01-0443	CAPACITOR,FIXED,CER	EA	10
29	22	PAFZZ	5930-00-823-0762	80063	SM-D-414420	SWITCH,ROTARY 3 SECTIONS,4 POSITION,3 POLE,SHORTING TYPE CONTACTS	EA	1
29	23	PAFZZ	5940-00-050-2308	96906	MS35431-3	TERMINAL,LUG	EA	2
29	24	PAFFF	5930-00-884-2579	80063	SM-B-414789	SWITCH,ROTARY	EA	1
29	25	PAFZZ	5935-00-823-0667	49956	481660-1	CONNECTOR,RECEPTACL	EA	2
29	26	PAFZZ	5310-01-062-6473	80063	SM-B-415684	NUT,PLAIN,ROUND	EA	1
29	27	PAFZZ	5330-01-103-5435	80063	SM-B-415688	PACKING,PREFORMED	EA	1
29	28	PAHZZ	5935-00-711-9278	95238	SM7-20S-GD	CONNECTOR,RECEPTACL 7 SOCKET TYPE CONTACTS,5 AMP CONTACT RATING	EA	1
29	29	PAFZZ	5905-00-141-1130	81349	RCR20G272JS	RESISTOR,FIXED,COMP	EA	1
29	30	PAFZZ	5950-00-059-3904	96906	MS75008-32	COIL,RADIO FREQUENC	EA	1
29	31	XBHZZ		80063	SM-B-374924	TERMINAL	EA	4
29	32	PAFZZ	5935-00-877-2134	81349	J-291/U	CONNECTOR,RECEPTACL	EA	1
29	33	PAHZZ	5935-00-989-5334	95238	SM34-20SGDF	CONNECTOR,RECEPTACL 6 SOCKET TYPE CONTACTS,5 AMP CONTACT RATING	EA	1
29	34	PAFFF	5820-00-955-9533	80063	SM-C-414823	BRACKET ASSEMBLY	EA	1
29	35	PAFZZ	5935-00-729-0536	77820	PTO7C14-19S	CONNECTOR,RECEPTACL 19 SOCKET TYPE CONTACTS,500 VRMS/700 VDC RATING,5 AMP MAX	EA	1

(1) ILLUSTRATION (a) FIG NO	(b) ITEM NO	(2) SMR CODE	(3) NATIONAL STOCK NUMBER	(4) FSCM	(5) PART NUMBER	(6) DESCRIPTION USABLE ON CODE	(7) U/M	(8) QTY INC IN UNIT
29	36	PAFZZ	5935-00-797-5365	77820	PT07C12-10S	CONNECTOR,RECEPTACL 10 SOCKET TYPE CONTACTS,500 VRMS/700 VDC RATING,5 AMP MAX.....	EA	1
29	37	PAFZA	5935-00-823-0754	05574	000401-0015	CONNECTOR BODY,RECE PROVISIONS FOR 41 SOCKET TYPE CONTACTS..	EA	1
29	38	PAHZA	5935-00-762-0414	05009	51-311-3196	CONNECTOR,PLUG,ELEC FEMALE COAXIAL,RIGHT ANGLE.....	EA	2
29	39	PAHZA	5935-00-762-0414	05009	51-311-3196	CONNECTOR,PLUG,ELEC FEMALE COAXIAL,RIGHT ANGLE.....	EA	1
29	40	XAFZZ		76854	193581-A1	SWITCH,ROTARY 1 SECTION,3 POLE,4 POSTITION,SHORTING TYPE CONTACTS.....	EA	1
29	41	PAFZZ	5315-00-823-8747	96906	MS171504	PIN,SPRING.....	EA	1
29	42	PAFZZ		80063	SM-C-374831-4	RESISTOR,FIXED WW.....	EA	1
29	43	PAFZZ	5940-00-051-6257	81349	SE079801	TERMINAL,STUD.....	EA	2
29	44	XBFZZ		80063	SM-B-414371	BRACKET.....	EA	1

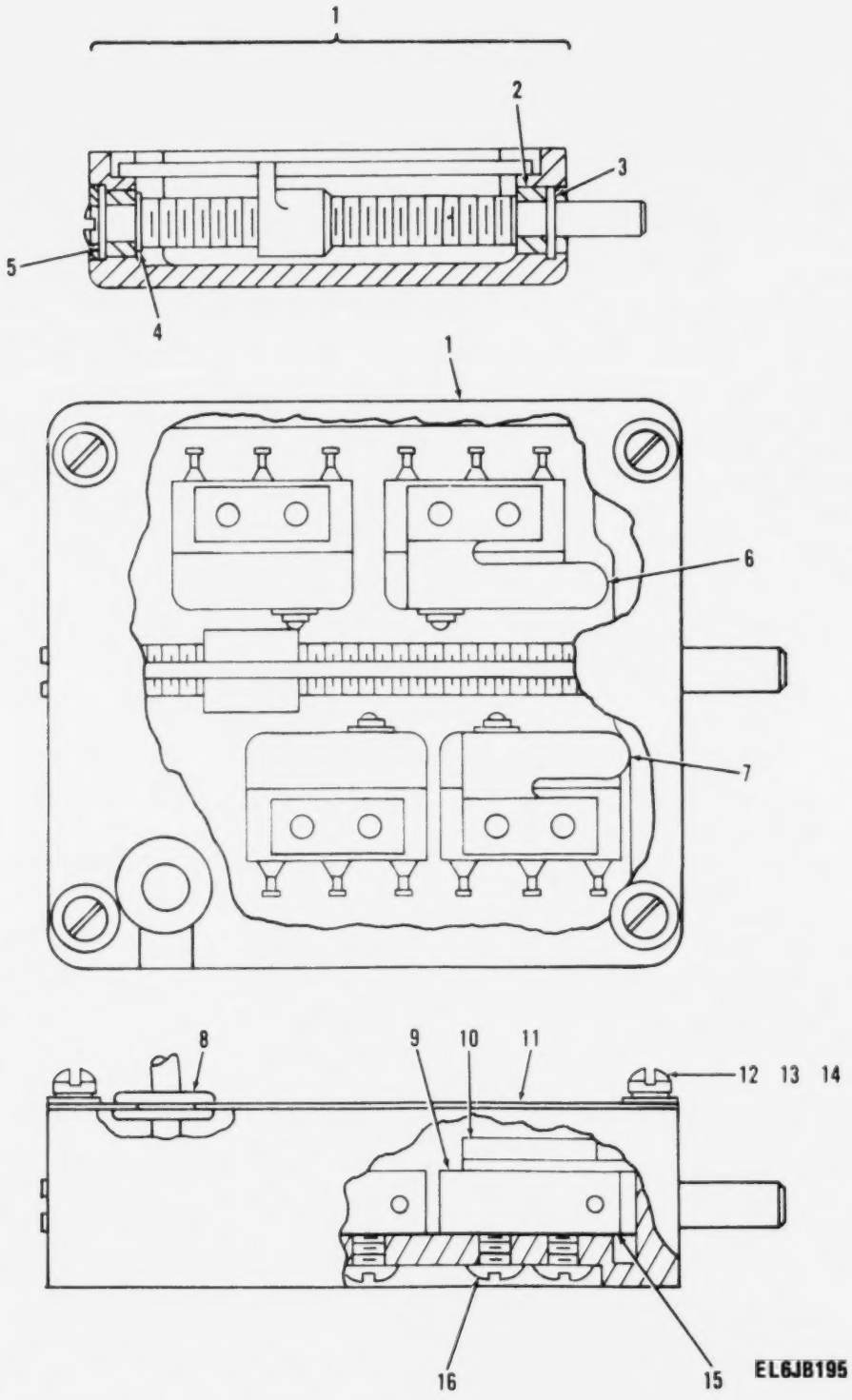

Figure 30. Switch Assembly

(1) ILLUSTRATION (a) FIG NO	(1) ILLUSTRATION (b) ITEM NO	(2) SMR CODE	(3) NATIONAL STOCK NUMBER	(4) FSCM	(5) PART NUMBER	(6) DESCRIPTION / USABLE ON CODE	(7) UM	(8) QTY INC IN UNIT
						GROUP 010108 SWITCH ASSY		
						SM-D-414632		
30	1	XBHHH		80063	SM-C-414640	HOUSING ASSY	EA	1
30	2	XBHZZ		38443	M-0816-FF	BEARING,BALL	EA	2
30	3	PAHZZ	5365-01-126-1353	96906	MS16629-1025	RING,RETAINING	EA	1
30	4	XBHZZ		80063	SM-B-414821	SHIM	EA	V
30	5	PAHZZ	5365-00-808-0643	96906	MS16625-1025	RING,RETAINING	EA	1
30	6	XBHZZ		80063	SM-C-414637-1	CLAMP	EA	1
30	7	XBHZZ		80063	SM-C-414637-2	CLAMP	EA	1
30	8	PAHZZ	5325-00-286-2598	70485	1070	GROMMET,NONMETALLIC	EA	1
30	9	PAHZZ	5930-00-226-6542	80063	SM-B-414822-1	SWITCH,SENSITIVE	EA	4
30	10	PAHZZ	5310-00-151-9002	80063	SM-B-414636	NUT STRIP	EA	4
30	11	XBHZZ		80063	SM-C-414634	COVER	EA	1
30	12	PAHZZ	5305-00-762-7482	96906	MS35206-202	SCREW,MACHINE	EA	4
30	13	PAHZZ	5310-00-543-5060	96906	MS35338-39	WASHER,LOCK	EA	4
30	14	PAHZZ	5310-00-087-0057	96906	MS27183-2	WASHER,FLAT	EA	4
30	15	XBHZZ		80063	SM-B-414635	INSULATOR,PLATE	EA	4
30	16	PAHZZ	5305-00-989-0682	96906	MS35206-205	SCREW,MACHINE	EA	8

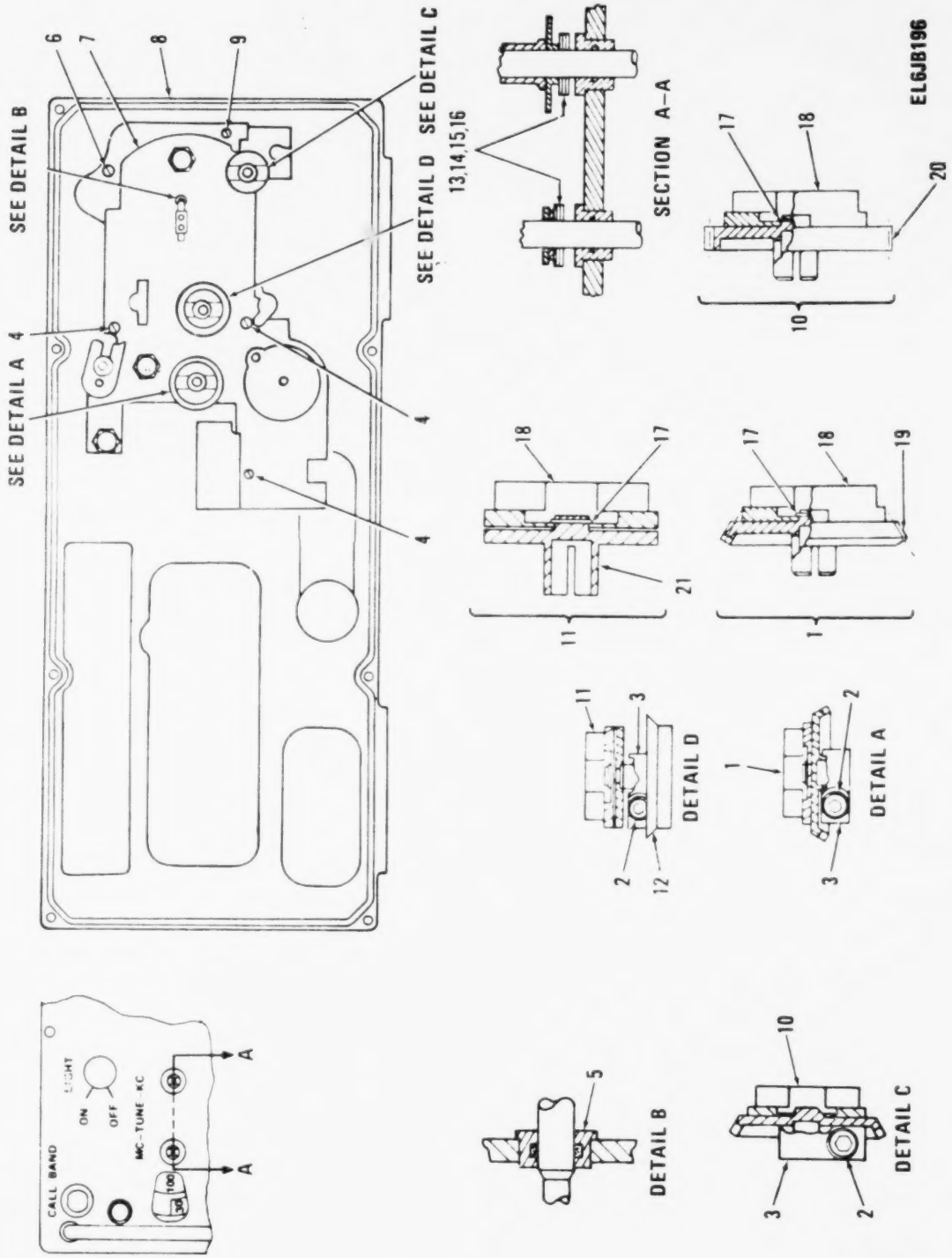

Figure 31. Panel and Housing Assembly.

(1) ILLUSTRATION (a) FIG NO	(1) ILLUSTRATION (b) ITEM NO	(2) SMR CODE	(3) NATIONAL STOCK NUMBER	(4) FSCM	(5) PART NUMBER	(6) DESCRIPTION / USABLE ON CODE	(7) U/M	(8) QTY INC IN UNIT
						GROUP 0101 09 PANEL AND HOUSING ASSY		
						SM-D-414496		
31	1	PAHZZ		80063	SM-B-414522	COUPLING GEAR	EA	1
31	2	PAHZZ	5305-00-221-0347	80063	SM-C-413900-2	SCREW,CAP,SOCKET HE	EA	1
31	3	PAHZZ	5820-00-853-5967	80063	SM-C-413899	CLAMP,HUB	EA	1
31	4	PAHZZ	5305-00-614-0266	96906	MS35265-33	SCREW,MACHINE	EA	3
31	5	PAHZZ	5365-00-159-4827	80063	SM-B-414499	SHIM	EA	1
31	6	PAHZZ	5305-00-579-2139	96906	MS35265-30	SCREW,MACHINE	EA	1
31	7	PAHDL	5820-00-884-2487	80063	SM-D-414525	RECEIVER-TRANSMITTE	EA	1
31	8	A0000		80063	SM-D-414500	PANEL ASSY	EA	1
31	9	PAHZZ	5305-00-582-5807	96906	MS35265-28	SCREW,MACHINE	EA	1
31	10	PAHHH	5820-00-832-5590	80063	SM-B-414629	COUPLING ASSEMBLY	EA	1
31	11	PAHHH	5821-00-250-2022	80063	SM-B-413908	COUPLING ASSEMBLY	EA	1
31	12	PAHZZ		80063	SM-C-374805	WASHER,GUIDE	EA	1
31	13	XBHZZ		80063	SM-B-374809-1	SHIM	EA	V
31	14	PAHZZ		80063	SM-B-374809-2	SHIM	EA	V
31	15	XBHZZ		80063	SM-B-374809-3	SHIM	EA	V
31	16	XBHZZ		80063	SM-B-374809-4	SHIM	EA	V
31	17	PAHZZ	5365-00-263-5877	79136	5100-15-C	RING,RETAINING	EA	1
31	18	XAHZZ		80063	SM-C-413911-1	RECEIVER-TRANSMITTE	EA	1
31	19	XAMZZ		80063	SM-D-414524	GEAR,HELICAL	EA	1
31	20	XBHZZ		80063	SM-D-414631	GEARSHAFT,SPUR	EA	1
31	21	PAHZZ	5820-00-932-9933	80063	SM-C-413910	HUB,COUPLER	EA	1

135/(136 BLANK)

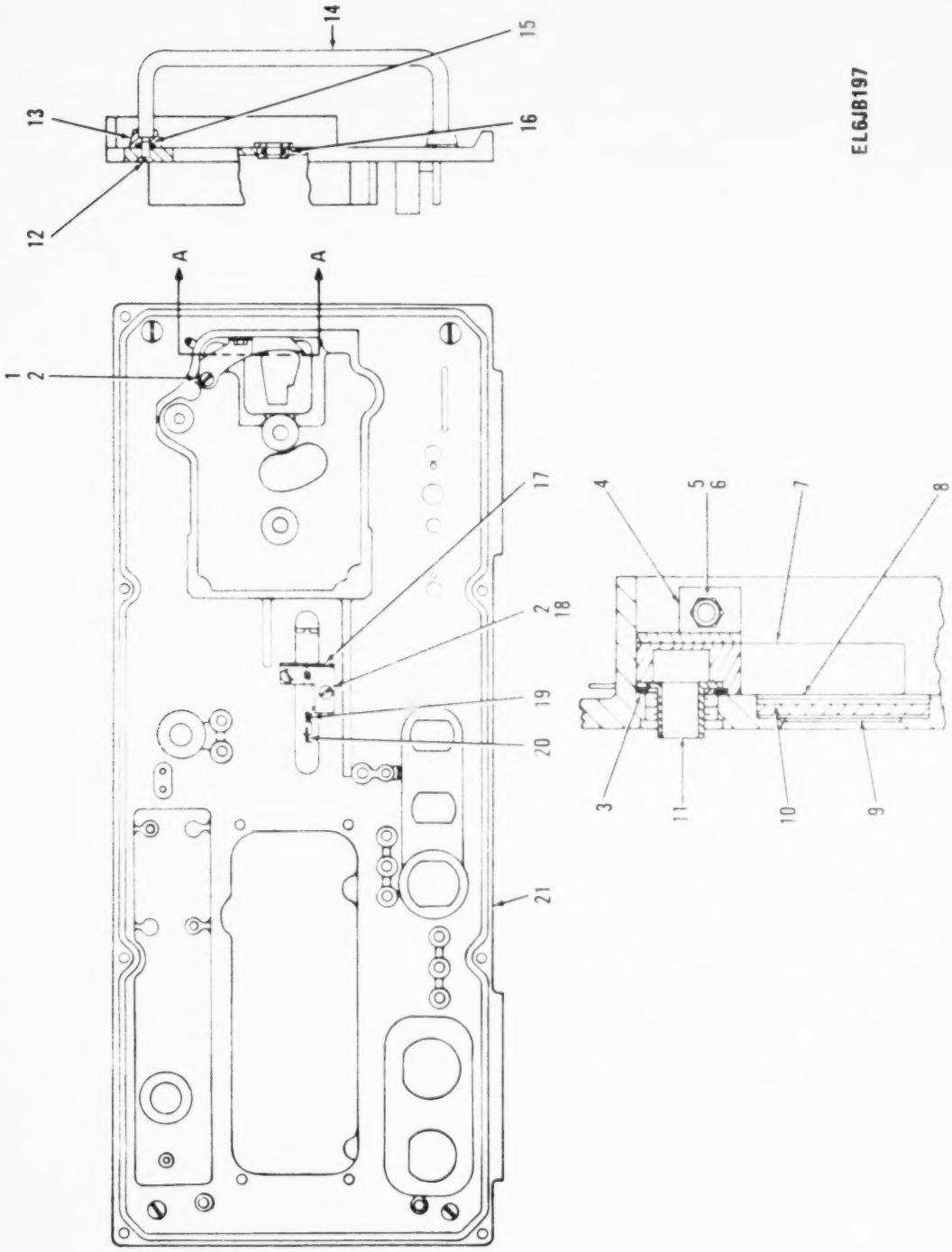

Figure 32. Panel Assembly (Sheet 1 of 2).

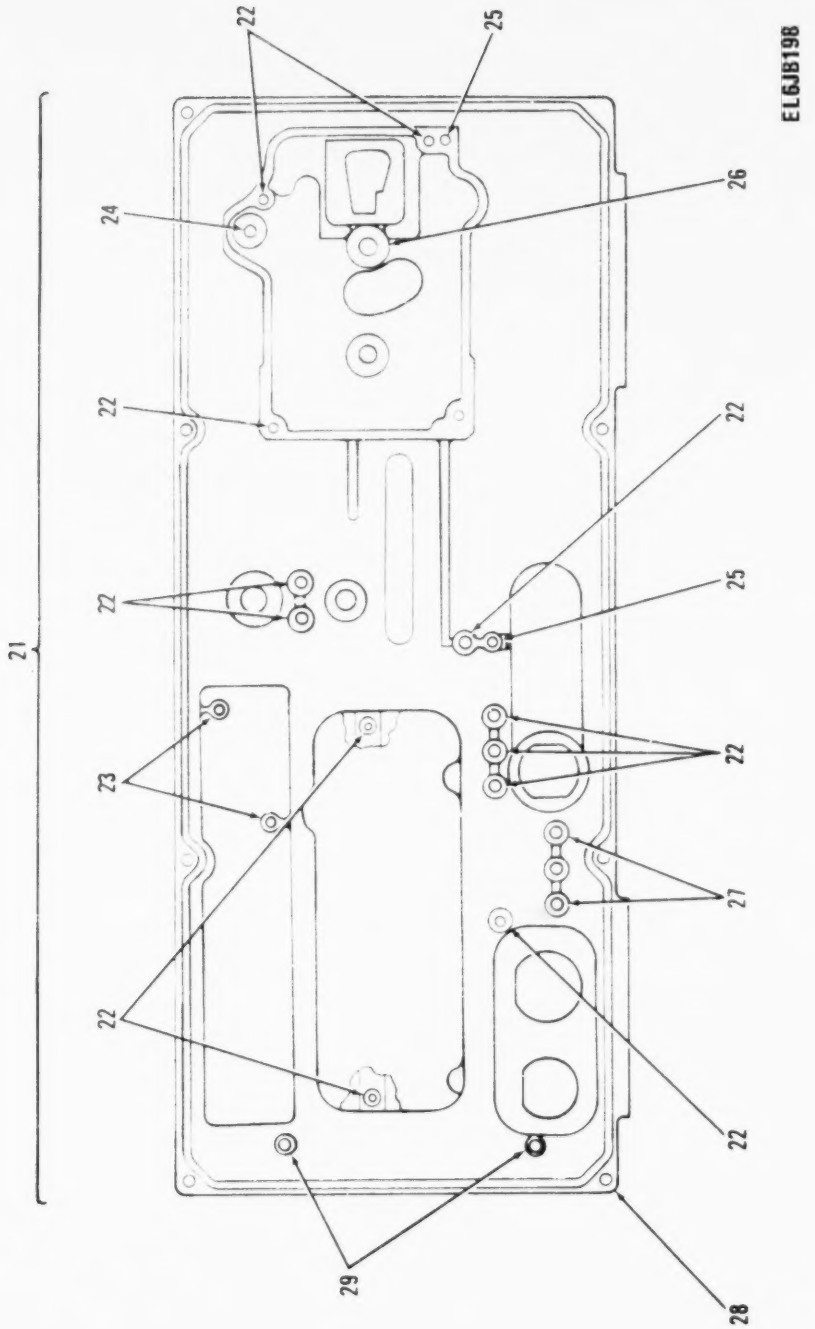

Figure 32. Panel Assembly (Sheet 2 of 2).

(1) ILLUSTRATION (a) FIG NO	(1) ILLUSTRATION (b) ITEM NO	(2) SMR CODE	(3) NATIONAL STOCK NUMBER	(4) FSCM	(5) PART NUMBER	(6) DESCRIPTION / USABLE ON CODE	(7) U/M	(8) QTY INC IN UNIT
						GROUP 01010901 PANEL ASSY		
						SM-D-414500		
32	1	PAHZZ	5305-00-405-8960	96906	MS35223-13	SCREW,MACHINE	EA	1
32	2	PAHZZ	5310-00-543-2410	96906	MS35338-40	WASHER,LOCK	EA	2
32	3	PAHZZ	5310-00-853-6422	80063	SM-B-414509	WASHER,FLAT	EA	1
32	4	XBHZZ		80063	SM-C-414513	BRACKET	EA	1
32	5	PAFZZ	5310-00-582-9176	30655	F92-1660-40	NUT,SELF-LOCKING,HE	EA	1
32	6	PAHZZ	5305-00-957-6636	96906	MS35190-223	SCREW,MACHINE	EA	1
32	7	PAHZZ	5820-00-858-6497	80063	SM-D-414510	LIGHT CONDUCTOR,PAN	EA	1
32	8	PAHZZ	5355-00-421-1714	80063	SM-C-414514	MASK,DIAL	EA	1
32	9	PAHZZ		80063	SM-B-921083	WINDOW,OBSERVATION	EA	1
32	10	PAHZZ	5330-00-442-2464	80063	SM-B-414511	GASKET	EA	1
32	11	XBHZZ		80063	SM-B-414519	HOLDER ASSY	EA	1
32	12	PAFZZ	5305-01-070-9617	80063	SM-B-283564	SCREW,MACHINE	EA	4
32	13	PAFZZ	5365-01-125-6552	80063	SM-C-414502-2	BUSHING,TAPERED	EA	4
32	14	PAFZZ	5340-00-400-7270	80063	SM-C-283573	HANDLE,BOW	EA	2
32	15	PAFZZ	5330-00-292-0577	96906	MS28775-307	PACKING,PREFORMED	EA	4
32	16	XDDZZ	5330-00-584-0266	96906	MS28775-010	PACKING,PREFORMED	EA	3
32	17	XBHZZ		80063	SM-B-414506	BRACKET	EA	1
32	18	PAHZZ	5305-00-993-0191	96906	MS35206-212	SCREW,MACHINE	EA	2
32	19	PAHZZ	5360-00-884-2488	80063	SM-B-414507	SPRING,HELICAL,EXTE	EA	1
32	20	PAHZZ	5820-00-664-1676	80063	SM-C-414508	ARM,SWITCH ACTUATOR	EA	1
32	21	PAHLL	5821-01-097-4570	80063	SM-D-414515	PANEL INSERT ASSY	EA	1
32	22	PADZZ	5340-00-853-6711	73957	N13832-18	INSERT,SCREW THREAD	EA	13
32	23	PADZZ	5340-00-853-6424	73957	N11240-18	INSERT,SCREW THREAD	EA	2
32	24	PADZZ	3120-00-884-2469	80063	SM-B-413898	BEARING,SLEEVE	EA	1
32	25	XDDZZ		73957	GP4-125X375-50	PIN,GRVD HDLS	EA	2
32	26	PADZZ	3120-00-897-6874	80063	SM-B-414518	BEARING,SLEEVE	EA	3
32	27	PADZZ	5340-00-823-5249	73957	NM13832-18	INSERT,SCREW THREAD	EA	2
32	28	XAHLL		80063	SM-D-283603	PANEL	EA	1
32	29	PADZZ	5340-00-815-4930	96906	MS21209C0615	INSERT,SCREW THREAD	EA	2

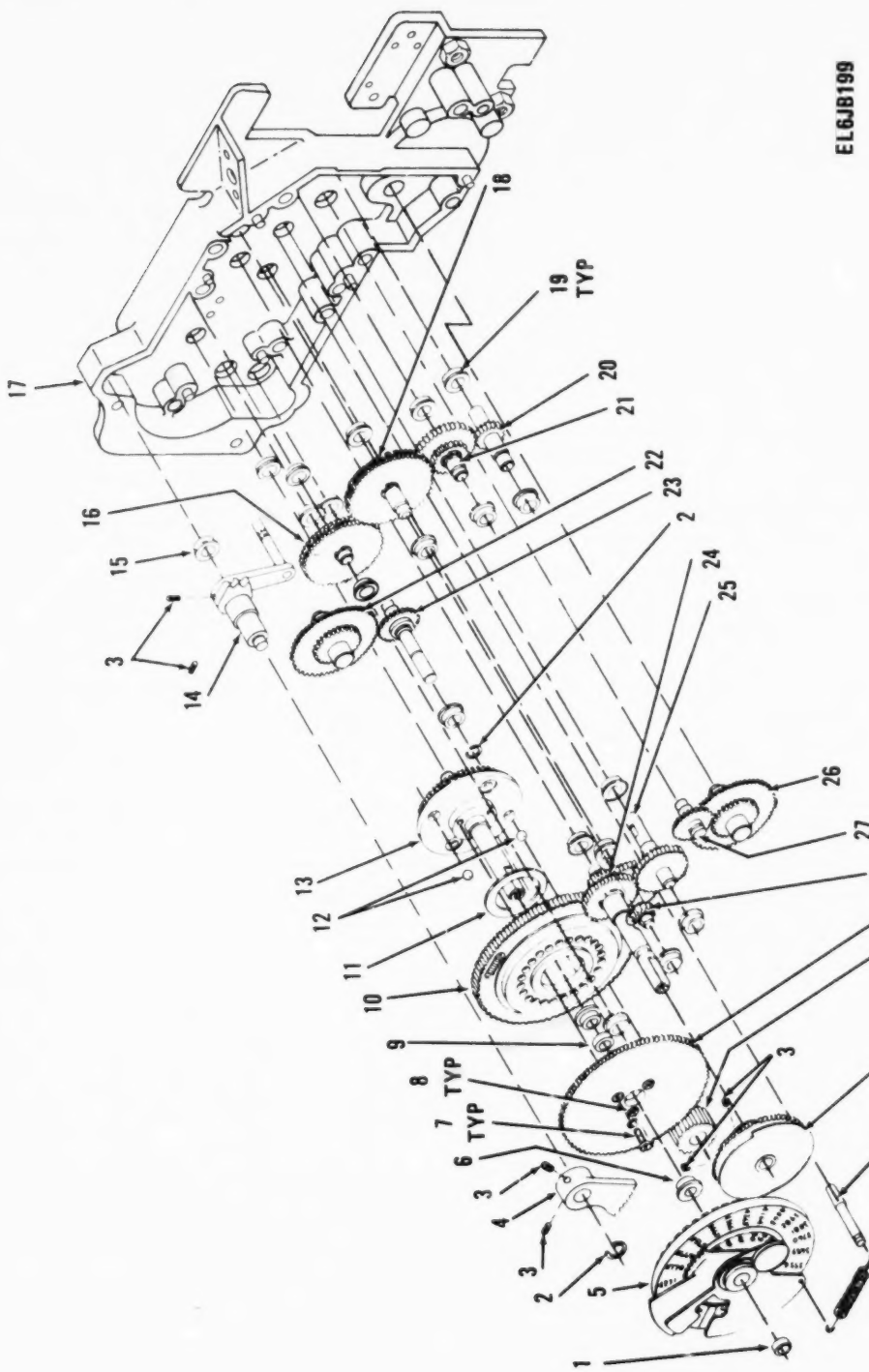

Figure 33. Gear Set Assembly (Sheet 1 of 5).

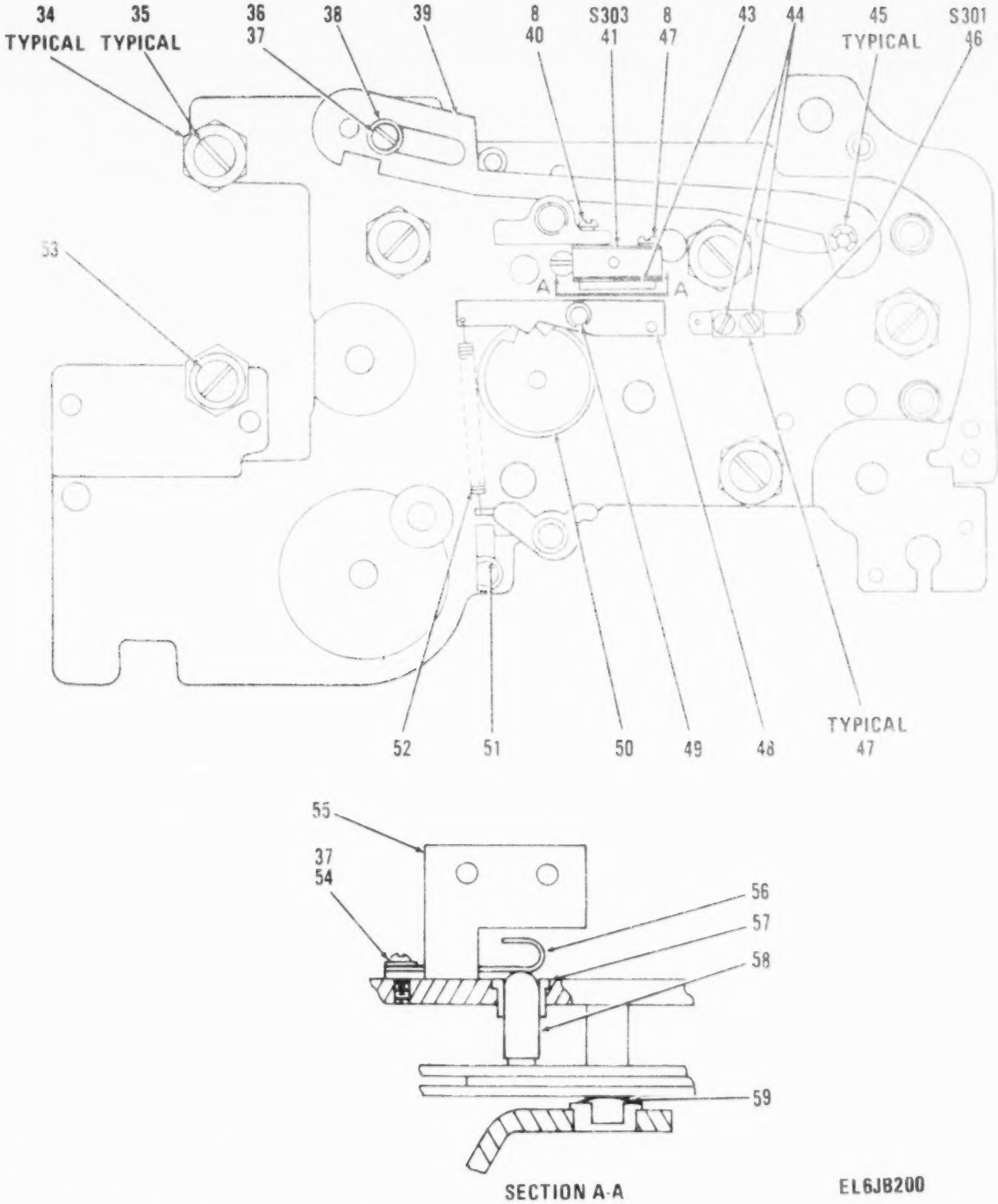

Figure 33. Gear Set Assembly (Sheet 2 of 5).

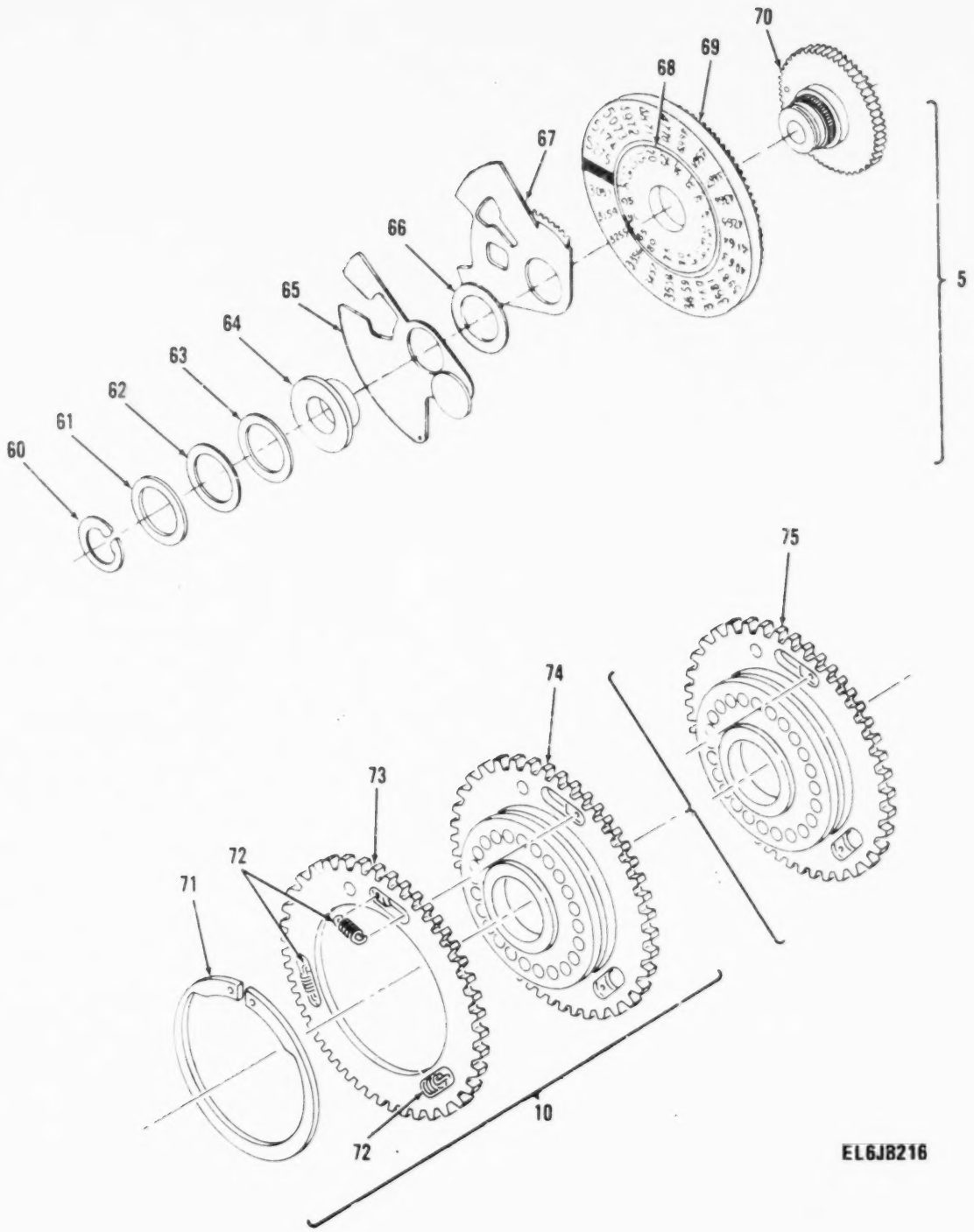

Figure 33. Gear Set Assembly (Sheet 3 of 5).

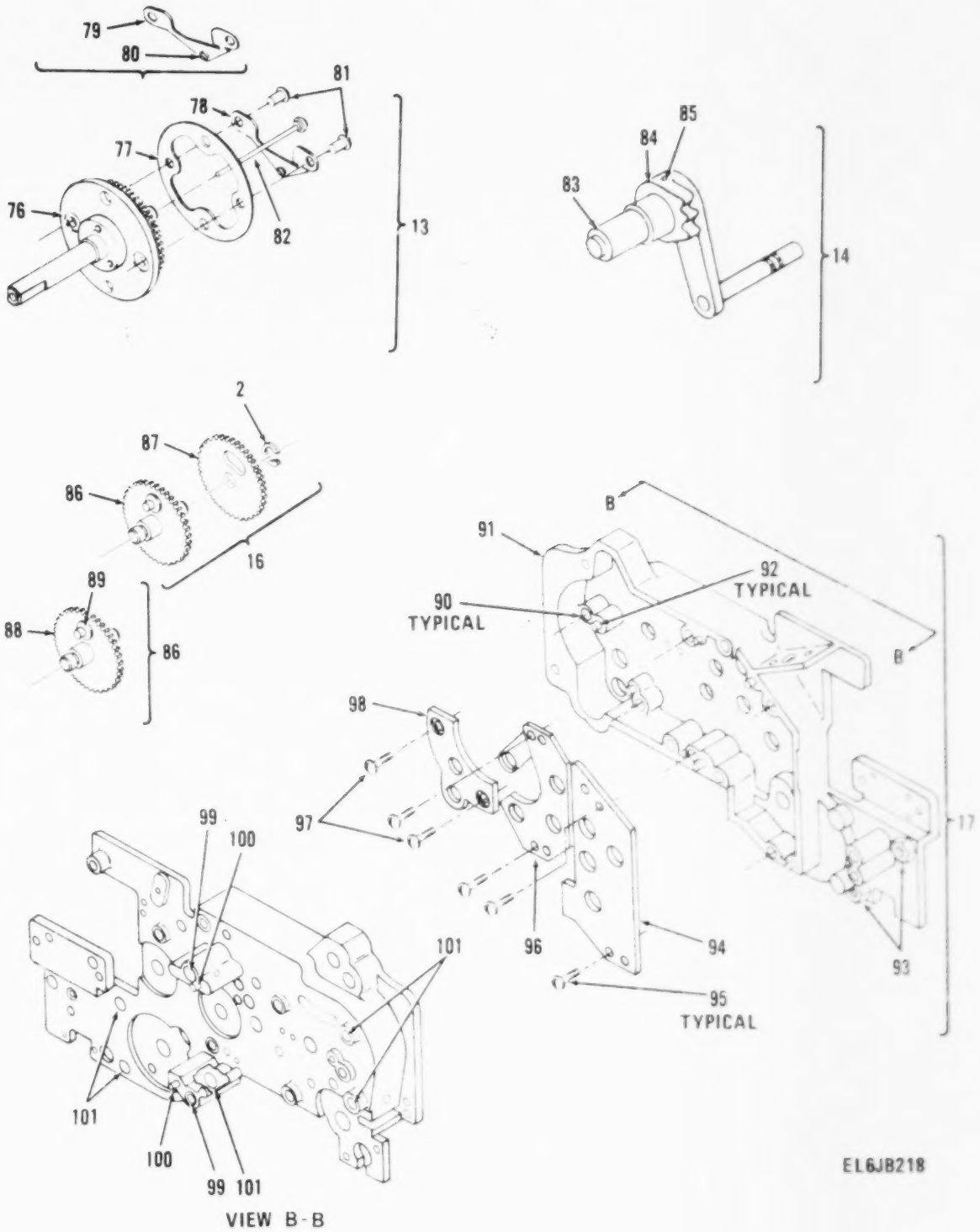

Figure 33. Gear Set Assembly (Sheet 4 of 5).

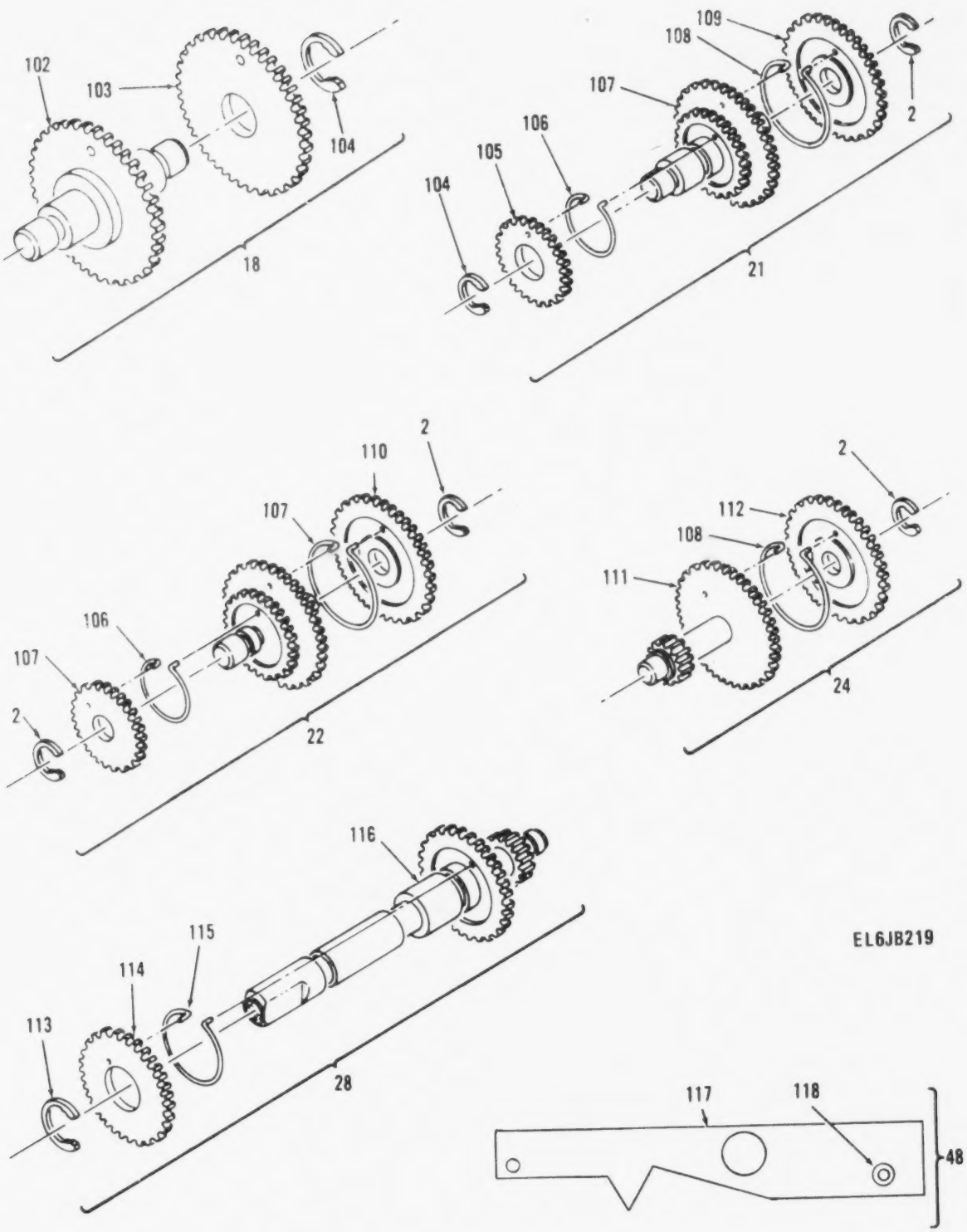

Figure 33. Gear Set Assembly (Sheet 5 of 5).

(1) ILLUSTRATION (a) FIG NO	(b) ITEM NO	(2) SMR CODE	(3) NATIONAL STOCK NUMBER	(4) FSCM	(5) PART NUMBER	(6) DESCRIPTION USABLE ON CODE	(7) U/M	(8) QTY INC IN UNIT
						GROUP 01010902 GEAR SET ASSEMBLY		
						SM-D-414525		
33	1	PADZZ	3110-00-446-1726	83086	SR168PPK25-7	BEARING,BALL,ANNULA	EA	1
33	2	PADZZ	5365-00-598-1493	79136	5103-18-H	RING,RETAINING	EA	2
33	3	PADZZ	5305-00-719-5329	96906	MS51963-20	SETSCREW	EA	2
33	4	PADDL	5820-00-832-5523	80063	SM-C-414534	GEAR ASSEMBLY	EA	1
33	5	PADDL	5820-00-832-5589	80063	SM-D-414604	DIAL ASSEMBLY	EA	1
33	6	PADZZ		38443	FC-1624-FF	BALL,BEARING	EA	1
33	7	PADZZ	5305-00-762-7482	96906	MS35206-202	SCREW,MACHINE	EA	3
33	8	PADZZ	5310-00-543-5060	96906	MS35338-39	WASHER,LOCK	EA	3
33	9	PADZZ		80063	SM-B-414548	SPACER,SLEEVE	EA	1
33	10	PADDA	5820-00-896-1868	80063	SM-C-414579	GEAR ASSEMBLY	EA	1
33	11	XDDZZ		80063	SM-B-414553	SPACER	EA	1
33	12	PADZZ	3110-00-151-9206	96906	MS19060-4810	BALL,BEARING	EA	2
33	13	PADDL	5930-00-884-2576	80063	SM-C-414560	SWITCH	EA	1
33	14	PADDL	5820-00-832-5504	80063	SM-B-414596	BAND SWITCH ASSEMBL	EA	1
33	15	PADZZ	3120-00-884-2469	80063	SM-B-413898	BEARING,SLEEVE	EA	1
33	16	PADDL	5820-00-896-1877	80063	SM-C-414587	GEAR ASSEMBLY	EA	1
33	17	XDDDL		80063	SM-D-414598	GEAR HSG ASSY	EA	1
33	18	PADDL	5820-00-896-1885	80063	SM-C-414591	GEAR ASSEMBLY	EA	1
33	19	PADZZ		38443	FC-1220-FF	BALL,BEARING	EA	22
33	20	XDDZZ		80063	SM-C-414528	GEARSHAFT,SPUR	EA	1
33	21	PADDL	5820-00-896-1865	80063	SM-C-414576	GEAR ASSEMBLY	EA	1
33	22	PADDL	5820-00-832-5530	80063	SM-D-414554	GEAR ASSEMBLY	EA	1
33	23	XDDZZ		80063	SM-C-414533	GEARSHAFT,SPUR	EA	1
33	24	PADDL	5820-00-896-1861	80063	SM-D-414572	GEAR ASSEMBLY	EA	1
33	25	XDDZZ		80063	SM-C-414529	GEARSHAFT,SPUR	EA	1
33	26	XDDZZ		80063	SM-C-414531	GEARSHAFT,SPUR	EA	1
33	27	XDDZZ		80063	SM-C-414530	GEARSHAFT,SPUR	EA	1
33	28	PADDL	5820-00-896-1870	80063	SM-C-414584	GEAR ASSEMBLY	EA	1
33	29	XDDZZ		80063	SM-C-414540	GEAR,SPUR	EA	1
33	30	XDDZZ		80063	SM-B-414527	GEAR,SPUR	EA	1
33	31	XDDZZ		80063	SM-D-414532	GEAR-CAM	EA	1
33	32	XDDZZ		73957	SM-B-414535-1	PIN,GRVD HD	EA	1
33	33	PADZZ	5360-00-884-2488	80063	SM-B-414507	SPRING,HELICAL,EXTE	EA	1
33	34	PAHZZ	5310-00-138-9935	02615	S4581	NUT,SELF-LOCKING,HE	EA	6
33	35	PAHZZ	5305-00-151-6887	80063	SM-C-414538-1	SCREW,SHOULDER	EA	5
33	36	PAHZZ	5305-00-558-4889	96906	MS35223-14	SCREW,MACHINE	EA	1
33	37	PAHZZ	5310-00-543-2410	96906	MS35338-40	WASHER,LOCK	EA	1
33	38	PAHZZ	5365-00-180-7778	80063	SM-B-414537	SPACER,SLEEVE	EA	1

(1) ILLUSTRATION (a) FIG NO	(b) ITEM NO	(2) SMR CODE	(3) NATIONAL STOCK NUMBER	(4) FSCM	(5) PART NUMBER	(6) DESCRIPTION USABLE ON CODE	(7) U/M	(8) QTY INC IN UNIT
33	39	XBHZZ		80063	SM-C-414536	ACTUATOR ARM ASSY	EA	1
33	40	PAHZZ		96906	MS35223-8	SCREW,MACHINE	EA	1
33	41	PAHZZ	5930-00-501-1787	91929	11SM3	SWITCH,SENSITIVE	EA	1
33	42	PAHZZ	5305-00-958-6382	96906	MS35206-206	SCREW,MACHINE	EA	1
33	43	PAHZZ	5310-00-147-3270	80063	SM-C-414552	NUT STRIP	EA	1
33	44	PADZZ	5305-00-139-7163	18359	1322-3	SCREW,MACHINE	EA	2
33	45	PAHZZ	5365-00-816-4239	96906	MS16633-1012	RING,RETAINING	EA	2
33	46	XDDZZ		80063	SM-B-414543	CONTACT,ELEC	EA	1
33	47	XDDZZ		80063	SM-B-414542	INSULATOR,PLATE	EA	2
33	48	PADZZ	5820-00-832-5521	80063	SM-B-414626	DETENT ASSEMBLY	EA	1
33	49	XDDZZ		80063	SM-B-414549	PIN	EA	1
33	50	PADZZ	5930-00-823-0756	80063	SM-B-414550	DETENT,SWITCH	EA	1
33	51	XDDZZ		73957	SM-B-414535-2	PIN,GRVD HD	EA	1
33	52	PADZZ		80063	SM-B-414551	SPRING,HELICAL EXTE	EA	1
33	53	PAHZZ	5305-00-139-7094	80063	SM-C-414538-3	SCREW,SHOULDER	EA	1
33	54	PADZZ	5305-00-405-8960	96906	MS35223-13	SCREW,MACHINE	EA	1
33	55	XDDZZ		80063	SM-B-414547	BRACKET	EA	1
33	56	XDDZZ		80063	SM-B-414546	SPRING	EA	1
33	57	PADZZ		80063	SM-B-414544	BUSHING,SLEEVE	EA	1
33	58	XDDZZ		80063	SM-B-414545	PIN,STRAIGHT HDLS	EA	1
33	59	PAHZZ		73287	B0W41956	WASHER,SPRING TENSI	EA	1
33	60	PADZZ		79136	5103-50-W	RING,RETAINING	EA	1
33	61	XDDZZ		80063	SM-B-414612-1	SHIM	EA	V
33	62	XDDZZ		80063	SM-B-414612-2	SHIM	EA	V
33	63	XDDZZ		80063	SM-B-414612-3	SHIM	EA	V
33	64	XDDZZ		80063	SM-B-414615	BUSHING	EA	1
33	65	XDDZZ		80063	SM-B-414616	MASK ASSY	EA	1
33	66	XDDZZ		80063	SM-B-414614	SHIM	EA	1
33	67	XDDZZ		80063	SM-B-414608	MASK ASSY	EA	1
33	68	PADZZ		80063	SM-C-414607	DIAL	EA	1
33	69	XDDZZ		80063	SM-C-414621	DIAL ASSY	EA	1
33	70	XDDZZ		80063	SM-D-414606	GEARSHAFT,SPUR	EA	1
33	71	PADZZ	5365-00-140-2019	96906	MS16626-4177	RING,RETAINING	EA	1
33	72	XDDZZ		80063	SM-B-414583	SPRING,HELICAL	EA	3
33	73	XDDZZ		80063	SM-C-414582	GEAR,SPUR	EA	1
33	74	XADZZ		80063	SM-D-414581	RECEIVER,RADIO	EA	1
33	75	XDDZZ		80063	SM-D-414581-2	GEAR-DETENT	EA	1
33	76	XDDZZ		80063	SM-D-414562	GEARSHAFT,SPUR	EA	1
33	77	XDDZZ		80063	SM-C-414563-2	DETENT	EA	1
33	78	XDDZZ		80063	SM-B-414564	CONTACT ASSY	EA	1

(1) ILLUSTRATION (a) FIG NO	(b) ITEM NO	(2) SMR CODE	(3) NATIONAL STOCK NUMBER	(4) FSCM	(5) PART NUMBER	(6) DESCRIPTION USABLE ON CODE	(7) U/M	(8) QTY INC IN UNIT
33	79	XDDZZ		80063	SM-C-414566	SPRING	EA	1
33	80	XDDZZ		98291	FT-SM-706-P62	TERMINAL,STUD	EA	1
33	81	XDDZZ		96906	MS20450C8-4	RIVET,TUBULAR	EA	2
33	82	XDDDL		80063	SM-B-414568	ELEC LEAD ASSY	EA	1
33	83	XDDZZ		80063	SM-B-414596	SHAFT,SHLDR	EA	1
33	84	XDDZZ		80063	SM-C-414597	ACTUATOR ASSY	EA	1
33	85	PADZZ	5315-00-531-7880	96906	MS171436	PIN,SPRING	EA	1
33	86	XDDDL		80063	SM-C-414966	GEAR-PIN ASSY	EA	1
33	87	XDDZZ		80063	SM-C-414590-2	GEAR,SPUR	EA	1
33	88	XDDDL		80063	SM-D-414589	GEARSHAFT,SPUR	EA	1
33	89	XDDZZ		80063	SM-B-414899	PIN	EA	1
33	90	PADZZ	5340-00-853-6424	73957	N11240-18	INSERT,SCREW THREAD	EA	6
33	91	XADZZ		80063	SM-D-414600	HOUSING,GEAR	EA	1
33	92	PADZZ	5315-00-682-1727	96906	MS16555-625	PIN,STRAIGHT,HEADLE	EA	6
33	93	PADZZ	5310-00-297-9067	72962	22NC3-62	NUT,SELF-LOCKING,CL	EA	2
33	94	XDDZZ		80063	SM-C-414603	PLATE	EA	1
33	95	PADZZ	5305-00-558-4889	96906	MS35223-14	SCREW,MACHINE	EA	2
33	96	XDDZZ		80063	SM-D-414602	PLATE	EA	1
33	97	PADZZ	5305-00-405-8960	96906	MS35223-13	SCREW,MACHINE	EA	2
33	98	XDDZZ		80063	SM-C-414601	PLATE	EA	1
33	99	PADZZ	5340-00-853-6711	73957	N13832-18	INSERT,SCREW THREAD	EA	2
33	100	PADZZ	5315-00-194-0617	73957	GP4-062X375-50	PIN,GROOVED,HEADLES	EA	2
33	101	PADZZ	5340-00-823-5249	73957	NM13832-18	INSERT,SCREW THREAD	EA	5
33	102	XDDZZ		80063	SM-D-414593	GEARSHAFT,SPUR	EA	1
33	103	XDDDL		80063	SM-C-414590-1	GEAR	EA	1
33	104	PADZZ	5365-00-550-5937	79136	5103-25-H	RING,RETAINING	EA	1
33	105	XDDZZ		80063	SM-C-414558-2	GEAR,SPUR	EA	1
33	106	PADZZ	5365-00-139-7211	80063	SM-B-414559	RING,RETAINING	EA	1
33	107	XDDDL		80063	SM-D-414578	GEARSHAFT,SPUR	EA	1
33	108	PADZZ	5365-00-139-7213	80063	SM-C-413919-7	RING,RETAINING	EA	1
33	109	XDDZZ		80063	SM-C-414557-1	GEAR,SPUR	EA	1
33	110	XDDZZ		80063	SM-C-414558-1	GEAR,SPUR	EA	1
33	111	XDDDL		80063	SM-D-414586	GEARSHAFT,SPUR	EA	1
33	112	XDDZZ		80063	SM-C-414557-2	GEAR,SPUR	EA	1
33	113	PADZZ	5365-00-845-0286	79136	5103-31-H	RING,RETAINING	EA	1
33	114	XDDZZ		80063	SM-C-414575-2	GEAR,SPUR	EA	1
33	115	PADZZ	5360-00-157-7634	80063	SM-C-413919-6	SPRING SPECIAL	EA	1
33	116	XDDDL		80063	SM-D-414574	GEARSHAFT,SPUR	EA	1

(1) ILLUSTRATION (a) FIG NO	(1) ILLUSTRATION (b) ITEM NO	(2) SMR CODE	(3) NATIONAL STOCK NUMBER	(4) FSCM	(5) PART NUMBER	(6) DESCRIPTION USABLE ON CODE	(7) U.M.	(8) QTY INC IN UNIT
33	117	XDDZZ		80063	SM-B-414628	DETENT.....	EA	1
33	118	PADZZ	5315-00-614-3586	96906	MS16562-212	PIN,SPRING.....	EA	1

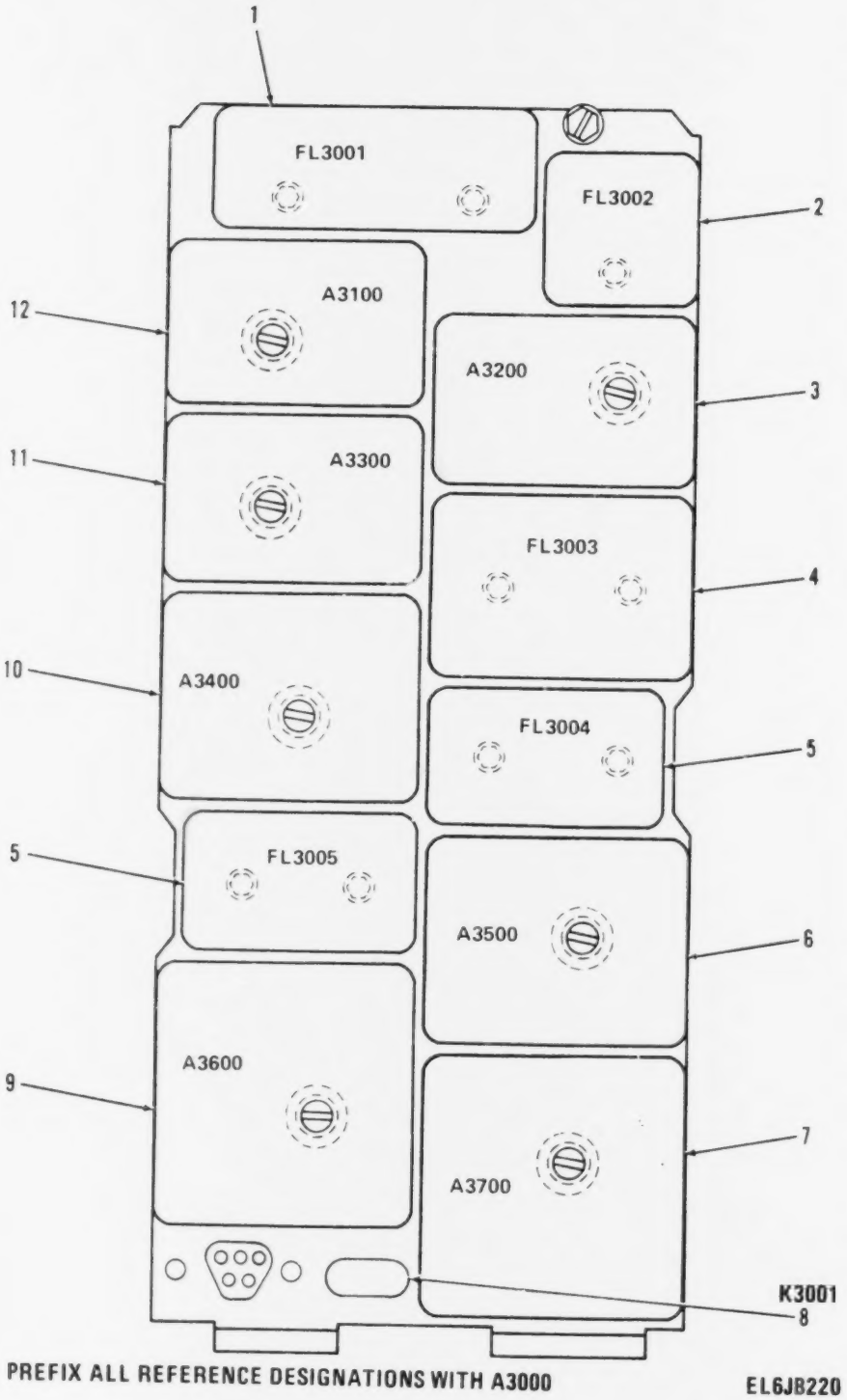

Figure 34. Crystal Reference System Assembly (Sheet 1 of 3).

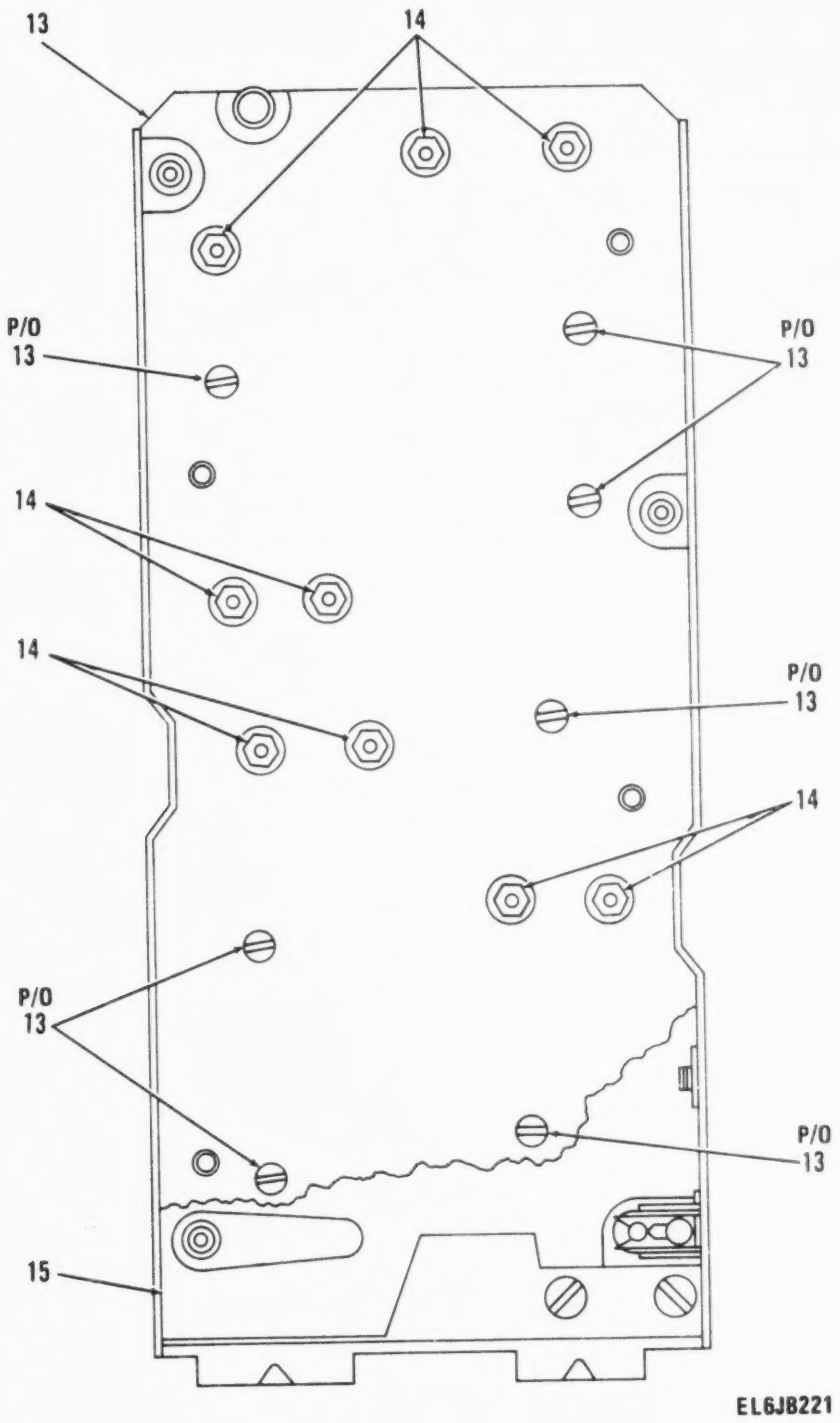

Figure 34. Crystal Reference System Assembly (Sheet 2 of 3).

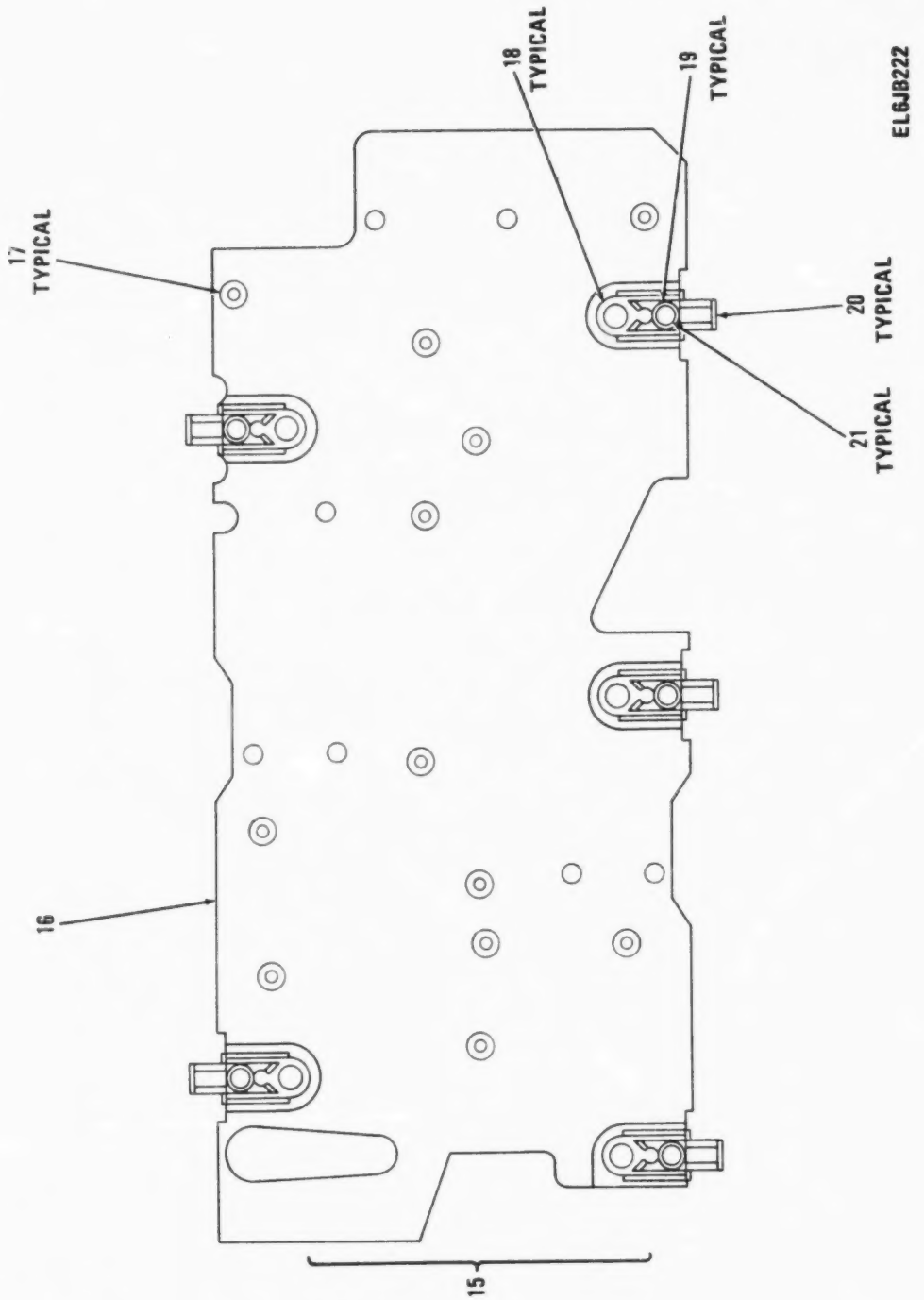

Figure 34. Crystal Reference System Assembly (Sheet 3 of 3).

(1) ILLUSTRATION (a) FIG NO	(1) ILLUSTRATION (b) ITEM NO	(2) SMR CODE	(3) NATIONAL STOCK NUMBER	(4) FSCM	(5) PART NUMBER	(6) DESCRIPTION USABLE ON CODE	(7) U/M	(8) QTY INC IN UNIT
						GROUP 0102 CRYSTAL REFERENCE SYSTEM		
						ASSEMBLY A3000 AND A3000A		
						SM-D-413519		
34	1	PAFZZ	5915-00-853-6528	80063	SM-D-413522	FILTER,LOW PASS 1000 OHMS,PORM 30 PCT INPUT/OUTPUT IMPD AT 5 MHZ	EA	1
34	2	PAFZZ	5915-00-853-8583	80063	SM-D-413521	FILTER,HIGH PASS 50 OHMS,PORM 20 PCT INPUT/OUTPUT IMPD AT 50 MHZ	EA	1
34	3	PAFDL		80063	SM-B-413592	BALANCE MIXER ASSY	EA	1
34	4	PAFZZ	5915-00-899-4169	80063	SM-D-413524	FILTER,BAND PASS 550 OHMS MIN INPUT/OUTPUT IMPD AT 54.35 MHZ PORM 50 KHZ	EA	1
34	5	PAFZZ	5915-00-899-7910	80063	SM-D-413523	FILTER,BAND PASS 510 OHMS,PORM 30 PCT INPUT/OUTPUT IMPD AT 5.625 MHZ	EA	2
34	6	PAFDL	5821-00-978-8906	80063	SM-B-413650	RECEIVER-TRANSMITTE	EA	1
34	7	PAFDL	5820-00-853-5969	80063	SM-B-413699	DISCRIMINATOR,PHASE	EA	1
34	8	PAFZZ	5945-00-853-6450	04221	95-3336	RELAY,ELECTROMAGNET SPST,FORM A,COIL RESISTANCE 2000 OHMS	EA	2
34	9	PAFDL	5820-00-853-5970	80063	SM-B-413670	CONTROL,ELECTRICAL	EA	1
34	10	PAFDL	5950-00-126-5064	80063	SM-B-413634	TRANSFORMER,RADIO F	EA	1
34	11	PAFDL	5820-00-853-5959	80063	SM-B-413611	RECEIVER,RADIO	EA	1
34	12	PAFDL	5820-00-853-5957	80063	SM-B-413559	RECEIVER,RADIO	EA	1
34	13	PAFZZ	5820-01-129-4157	80063	SM-D-413528	CHASSIS,ELECTRICAL	EA	1
34	14	PAFZZ	5310-00-582-9176	30655	F92-1660-40	NUT,SELF-LOCKING,HE	EA	1
34	15	PAFFF	5820-00-858-6483	80063	SM-D-413551	PLATE ASSEMBLY,ELEC	EA	1
34	16	XAFZZ		80063	SM-D-413553	PLATE,SHIELD	EA	1
34	17	PAFZZ	3120-00-897-6873	80063	SM-B-413554	BUSHING,SLEEVE	EA	12
34	18	XAFZZ		88447	38871-G-2	GUIDE	EA	5
34	19	XAFZZ		88447	38891-M	WASHER,SPR TNSN	EA	5
34	20	PAFZZ	5325-00-262-9130	88447	38881-L	LATCH,SNAPSLIDE FAS	EA	5
34	21	XAFZZ		88447	38901-R	RIVET,TUBULAR	EA	5

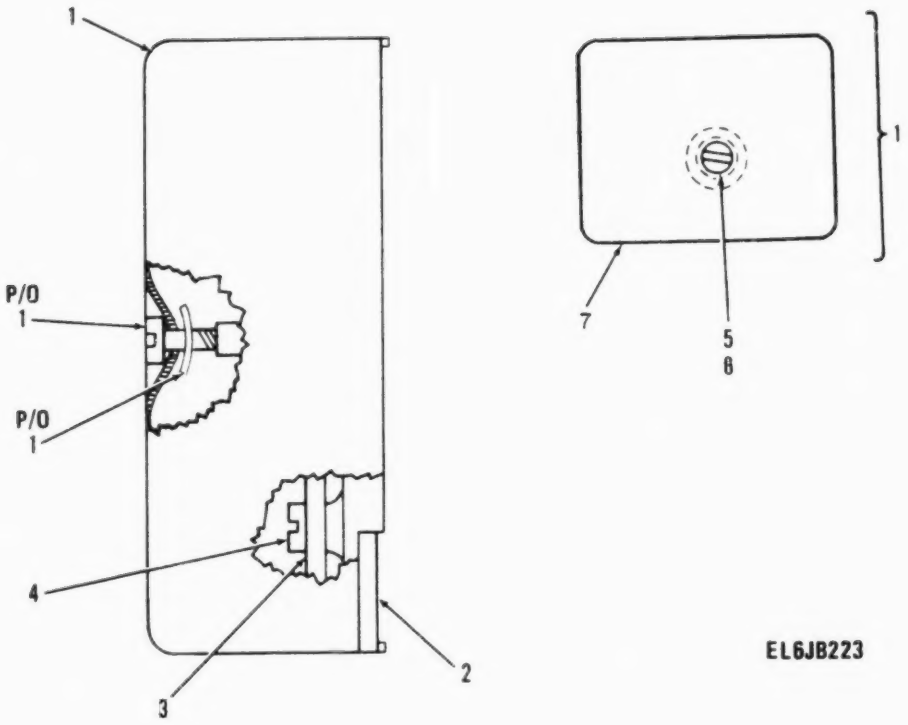

Figure 35. Harmonic Generator Assembly

(1) ILLUSTRATION (a) FIG NO	(1) ILLUSTRATION (b) ITEM NO	(2) SMR CODE	(3) NATIONAL STOCK NUMBER	(4) FSCM	(5) PART NUMBER	(6) DESCRIPTION / USABLE ON CODE	(7) U/M	(8) QTY INC IN UNIT
						GROUP 010201 HARMONIC GENERATOR ASSY		
						A31000 SM-B-413559		
35	1	XDDZZ		80063	SM-B-413562	COVER ASSY	EA	1
35	2	XDDZZ		80063	SM-D-413561	BASE	EA	1
35	3	XDDDL		80063	SM-D-413565	OSCILLATOR RF ASSY	EA	1
35	4	PADZZ	5305-00-855-0962	96906	MS24629-3	SCREW,TAPPING,THREA	EA	2
35	5	PADZZ	5305-00-988-5747	83486	43-04-04120CD PL	SCREW,ASSEMBLED WAS	EA	1
35	6	PADZZ		78553	C-18695SS-012	NUT,SHEET SPRING	EA	1
35	7	XDDZZ		80063	SM-C-413564	COVER	EA	1

LEGEND

REF DES	ITEM NO	REF DES	ITEM NO	REF DES	ITEM NO	REF DES	ITEM NO
CR3101	1	C3104	4	L3102	8	R3105	14
CR3102	2	C3105	5	Q3101	9	R3106	15
CR3103	2	C3106	6	R3101	10	R3107	16
C3101	3	C3107	3	R3102	11	T3101	17
C3102	4	C3108	3	R3103	12	Y3101	18
C3103	4	L3101	7	R3104	13		

PREFIX ALL REFERENCE DESIGNATIONS WITH A3000A3100

EL6JB224

Figure 36. Oscillator, Radio Frequency (Sheet 1 of 2).

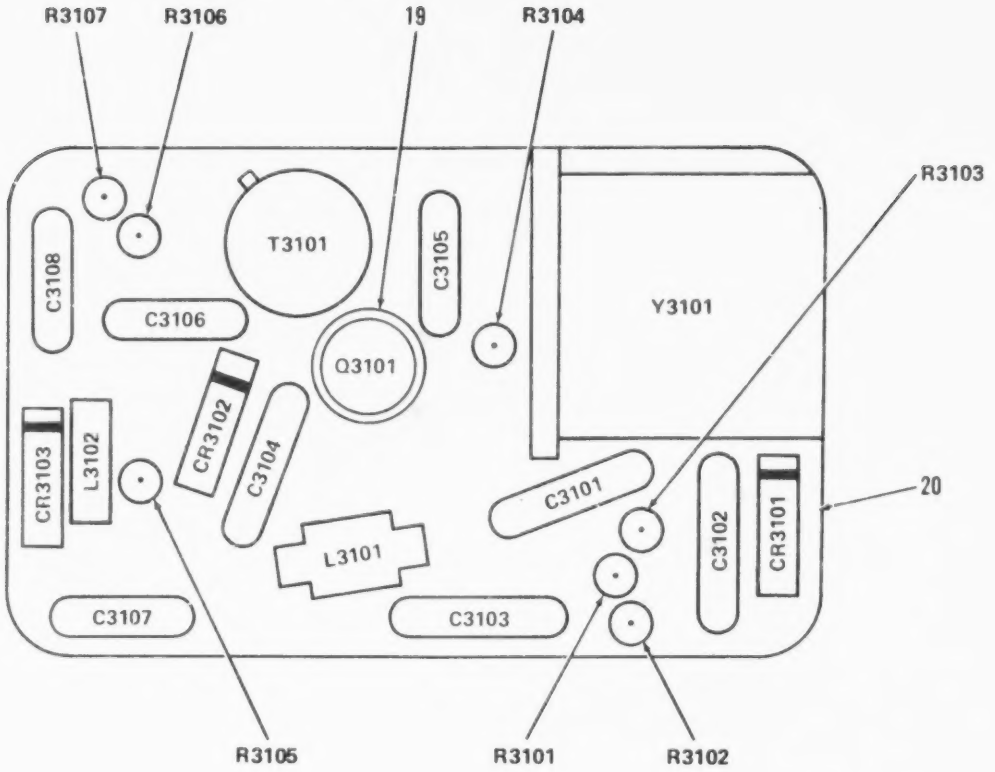

PREFIX ALL REFERENCE DESIGNATIONS WITH A3000A3100

EL6JB225

Figure 36. Oscillator, Radio Frequency (Sheet 2 of 2).

(1) ILLUSTRATION (a) FIG NO	(1) ILLUSTRATION (b) ITEM NO	(2) SMR CODE	(3) NATIONAL STOCK NUMBER	(4) FSCM	(5) PART NUMBER	(6) DESCRIPTION USABLE ON CODE	(7) U/M	(8) QTY INC IN UNIT
						GROUP 01020101 OSCILLATOR,RADIO FREQ		
36	1	PADZZ	5961-00-752-6163	81349	JAN1N965B	SEMICONDUCTOR DEVIC	EA	1
36	2	PADZZ	5961-00-842-9864	81349	JAN1N914	SEMICONDUCTOR DEVIC	EA	2
36	3	PADZZ	5910-00-892-3027	80063	SM-C-413567-1	CAPACITOR,FIXED,CER .001 UF,PORM 20 PCT,100 VDCW	EA	5
36	4	PADZZ	5910-00-857-5305	18796	855-222X5S0-103M	CAPACITOR,FIXED,CER .01 UF,PORM 20 PCT,100 VDCW	EA	5
36	5	PADZZ	5910-00-890-0554	80063	SM-C-413567-3	CAPACITOR,FIXED,CER .0047 UF,PORM 20 PCT,100 VDCW	EA	1
36	6	PADZZ	5910-00-163-7283	81349	CMR05F181F0DM	CAPACITOR,FIXED,MIC	EA	1
36	7	PADZZ	5950-00-891-9158	80063	SM-C-413577	COIL,RADIO,FREQUEN 1 MILLIH INDUCTANCE PORM 10 PCT	EA	1
36	8	PADZZ	5950-00-043-0423	96906	MS14046-8	COIL,RADIO FREQUENC	EA	1
36	9	XADZZ		81349	JAN2N499A	TRANSISTOR	EA	1
36	10	PADZZ	5905-00-106-1356	81349	RCR07G152JS	RESISTOR,FIXED,COMP	EA	1
36	11	PADZZ	5905-00-105-7768	81349	RCR07G561JS	RESISTOR,FIXED,COMP	EA	1
36	12	PADZZ	5905-00-126-6683	81349	RCR07G332JS	RESISTOR,FIXED,COMP	EA	1
36	13	PADZZ	5905-00-110-7622	81349	RCR07G682JS	RESISTOR,FIXED,COMP	EA	1
36	14	PADZZ	5905-00-106-1278	81349	RCR07G123JS	RESISTOR,FIXED,COMP	EA	1
36	15	PADZZ	5905-00-116-8555	81349	RCR07G153JS	RESISTOR,FIXED,COMP	EA	1
36	16	PADZZ	5905-00-110-7620	81349	RCR07G102JS	RESISTOR,FIXED,COMP	EA	1
36	17	PADZZ	5950-01-011-3416	80063	SM-D-413582	TRANSFORMER,RADIO F	EA	1
36	18	PADZZ		80063	SM-C-413570	CRYSTAL UNIT ASSY 1.0 MHZ OPER FREQ	EA	1
36	19	PADZZ	5970-00-989-8333	07047	A-10042	INSULATOR,DISK	EA	1
36	20	XADZZ		80063	SM-C-413571	CIRCUIT BD ASSY	EA	1

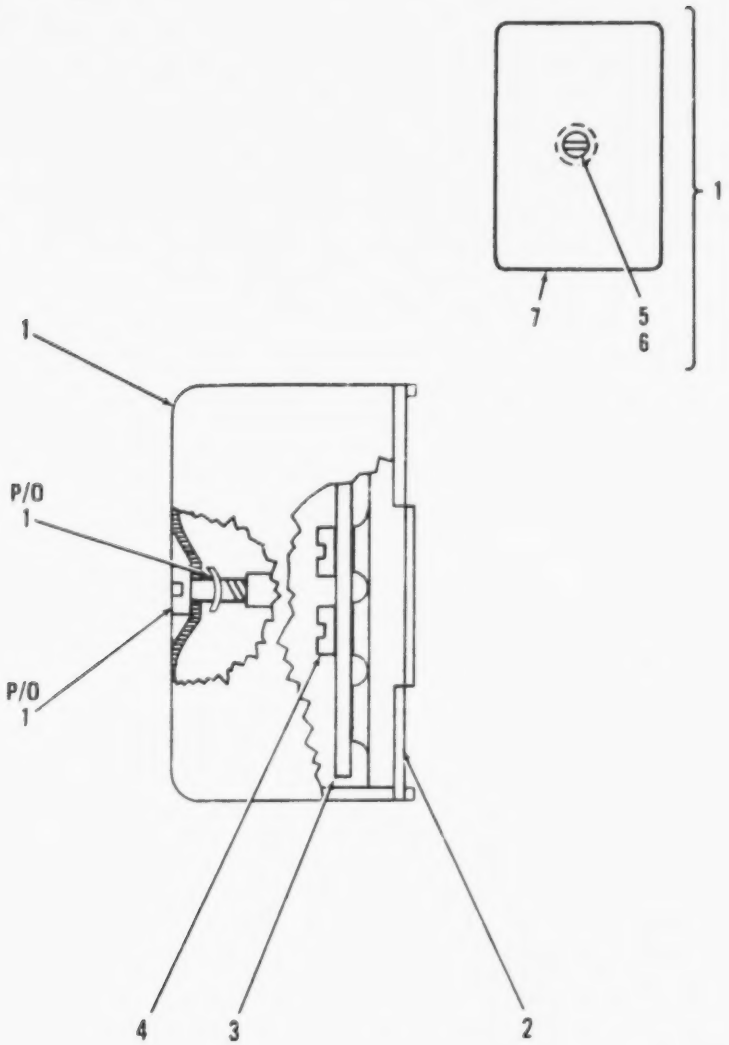

Figure 37. Balance Mixer Assembly

(1) ILLUSTRATION (a) FIG NO	(1) ILLUSTRATION (b) ITEM NO	(2) SMR CODE	(3) NATIONAL STOCK NUMBER	(4) FSCM	(5) PART NUMBER	(6) DESCRIPTION USABLE ON CODE	(7) U/M	(8) QTY INC IN UNIT
						GROUP 010202 BALANCED MIXER ASSEMBLY		
						A3200 SM-B-413592		
37	1	XDDDL		80063	SM-B-413595	COVER ASSY	EA	1
37	2	XDDZZ		80063	SM-D-413594	BASE	EA	1
37	3	XDDDL		80063	SM-D-413598	AMPL-MIXER ASSY	EA	1
37	4	PADZZ	5305-00-855-0962	96906	MS24629-3	SCREW,TAPPING,THREA	EA	2
37	5	PADZZ	5305-00-988-5747	83486	43-04-04120C0 PL	SCREW,ASSEMBLED WA	EA	1
37	6	PADZZ		78553	C-18695SS-012	NUT,SHEET SPRING	EA	1
37	7	XDDZZ		80063	SM-C-413597	COVER	EA	1

LEGEND

REF DES	ITEM NO	REF DES	ITEM NO	REF DES	ITEM NO	REF DES	ITEM NO
CR3201	1	C3205	3	R3202	8	R3207	11
CR3202	1	C3206	4	R3203	9	R3208	12
C3201	2	C3207	4	R3204	10	R3209	10
C3202	2	L3201	5	R3205	10	T3201	13
C3203	2	Q3201	6	R3206	9	T3202	14
C3204	2	R3201	7				

PREFIX ALL REFERENCE DESIGNATIONS WITH A3000A3200

EL6JB227

Figure 38. Amplifier-Mixer Assembly (Sheet 1 of 2).

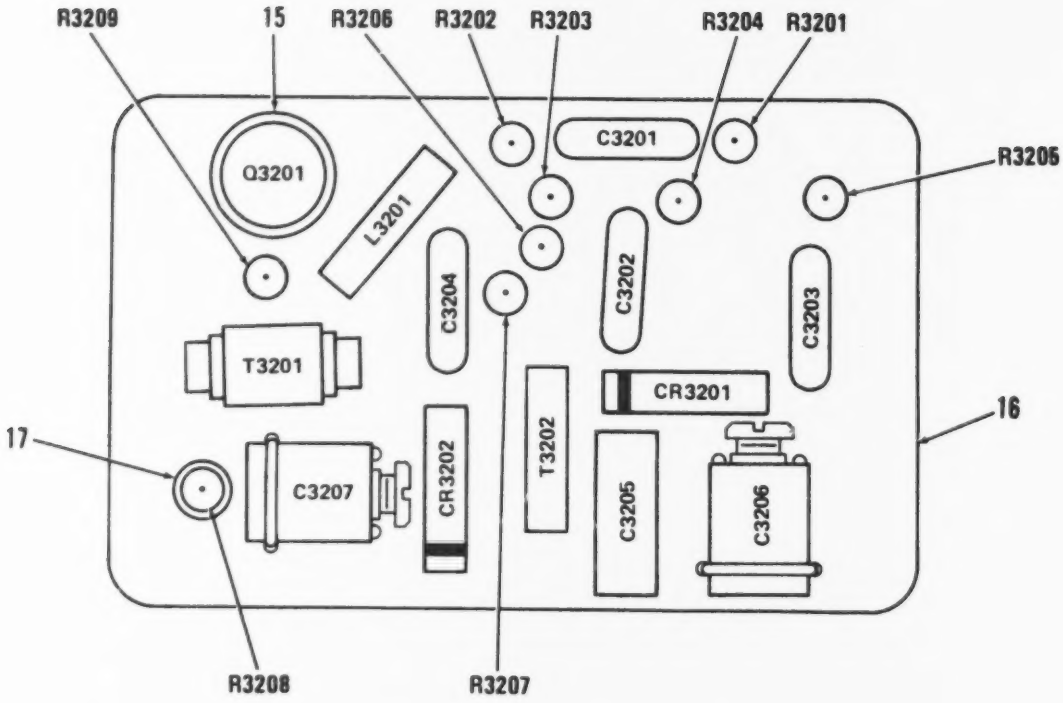

Figure 38. Amplifier-Mixer Assembly (Sheet 2 of 2).

(1) ILLUSTRATION (a) FIG NO	(1) ILLUSTRATION (b) ITEM NO	(2) SMR CODE	(3) NATIONAL STOCK NUMBER	(4) FSCM	(5) PART NUMBER	(6) DESCRIPTION / USABLE ON CODE	(7) U/M	(8) QTY INC IN UNIT
						GROUP 01020201 AMPLIFIER-MIXER ASSY		
38	1	PADZZ	5961-00-938-5252	03877	1N3559	SEMICONDUCTOR DEVIC	EA	1
38	2	PADZZ	5910-00-892-3027	80063	SM-C-413567-1	CAPACITOR,FIXED,CER .001 UF,PORM 20 PCT,100 VDCW	EA	4
38	3	PADZZ	5910-00-881-0337	81349	CC22RH120G	CAPACITOR,FIXED,CER	EA	1
38	4	PADZZ	5910-00-924-4307	81349	PC51J5R5	CAPACITOR,VARIABLE,	EA	2
38	5	XDDZZ		80063	SM-C-414142	COIL ASSEMBLY 25 VDCW,15 MILLIAMP CURRENT 4.4 TO 6.4 UUF AT 84MHZ PORM 5PCT	EA	1
38	6	XADZZ		81349	JAN2N499A	TRANSISTOR	EA	1
38	7	PADZZ	5905-00-141-1183	81349	RCR07G101JS	RESISTOR,FIXED,COMP	EA	1
38	8	PADZZ	5905-00-133-0440	81349	RCR07G560JS	RESISTOR,FIXED,COMP	EA	1
38	9	PADZZ	5905-00-110-7620	81349	RCR07G102JS	RESISTOR,FIXED,COMP	EA	2
38	10	PADZZ	5905-00-120-9154	81349	RCR07G471JS	RESISTOR,FIXED,COMP	EA	1
38	11	PADZZ	5905-00-114-0711	81349	RCR07G472JS	RESISTOR,FIXED,COMP	EA	1
38	12	PADZZ	5905-00-111-4750	81349	RCR07G301JS	RESISTOR,FIXED,COMP	EA	1
38	13	PADZZ	5950-00-403-0568	80063	SM-C-413604	TRANSFORMER,RADIO F	EA	1
38	14	PADZZ		80063	SM-C-413608	TRANSFORMER ASSY,RF	EA	1
38	15	PADZZ	5970-00-989-8333	07047	A-10042	INSULATOR,DISK	EA	1
38	16	XADZZ		80063	SM-C-413600	CIRCUIT BD ASSY	EA	1
38	17	XDDZZ	5340-01-104-7017	80063	SM-B-447252	SPACER,SPECIAL	EA	1

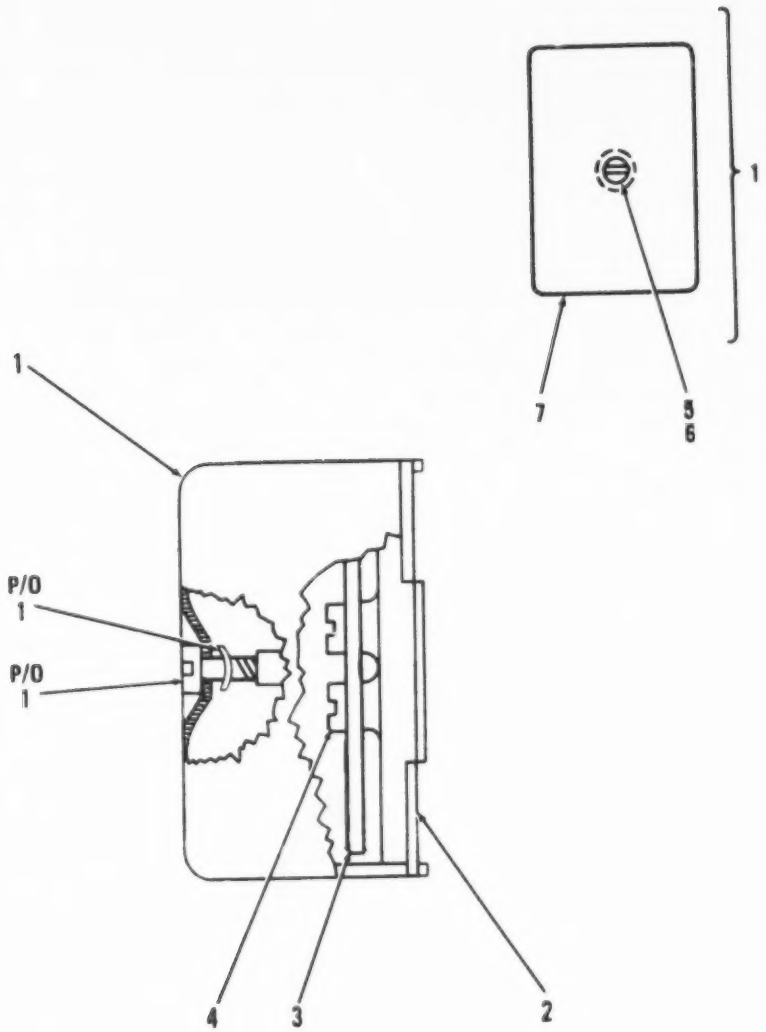

Figure 39. Second Mixer Assembly

(1) ILLUSTRATION (a) FIG NO	(1) ILLUSTRATION (b) ITEM NO	(2) SMR CODE	(3) NATIONAL STOCK NUMBER	(4) FSCM	(5) PART NUMBER	(6) DESCRIPTION / USABLE ON CODE	(7)	(8)
						GROUP 013203 SECOND MIXER ASSEMBLY		
						A3300 SM-B-413611		
39	1	XDDDL		80063	SM-B-413614	COVER ASSY.....	EA	1
39	2	XDDZZ		80063	SM-D-413613	BASE.....	EA	1
39	3	XDDDL		80063	SM-D-413617	MIXER STAGE ASSY.....	EA	1
39	4	PADZZ	5305-00-855-0962	96906	MS24629-3	SCREW,TAPPING,THREA.....	EA	2
39	5	PADZZ	5305-00-988-5747	83486	43-04-04120CD PL	SCREW,ASSEMBLED wAS.....	EA	1
39	6	PADZZ		78553	C-18695SS-012	NUT,SHEET SPRING.....	EA	1
39	7	XDDZZ		80063	SM-C-413616	COVER.....	EA	1

LEGEND

REF DES	ITEM NO	REF DES	ITEM NO	REF DES	ITEM NO	REF DES	ITEM NO
C3302	1	C3307	4	R3301	8	R3306	11
C3303	2	C3308	1	R3302	8	T3301	12
C3304	1	C3309	5	R3303	9	T3302	13
C3305	3	J3301	6	R3304	10	T3303	14
C3306	1	Q3301	7	R3305	11		

PREFIX ALL REFERENCE DESIGNATIONS WITH A3000A3300

EL6JB230

Figure 40. Mixer Stage Assembly (Sheet 1 of 2).

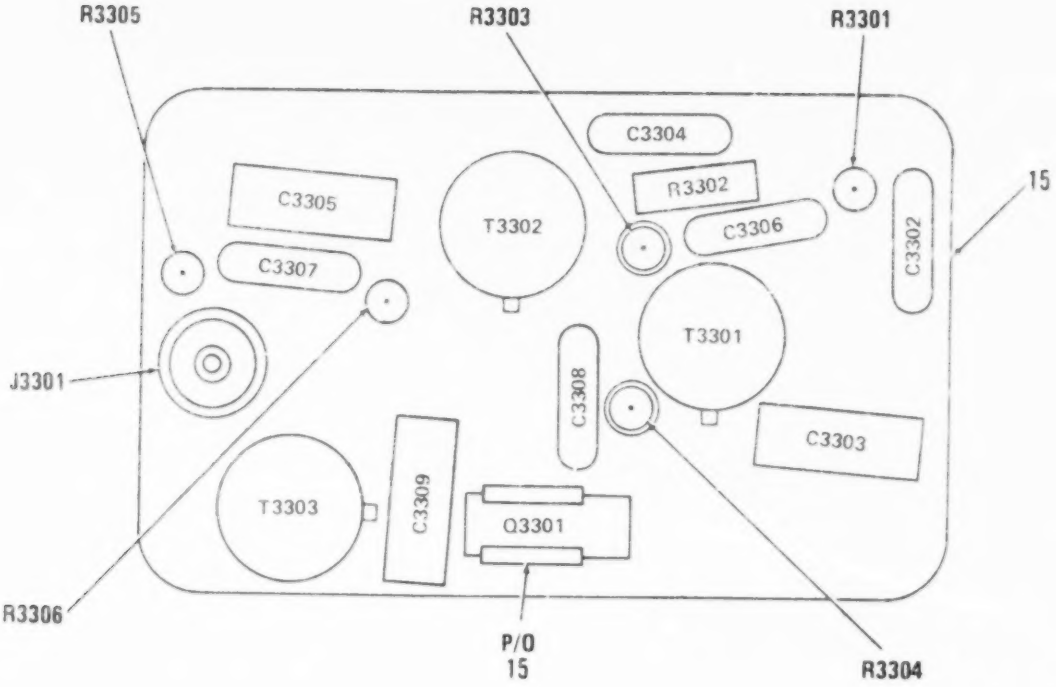

PREFIX ALL REFERENCE DESIGNATIONS WITH A3000A3300

EL6JB231

Figure 40. Mixer Stage Assembly (Sheet 2 of 2).

(1) ILLUSTRATION (a) FIG NO	(b) ITEM NO	(2) SMR CODE	(3) NATIONAL STOCK NUMBER	(4) FSCM	(5) PART NUMBER	(6) DESCRIPTION USABLE ON CODE		
						GROUP 01322301 MIXER STAGE ASSY		
40	1	XDDZZ		72982	855-511X5S0332M	CAPACITOR,CER DIEL .0033 UF,PORM 20 PCT,100 VDCW	EA	4
40	2	PADZZ	5910-00-726-8696	81349	CC22CH120G	CAPACITOR,FIXED,CER	EA	1
40	3	PADZZ	5910-00-681-7617	81349	CC22CK020C	CAPACITOR,FIXED,CER	EA	1
40	4	PADZZ	5910-00-892-3027	80063	SM-C-413567-1	CAPACITOR,FIXED,CER .001 UF,PORM 20 PCT,100 VDCW	EA	1
40	5	PADZZ	5910-00-853-6427	81349	CC22RH200G	CAPACITOR,FIXED,CER	EA	1
40	6	PADZZ		02660	27-3	CONNECTOR,RECEPTACLE 50 OHMS NOMINAL IMPEDANCE	EA	1
40	7	XADZZ		81349	JAN2N499A	TRANSISTOR	EA	1
40	8	PADZZ	5905-00-120-9154	81349	RCR07G471JS	RESISTOR,FIXED,COMP	EA	2
40	9	PADZZ	5905-00-114-0711	81349	RCR07G472JS	RESISTOR,FIXED,COMP	EA	1
40	10	PADZZ	5905-00-141-1183	81349	RCR07G101JS	RESISTOR,FIXED,COMP	EA	1
40	11	PADZZ	5905-00-135-6045	81349	RCR07G330JS	RESISTOR,FIXED,COMP	EA	2
40	12	PADZZ	5950-01-011-3417	80063	SM-D-413623	TRANSFORMER,RADIO F	EA	1
40	13	PADZZ	5950-00-403-0563	80063	SM-D-413625	TRANSFORMER,RADIO F	EA	1
40	14	XDDZZ		80063	SM-D-413627	TRANSFORMER ASSY,RF	EA	1
40	15	XADZZ		80063	SM-D-413620	CIRCUIT BD ASSY	EA	1
40	16	XDDZZ	5340-01-104-7017	80063	SM-B-447252	SPACER,SPECIAL	EA	2

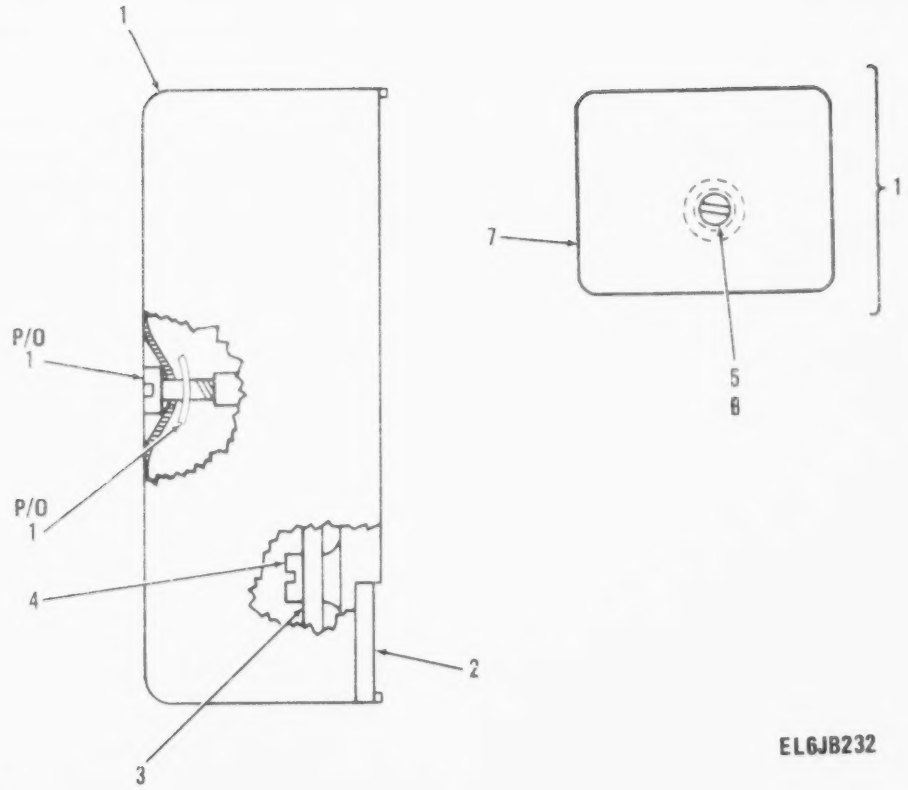

Figure 41. Intermediate Frequency Assembly, 1 and 2

(1) ILLUSTRATION (a) FIG NO	(1) ILLUSTRATION (b) ITEM NO	(2) SMR CODE	(3) NATIONAL STOCK NUMBER	(4) FSCM	(5) PART NUMBER	(6) DESCRIPTION / USABLE ON CODE	(7) U/M	(8) QTY INC IN UNIT
						GROUP 010204 1ST AND 2ND IF AMPLIFIER		
						ASSY A3400 SM-B-413634		
						(SAME AS GROUP 010201)		
41	1	XDDDL		80063	SM-B-413637	COVER ASSY	EA	1
41	2	XDDZZ		80063	SM-D-413636	BASE	EA	1
41	3	XDDDL		80063	SM-D-413640	IF AMPL ASSY	EA	1
41	4	PADZZ	5305-00-855-0962	96906	MS24629-3	SCREW,TAPPING,THREA	EA	2
41	5	PADZZ	5305-00-988-5747	83486	43-04-04120CD PL	SCREW,ASSEMBLED WAS	EA	1
41	6	PADZZ		78553	C-18695SS-012	NUT,SHEET SPRING	EA	1
41	7	XDDZZ		80063	SM-C-413639	COVER	EA	1

LEGEND

REF DES	ITEM NO	REF DES	ITEM NO	REF DES	ITEM NO	REF DES	ITEM NO
C3401	1	C3407	1	R3403	8	R3408	6
C3402	2	C3408	4	R3404	9	R3409	6
C3403	1	Q3401	5	R3405	10	R3410	6
C3404	3	Q3402	5	R3406	11	T3401	12
C3405	1	R3401	6	R3407	6	T3402	13
C3406	1	R3402	7				

PREFIX ALL REFERENCE DESIGNATIONS WITH A3000A3400

EL6JB233

Figure 42. Intermediate Frequency Amplifier Assembly (Sheet 1 of 2).

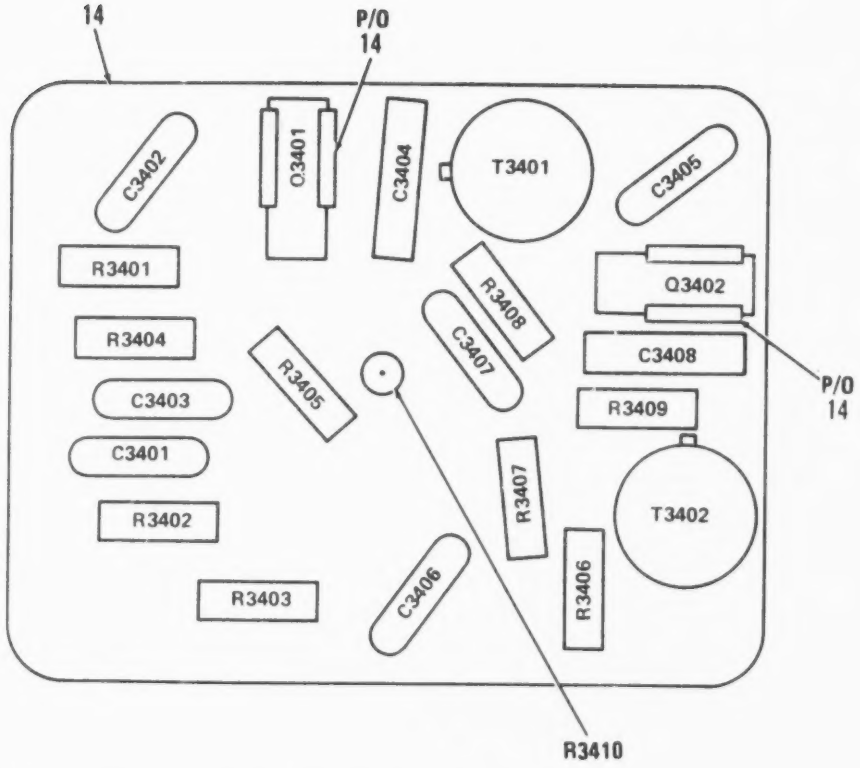

PREFIX ALL REFERENCE DESIGNATIONS WITH A3000A3400

EL6JB234

Figure 42. Intermediate Frequency Amplifier Assembly (Sheet 2 of 2).

(1) ILLUSTRATION (a) FIG NO	(1) ILLUSTRATION (b) ITEM NO	(2) SMR CODE	(3) NATIONAL STOCK NUMBER	(4) FSCM	(5) PART NUMBER	(6) DESCRIPTION / USABLE ON CODE	(7) U/M	(8) QTY INC IN UNIT
						GROUP 01020401 INTERMEDIATE FREQ AMP ASSY		
42	1	PADZZ	5910-00-857-5305	18796	855-222X550-103M	CAPACITOR,FIXED,CER	EA	5
42	2	PADZZ	5910-00-890-0554	80063	SM-C-413567-3	CAPACITOR,FIXED,CER	EA	1
42	3	PADZZ	5910-00-853-8757	81349	CC22UJ060C	CAPACITOR,FIXED,CER	EA	1
42	4	PADZZ	5910-00-823-1339	81349	CC22UJ150G	CAPACITOR,FIXED,CER	EA	1
42	5	XADZZ		81349	JAN2N699A	TRANSISTOR	EA	2
42	6	PADZZ	5905-00-141-0744	81349	RCR07G562JS	RESISTOR,FIXED,COMP	EA	5
42	7	PADZZ	5905-00-119-8768	81349	RCR07G821JS	RESISTOR,FIXED,COMP	EA	1
42	8	PADZZ	5905-00-120-9156	81349	RCR07G471JS	RESISTOR,FIXED,COMP	EA	1
42	9	PADZZ	5905-00-104-8358	81349	RCR07G822JS	RESISTOR,FIXED,COMP	EA	1
42	10	PADZZ	5905-00-114-5343	81349	RCR07G182JS	RESISTOR,FIXED,COMP	EA	1
42	11	PADZZ	5905-00-126-6683	81349	RCR07G332JS	RESISTOR,FIXED,COMP	EA	1
42	12	PADZZ	5950-01-011-4802	80063	SM-D-413645	TRANSFORMER,RADIO F	EA	1
42	13	PADZZ	5950-01-012-1367	80063	SM-D-413647	TRANSFORMER,RADIO F	EA	1
42	14	XADZZ		80063	SM-C-413642	CIRCUIT BD ASSY	EA	1

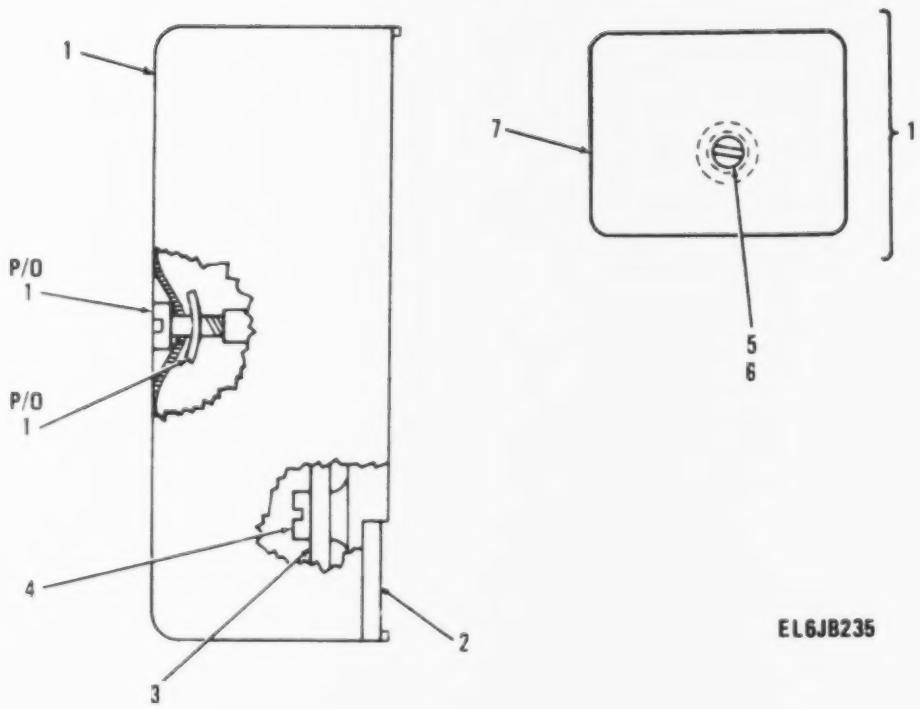

Figure 43. 3rd. Intermediate Frequency and Limiter Assembly.

(1) ILLUSTRATION (a) FIG NO	(b) ITEM NO	(2) SMR CODE	(3) NATIONAL STOCK NUMBER	(4) FSCM	(5) PART NUMBER	(6) DESCRIPTION USABLE ON CODE		
						GROUP 010205 3RD IF AND LIMITER ASSY		
						A3500 SM-B-413650		
						(SAME AS GROUP 010201)		
43	1	XDDDL		80063	SM-B-413653	COVER ASSY	EA	
43	2	XDDZZ		80063	SM-D-413652	BASE	EA	
43	3	XDDDL		80063	SM-D-413656	AMPL LMTR ASSY	EA	1
43	4	PADZZ	5305-00-855-0962	96906	MS24629-3	SCREW,TAPPING,THREA	EA	[illegible]
43	5	PADZZ	5305-00-988-5747	83486	43-04-04120CD PL	SCREW,ASSEMBLED WAS	EA	[illegible]
43	6	PADZZ		78553	C-18695SS-012	NUT,SHEET SPRING	EA	1
43	7	XDDZZ		80063	SM-C-413655	COVER	EA	1

LEGEND

REF DES	ITEM NO	REF DES	ITEM NO	REF DES	ITEM NO	REF DES	ITEM NO
C3501	1	C3507	2	R3501	9	R3507	11
C3502	2	C3508	2	R3502	10	R3508	12
C3503	2	C3509	5	R3503	11	T3501	14
C3504	2	L3501	6	R3504	12	T3502	15
C3505	3	Q3501	7	R3505	13	T3503	16
C3506	4	Q3502	8	R3506	10		

PREFIX ALL REFERENCE DESIGNATIONS WITH A3000A3500

EL6JB236

Figure 44. Amplifier-Limiter Assembly (Sheet 1 of 2).

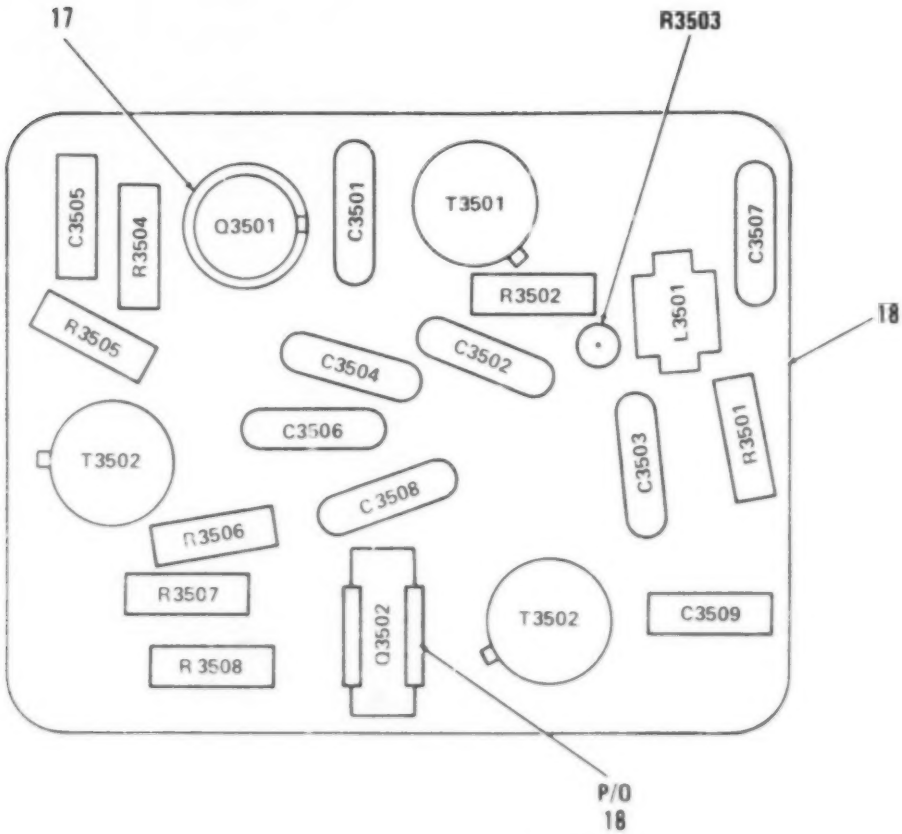

PREFIX ALL REFERENCE DESIGNATIONS WITH A3000A3500

EL6JB237

Figure 44. Amplifier-Limiter Assembly (Sheet 2 of 2).

(1) ILLUSTRATION (a) FIG NO	(1) ILLUSTRATION (b) ITEM NO	(2) SMR CODE	(3) NATIONAL STOCK NUMBER	(4) FSCM	(5) PART NUMBER	(6) DESCRIPTION USABLE ON CODE		
						GROUP 0102J501 AMPLIFIER-LIMITER Assy		
44	1	XDDZZ		72136	CM05FC251GN3	CAPACITOR,MICA DIEL	EA	1
44	2	PADZZ	5910-00-857-5305	18796	855-222X5S0-103M	CAPACITOR,FIXED,CER .01 UF,PERM 20 PCT,100 VOLW	EA	5
44	3	XDDZZ		81349	CC20UJ080G	CAPACITOR,CER DIEL	EA	1
44	4	XDDZZ		72136	CM06FC431JN3	CAPACITOR,MICA DIEL	EA	1
44	5	PADZZ	5910-00-853-9696	81349	CC22UJ240G	CAPACITOR,FIXED,CER	EA	1
44	6	PADZZ	5950-00-891-9158	80063	SM-C-413577	COIL,RADIO,FREQUEN 1 MILLIH INDUCTANCE PERM 10 PCT	EA	1
44	7	PADZZ	5961-00-925-3777	81349	JAN2N2907A	TRANSISTOR	EA	1
44	8	XADZZ		81349	JAN2N499A	TRANSISTOR	EA	1
44	9	PADZZ	5905-00-110-7620	81349	RCR07G102JS	RESISTOR,FIXED,COMP	EA	1
44	10	PADZZ	5905-00-114-5343	81349	RCR07G182JS	RESISTOR,FIXED,COMP	EA	2
44	11	PADZZ	5905-00-141-0744	81349	RCR07G562JS	RESISTOR,FIXED,COMP	EA	4
44	12	PADZZ	5905-00-105-7764	81349	RCR07G222JS	RESISTOR,FIXED,COMP	EA	2
44	13	PADZZ	5905-00-111-4727	81349	RCR07G272JS	RESISTOR,FIXED,COMP	EA	1
44	14	PAFZZ	5950-01-011-3189	80063	SM-D-413663	TRANSFORMER,RADIO F	EA	1
44	15	PADZZ	5950-01-011-3190	80063	SM-D-413665	TRANSFORMER,RADIO F	EA	1
44	16	PADZZ	5950-01-011-3191	80063	SM-D-413667	TRANSFORMER,RADIO F	EA	1
44	17	PADZZ	5970-00-989-8333	07047	A-10042	INSULATOR,DISK	EA	4
44	18	XADZZ		80063	SM-C-413658	CIRCUIT BD Assy	EA	1

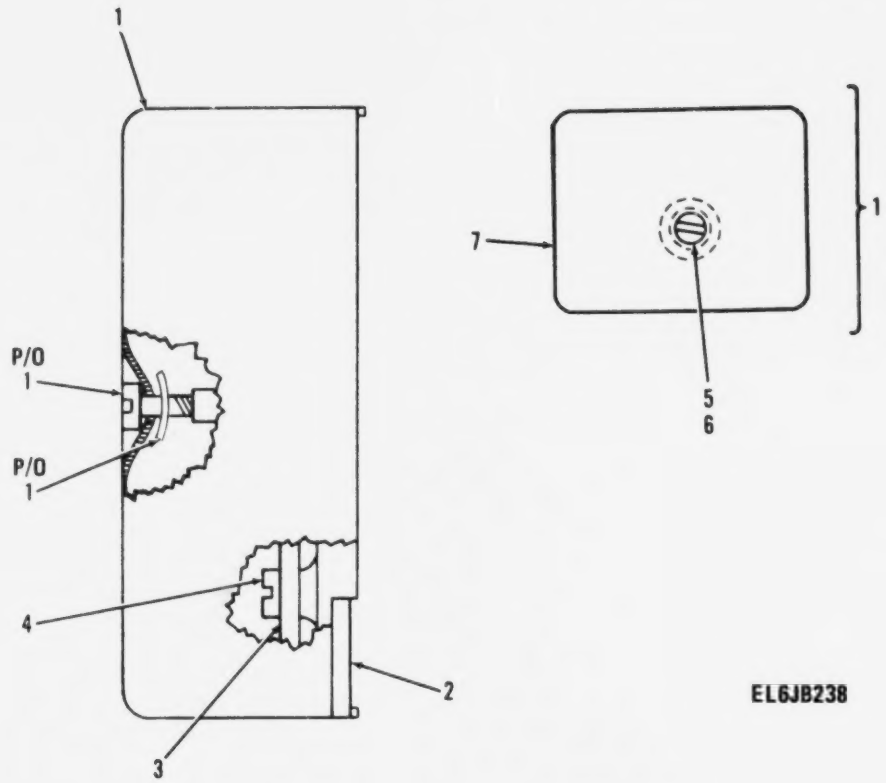

Figure 45. Hunt Frequency Discriminator Assembly.

best copy available

(1) ILLUSTRATION (a) FIG NO	(1) ILLUSTRATION (b) ITEM NO	(2) SMR CODE	(3) NATIONAL STOCK NUMBER	(4) FSCM	(5) PART NUMBER	(6) DESCRIPTION / USABLE ON CODE	(7) U/M	(8) QTY INC IN UNIT
						GROUP 010206 HUNT FREQ DISCR ASSEMBLY		
						A3600 SM-B-413670		
45	1	XDDDL		80063	SM-B-413673	COVER ASSY	EA	1
45	2	XDDZZ		80063	SM-D-413672	BASE	EA	1
45	3	XDDDL		80063	SM-D-413676	FREQ CONT ASSY	EA	1
45	4	PADZZ	5305-00-855-0962	96906	MS24629-3	SCREW,TAPPING,THREA	EA	2
45	5	PADZZ	5305-00-988-5747	83486	43-04-04120CD PL	SCREW,ASSEMBLED WAS	EA	1
45	6	PADZZ		78553	C-18695SS-012	NUT,SHEET SPRING	EA	1
45	7	XDDZZ		80063	SM-C-413675	COVER	EA	1

LEGEND

REF DES	ITEM NO	REF DES	ITEM NO	REF DES	ITEM NO	REF DES	ITEM NO
CR3601	1	C3605	4	C3612	9	R3603	16
CR3602	2	C3606	5	L3601	10	R3604	17
CR3603	2	C3607	6	L3602	11	R3605	18
C3601	3	C3608	7	Q3601	12	R3606	18
C3602	4	C3609	8	RT3601	13	T3601	19
C3603	4	C3610	8	R3601	14	T3602	20
C3604	4	C3611	9	R3602	15	T3603	21

PREFIX ALL REFERENCE DESIGNATIONS WITH A3000A3600

EL6JB239

Figure 46. Frequency Control Assembly (Sheet 1 of 2).

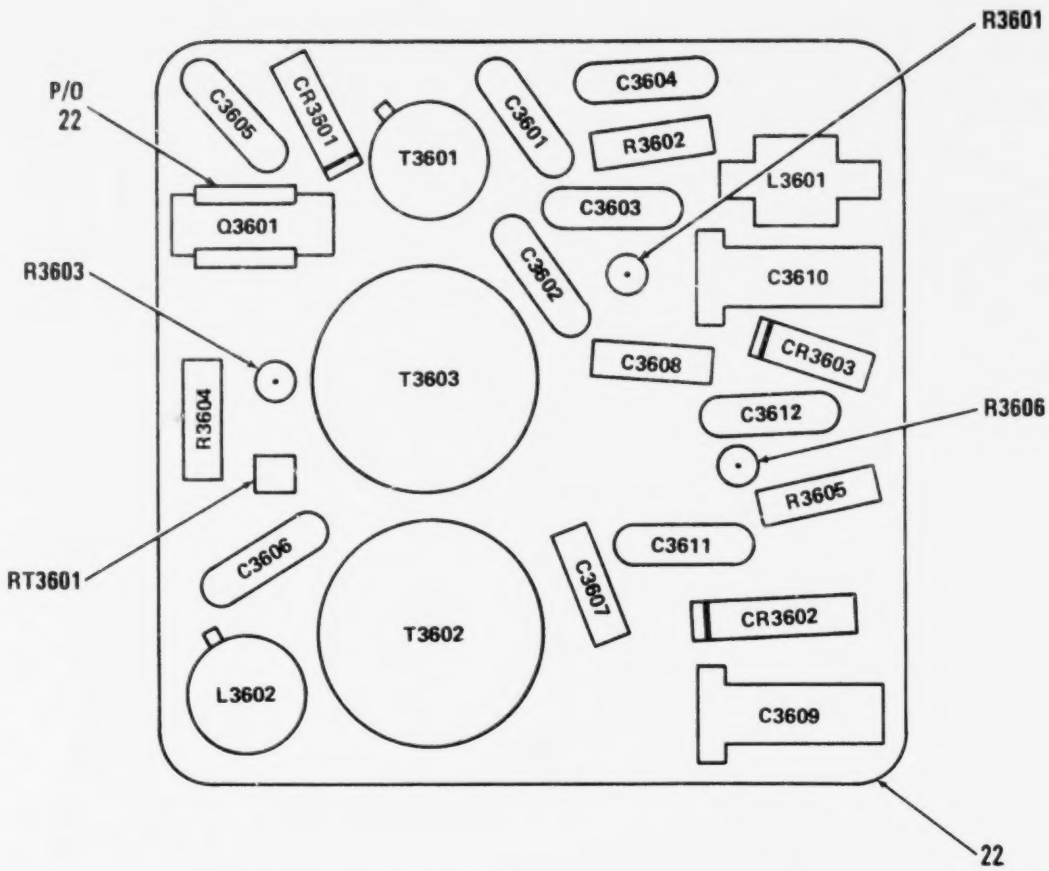

Figure 46. Frequency Control Assembly (Sheet 2 of 2).

(1) ILLUSTRATION (a) FIG NO	(1) ILLUSTRATION (b) ITEM NO	(2) SMR CODE	(3) NATIONAL STOCK NUMBER	(4) FSCM	(5) PART NUMBER	(6) DESCRIPTION / USABLE ON CODE	(7) U/M	(8) QTY INC IN UNIT
						GROUP 0102601 FREQUENCY CONTROL ASSY		
46	1	PADZZ	5961-00-833-3043	81349	JANIN757A	SEMICONDUCTOR DEVIC	EA	1
46	2	PADZZ	5961-00-862-9864	81349	JANIN914	SEMICONDUCTOR DEVIC	EA	2
46	3	PADZZ	5910-00-163-7283	81349	CMR05F181F0DM	CAPACITOR,FIXED,MIC	EA	1
46	4	PADZZ	5910-00-857-5305	18796	855-222X5S0-103M	CAPACITOR,FIXED,CER .01 UF,PORM 20 PCT,100 VDCW	EA	4
46	5	XDDZZ		81349	CMR05F151F0DM	CAPACITOR,MICA DIEL	EA	1
46	6	PADZZ	5910-00-938-7532	81349	CC30PH470F	CAPACITOR,FIXED,CER	EA	1
46	7	PADZZ	5910-00-938-7531	81349	CC30LH470F	CAPACITOR,FIXED,CER	EA	1
46	8	PADZZ	5910-00-992-3306	81349	PC51J110	CAPACITOR,VARIABLE	EA	2
46	9	PADZZ	5910-00-892-3027	80063	SM-C-413567-1	CAPACITOR,FIXED,CER .001 UF,PORM 20 PCT,100 VDCW	EA	2
46	10	PADZZ	5950-00-891-9158	80063	SM-C-413577	COIL,RADIO,FREQUEN 1 MILLIH INDUCTANCE PORM 10 PCT	EA	1
46	11	PADZZ	5950-01-011-4809	80063	SM-D-413692	COIL,RADIO FREQUENC 5.37 UH PORM 10 PCT AT 7.9 MHZ PORM .02 PCT	EA	1
46	12	XADZZ		81349	JAN2N499A	TRANSISTOR	EA	1
46	13	XDDZZ		50056	32TD57	RESISTOR,THERMAL 2000 OHMS PORM 10 PCT AT 25 DEGREE CENTIGRADE	EA	1
46	14	PADZZ	5905-00-105-7764	81349	RCR07G222JS	RESISTOR,FIXED,COMP	EA	1
46	15	PADZZ	5905-00-110-7622	81349	RCR07G682JS	RESISTOR,FIXED,COMP	EA	1
46	16	PADZZ	5905-00-141-0742	81349	RCR07G181JS	RESISTOR,FIXED,COMP	EA	1
46	17	PADZZ	5905-00-114-0710	81349	RCR07G331JS	RESISTOR,FIXED,COMP	EA	1
46	18	PADZZ	5905-00-106-1357	81349	RCR07G563JS	RESISTOR,FIXED,COMP	EA	2
46	19	PADZZ	5950-01-012-6300	80063	SM-D-413690	TRANSFORMER,RADIO F	EA	1
46	20	XDDZZ		80063	SM-C-413694	TRANSFORMER ASSY,RF 14.6 MILLIH MIN INDUCTANCE AT 2.5 MHZ PORM 125 HZ	EA	1
46	21	XDDZZ		80063	SM-C-413681	TRANSFORMER ASSY,RF 11.8 MILLIH MIN INDUCTANCE AT 2.5 MHZ PORM 125 HZ	EA	1
46	22	XADZZ		80063	SM-D-413678	CIRCUIT BD ASSY	EA	1

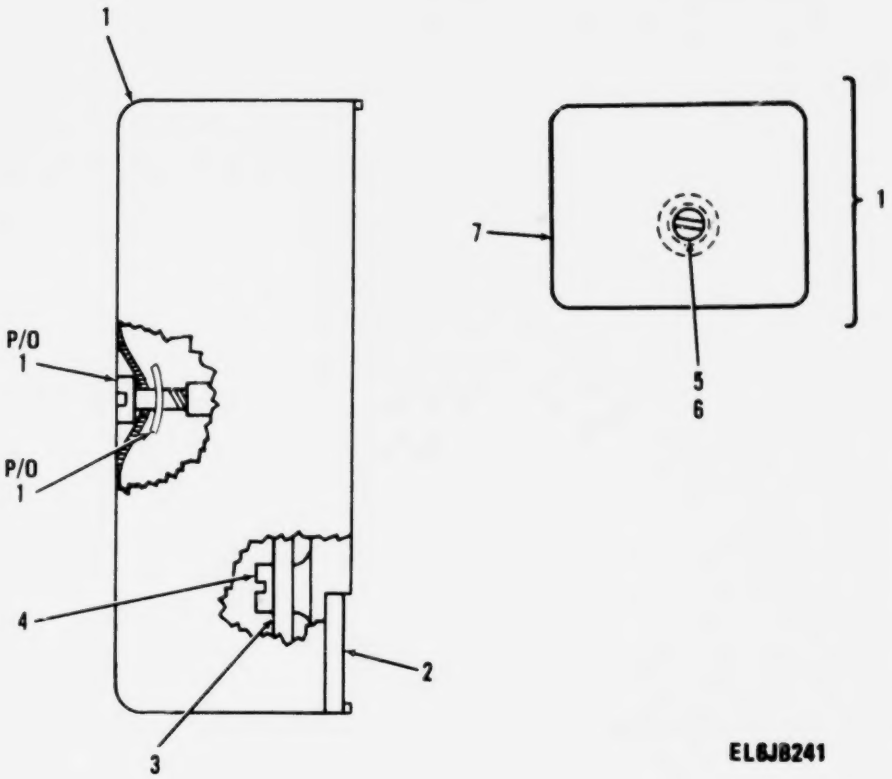

Figure 47. Phase Discriminator Assembly

(1) ILLUSTRATION (a) FIG NO	(1) ILLUSTRATION (b) ITEM NO	(2) SMR CODE	(3) NATIONAL STOCK NUMBER	(4) FSCM	(5) PART NUMBER	(6) DESCRIPTION USABLE ON CODE	(7) U/M	(8) QTY INC IN UNIT
						GROUP 010207 PHASE DISC ASSEMBLY		
						A3700 SM-B-413699		
47	1	XDDDL		80063	SM-B-413702	COVER ASSY	EA	1
47	2	XDDZZ		80063	SM-D-413701	BASE	EA	1
47	3	XDDDL		80063	SM-D-413705	FREQ CONTROL ASSY	EA	1
47	4	PADZZ	5305-00-855-0962	96906	MS24629-3	SCREW,TAPPING,THREA	EA	2
47	5	PADZZ	5305-00-988-5747	83486	43-04-04120CD PL	SCREW,ASSEMBLED WAS	EA	1
47	6	PADZZ		78553	C-18695SS-012	NUT,SHEET SPRING	EA	1
47	7	XDDZZ		80063	SM-C-413704	COVER	EA	1

LEGEND

REF DES	ITEM NO	REF DES	ITEM NO	REF DES	ITEM NO	REF DES	ITEM NO
CR3701	1	C3709	8	R3702	13	R3712	20
CR3702	1	C3710	8	R3703	14	R3713	21
CR3703	1	C3712	8	R3704	14	R3714	22
C3701	2	C3713	8	R3705	15	R3715	21
C3702	2	C3714	8	R3706	16	R3716	22
C3703	3	J3701	9	R3707	17	R3717	23
C3704	4	L3701	10	R3708	18	R3718	24
C3705	5	Q3701	11	R3709	19	R3719	25
C3706	6	Q3702	11	R3710	20	T3701	26
C3707	7	R3701	12	R3711	19	T3702	27
C3708	7						

PREFIX ALL REFERENCE DESIGNATIONS WITH A3000A3700

EL6JB242

Figure 48. Frequency Control Assembly (Sheet 1 of 2).

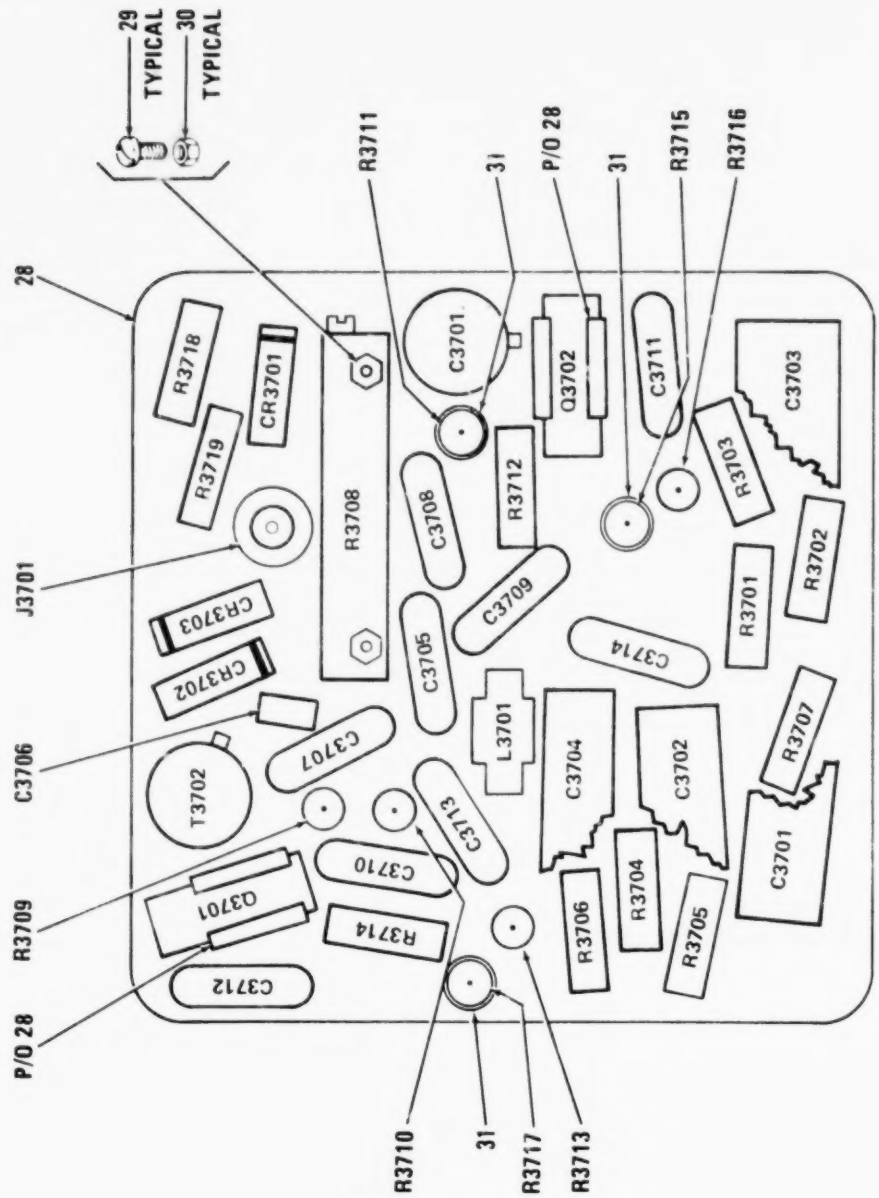

Figure 48. Frequency Control Assembly (Sheet 2 of 2).

(1) ILLUSTRATION (a) FIG NO	(1) ILLUSTRATION (b) ITEM NO	(2) SMR CODE	(3) NATIONAL STOCK NUMBER	(4) FSCM	(5) PART NUMBER	(6) DESCRIPTION / USABLE ON CODE	(7) U/M	(8) QTY INC IN UNIT
						GROUP 01320701 FREQUENCY CONTROL ASSY		
48	1	PADZZ	5961-00-842-9864	81349	JANIN914	SEMICONDUCTOR DEVIC	EA	3
48	2	PADZZ	5910-00-018-8913	99515	EP-60-3	CAPACITOR,FIXED,PLA 0.2 UF,PORM 20 PCT,50 VDCW	EA	2
48	3	PADZZ	5910-00-012-5547	99515	EP-60-6	CAPACITOR,FIXED,PLA 0.4 UF,PORM 20 PCT,50 VDCW	EA	1
48	4	PADZZ	5910-00-967-5702	99515	HE1-104E	CAPACITOR,FIXED,PLA 0.1 UF,PORM 20 PCT,50 VDCW	EA	1
48	5	PADZZ	5910-01-044-8563	81349	CMR05F221GODR	CAPACITOR,FIXED,MIC	EA	1
48	6	XDDZZ	5910-00-010-8686	81349	M39014/01-1357	CAPACITOR,FIXED,CER	EA	1
48	7	PADZZ	5910-01-030-1770	81349	CMR05F151GODR	CAPACITOR,FIXED,MIC	EA	2
48	8	PADZZ	5910-00-857-5305	18796	855-222X5S0-103M	CAPACITOR,FIXED,CER .01 UF,PORM 20 PCT,100 VDCW	EA	6
48	9	PADZZ		02660	27-3	CONNECTOR,RECEPTAC 50 OHMS NOMINAL IMPEDANCE	EA	1
48	10	PADZZ	5950-00-891-9158	80063	SM-C-413577	COIL,RADIO,FREQUEN 1 MILLIH INDUCTANCE PORM 10 PCT	EA	1
48	11	XADZZ		81349	JAN2N499A	TRANSISTOR	EA	2
48	12	PADZZ	5905-00-400-4528	81349	RCR07G124JS	RESISTOR,FIXED,COMP	EA	1
48	13	PADZZ	5905-00-141-0717	81349	RCR07G473JS	RESISTOR,FIXED,COMP	EA	1
48	14	PADZZ	5905-00-106-1357	81349	RCR07G563JS	RESISTOR,FIXED,COMP	EA	2
48	15	PADZZ	5905-00-485-4545	81349	RCR07G334JS	RESISTOR,FIXED,COMP	EA	1
48	16	PADZZ	5905-00-115-3560	81349	RCR07G183JS	RESISTOR,FIXED,COMP	EA	1
48	17	PADZZ	5905-00-135-3974	81349	RCR07G431JS	RESISTOR,FIXED,COMP	EA	1
48	18	PADZZ	5905-00-682-4264	32997	220W-1-502	RESISTOR,VARIABLE,W 5000 OHMS,PLUS 10 PCT,MAX RESISTANCE	EA	1
48	19	PADZZ	5905-00-104-8362	81349	RCR07G132JS	RESISTOR,FIXED,COMP	EA	2
48	20	PADZZ	5905-00-126-6683	81349	RCR07G332JS	RESISTOR,FIXED,COMP	EA	2
48	21	PADZZ	5905-00-114-0711	81349	RCR07G472JS	RESISTOR,FIXED,COMP	EA	2
48	22	PADZZ	5905-00-114-5343	81349	RCR07G182JS	RESISTOR,FIXED,COMP	EA	2
48	23	PADZZ	5905-00-141-1183	81349	RCR07G101JS	RESISTOR,FIXED,COMP	EA	1
48	24	PADZZ	5905-00-104-8368	81349	RCR07G470JS	RESISTOR,FIXED,WIRE	EA	1
48	25	PADZZ	5905-00-141-0742	81349	RCR07G181JS	RESISTOR,FIXED,COMP	EA	1
48	26	PADZZ	5950-01-011-3192	80063	SM-D-413712	TRANSFORMER,RADIO F	EA	1
48	27	PADZZ	5950-01-011-4799	80063	SM-D-413714	TRANSFORMER,RADIO F	EA	1
48	28	XADZZ		80063	SM-D-413709	CIRCUIT BD ASSY	EA	1
48	29	PADZZ	5305-00-989-0682	96906	MS35206-205	SCREW,MACHINE	EA	2
48	30	PADZZ	5310-01-100-6991	30655	F92-1660-26	NUT,SELF-LOCKING,HE	EA	2
48	31	XDDZZ	5340-01-104-7017	80063	SM-B-447252	SPACER,SPECIAL	EA	3

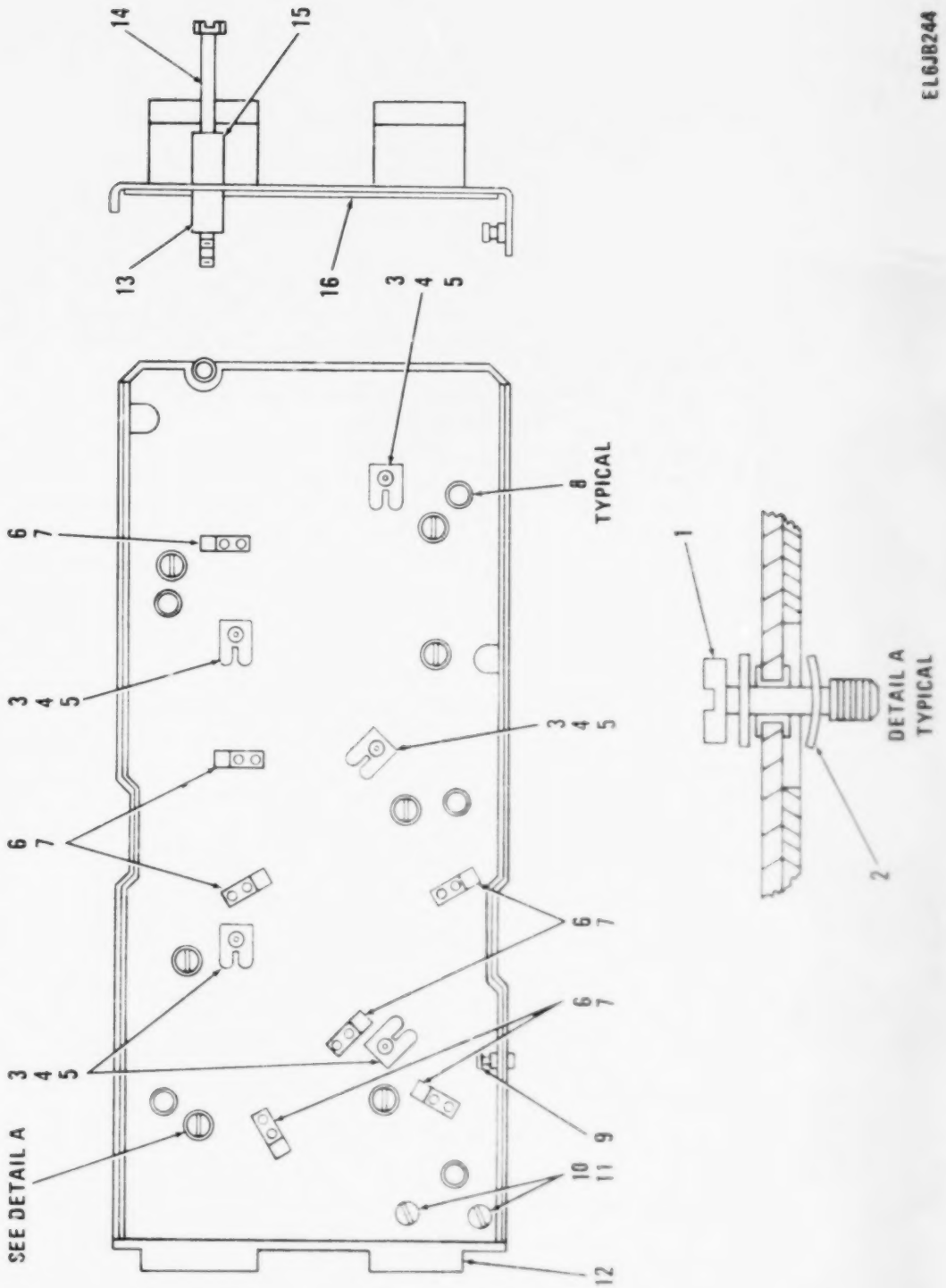

Figure 49. Chassis Assembly, Electrical (Sheet 1 of 2).

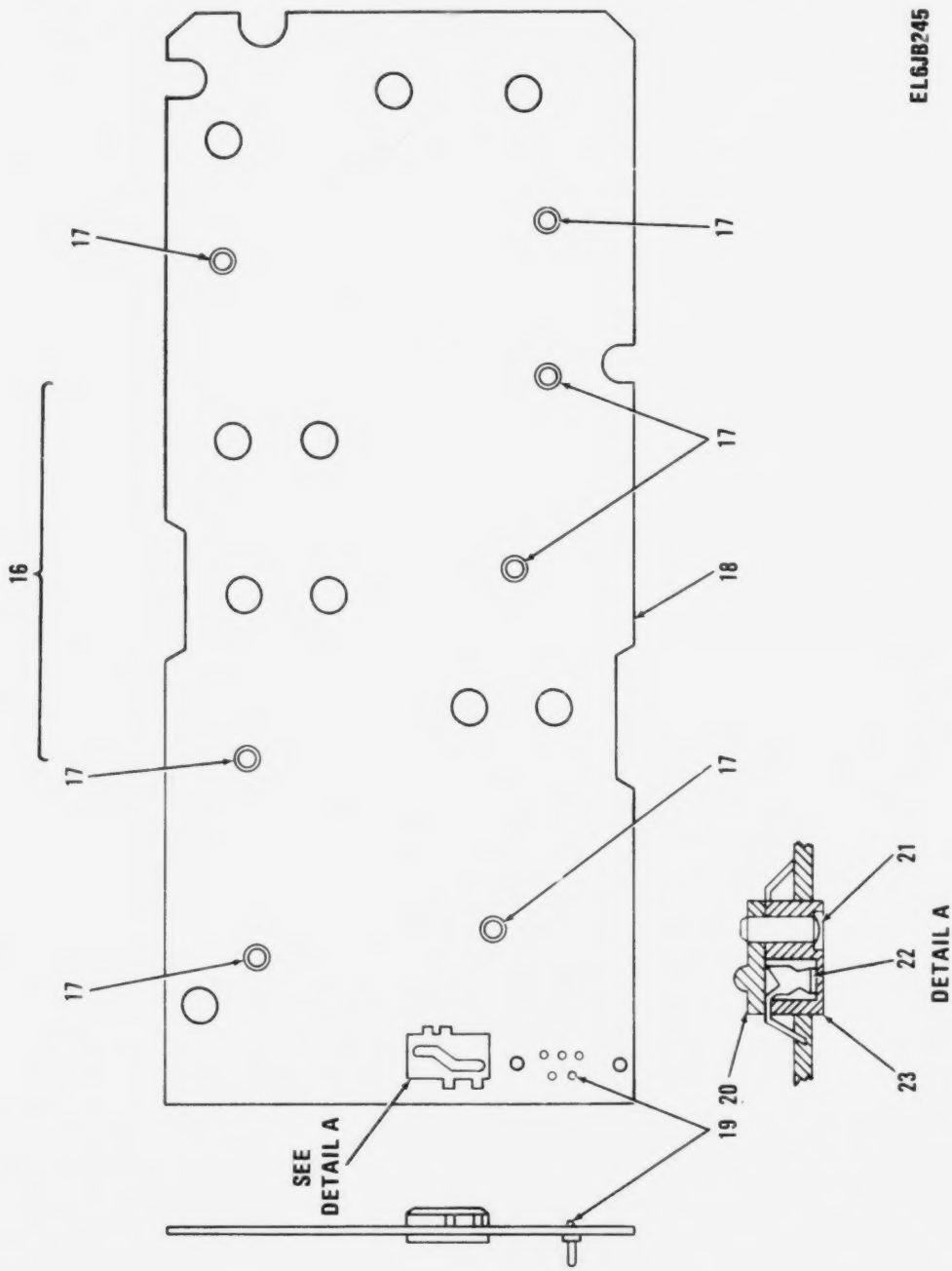

Figure 49. Chassis Assembly, Electrical (Sheet 2 of 2).

(1) ILLUSTRATION (a) FIG NO	(1) ILLUSTRATION (b) ITEM NO	(2) SMR CODE	(3) NATIONAL STOCK NUMBER	(4) FSCM	(5) PART NUMBER	(6) DESCRIPTION / USABLE ON CODE	(7) U/M	(8) QTY INC IN UNIT
						GROUP 010208 CHASSIS ASSEMBLY,ELECTRI-		
						CAL AI SM-D-413528		
49	1	PAFZZ	5305-00-988-5747	83486	43-06-04120CD PL	SCREW,ASSEMBLED WAS	EA	7
49	2	PAFZZ		78553	C-18695SS-012	NUT,SHEET SPRING	EA	7
49	3	XDDZZ		80063	SM-B-413540	CONTACT	EA	5
49	4	PADZZ	5310-00-167-0830	88044	AN960-3L	WASHER,FLAT	EA	5
49	5	XDDZZ		80063	SM-B-413541	RIVET	EA	5
49	6	XDDZZ		80063	SM-B-413539	CLIP,SPR INSN	EA	7
49	7	XDDZZ		08544	SE25CD PL	EYELET,MTLC	EA	14
49	8	XDDZZ		80063	SM-B-413535	STUD	EA	5
49	9	XDDZZ		80063	SM-B-413538	PIN,SHLDR HD	EA	1
49	10	PAFZZ	5305-00-849-9046	80063	SM-C-413531-11	SCREW,EXTERNALLY RE	EA	2
49	11	PAFZZ	5310-00-045-4007	96906	MS35338-41	WASHER,LOCK	EA	2
49	12	XAFZZ		80063	SM-E-413534	CHASSIS	EA	1
49	13	XDDZZ		80063	SM-B-413537-1	SPACER	EA	1
49	14	PAFZZ	5305-00-230-2121	80063	SM-B-413532-3	SCREW,EXTERNALLY RE	EA	1
49	15	XDDZZ		80063	SM-C-413536-5	SPACER	EA	1
49	16	XDDDD		80063	SM-D-413543	CIRCUIT BD ASSY	EA	1
49	17	XDDZZ		08544	SE54SL PL	EYELET,MTLC	EA	7
49	18	XADZZ		80063	SM-E-413545	PRINTED CIRCUIT BD	EA	1
49	19	XDDZZ		80063	SM-B-413546-1	CONTACT	EA	31
49	20	PAFZZ	5935-00-859-2638	80063	SM-C-413549	BASE,SOCKET	EA	1
49	21	PADZZ	5320-00-054-5038	96906	MS16535-27	RIVET,TUBULAR	EA	2
49	22	PADZZ	5999-00-858-6482	80063	SM-C-413550	CONTACT,ELECTRICAL	EA	4
49	23	XADZZ		80063	SM-D-413548	SOCKET BODY	EA	1

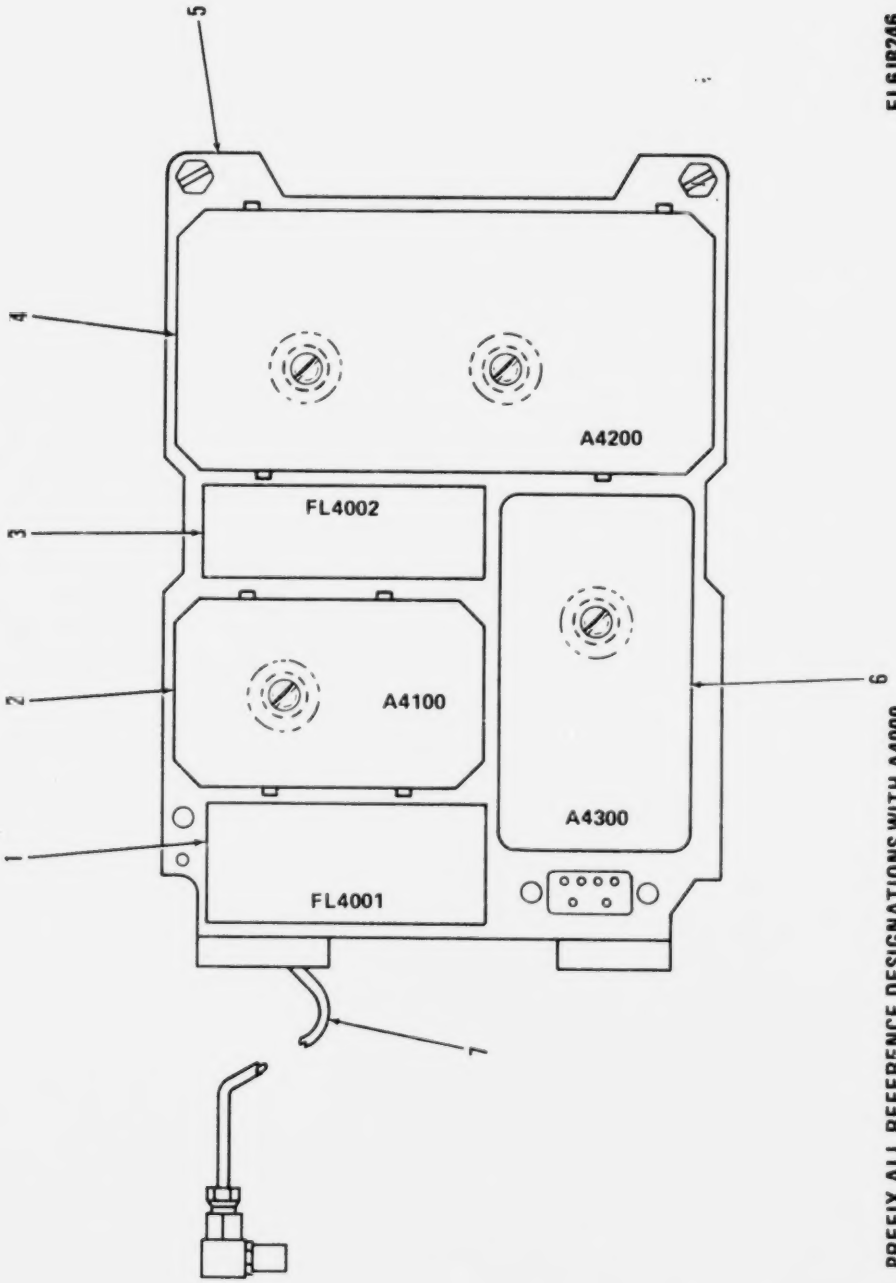

Figure 50. Amplifier Assembly, IF (Sheet 1 of 3).

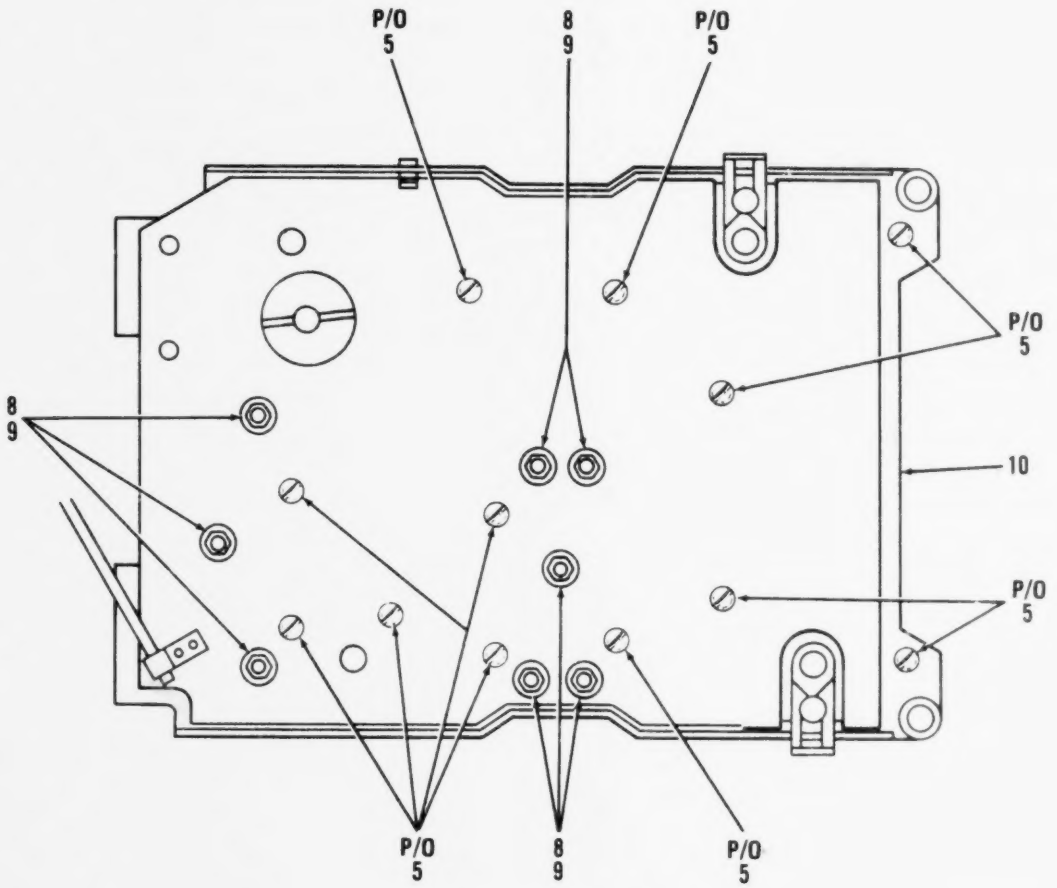

Figure 50. Amplifier Assembly, IF (Sheet 2 of 3).

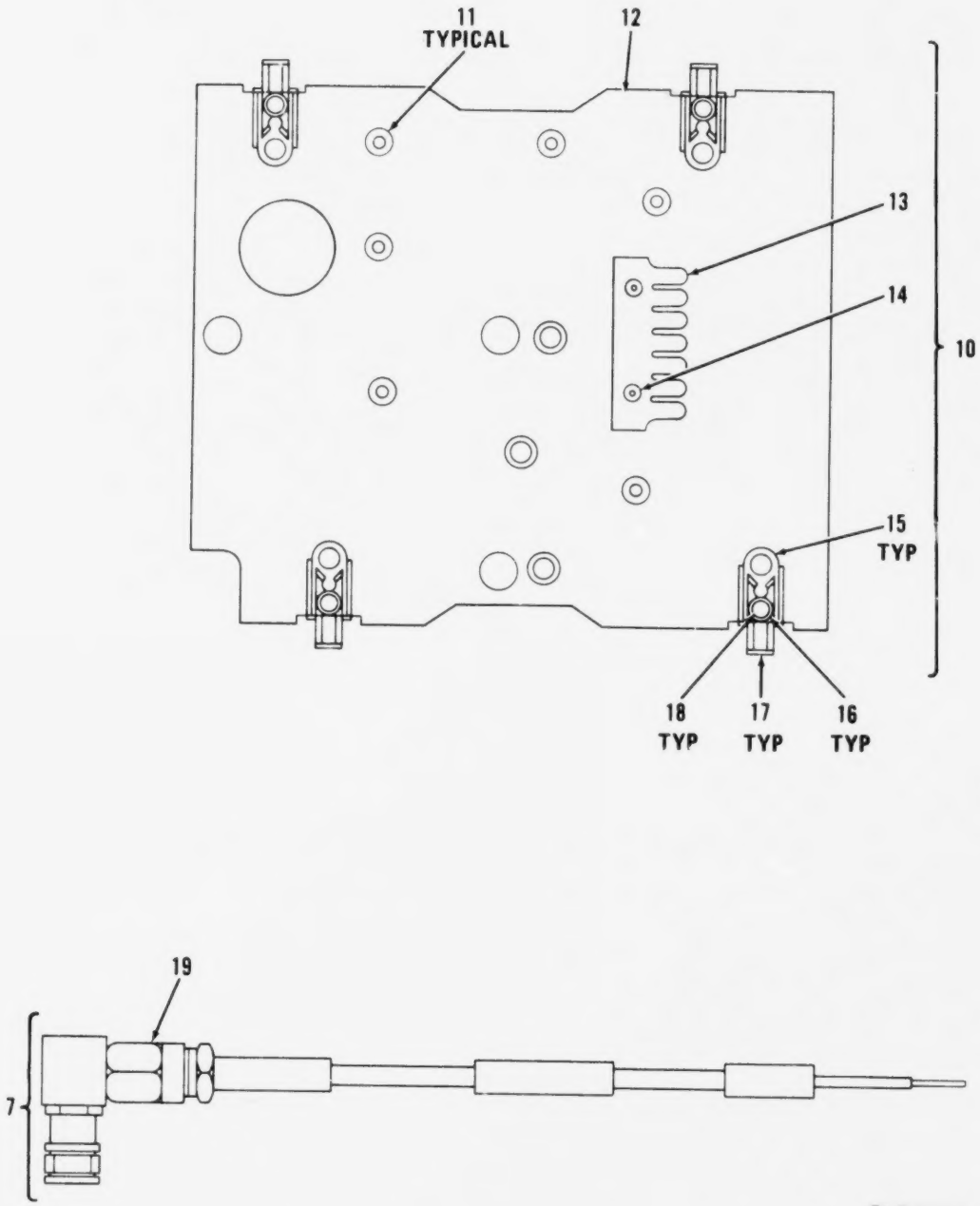

Figure 50. Amplifier Assembly, IF (Sheet 3 of 3).

(1) ILLUSTRATION (a) FIG NO	(1) ILLUSTRATION (b) ITEM NO	(2) SMR CODE	(3) NATIONAL STOCK NUMBER	(4) FSCM	(5) PART NUMBER	(6) DESCRIPTION / USABLE ON CODE	(7) U/M	(8) QTY INC IN UNIT
						GROUP 0103 AMPLIFIER ASSEMBLY,IF		
						A4000 AND A4000A		
50	1	PAFZZ	5915-00-849-3467	92208	819A-1	FILTER,BAND PASS 50 KHZ CHANNEL OPERATION	EA	1
50	2	PAFDL	5820-00-853-5963	80063	SM-C-413726	AMPLIFIER,INTERMEDI	EA	1
50	3	PAFZZ	5915-00-849-3466	92208	847A-1	FILTER,BAND PASS 50 KHZ CHANNEL OPERATION	EA	1
50	4	PAFDA	5820-01-092-8024	80063	SM-D-921300	DISCRIMINATOR-LIMIT	EA	1
50	5	PAFHH	5820-00-853-5884	80063	SM-D-413802	CHASSIS,ELECTRICAL	EA	1
50	6	PAFDL	5820-00-853-5961	80063	SM-B-413785	AMPLIFIER,AUDIO FRE	EA	1
50	7	PAFHA	5995-00-853-6375	80063	SM-D-413816-GR1	RECEIVER-TRANSMITTE	EA	1
50	8	PAFZZ	5310-00-582-9176	30655	F92-1660-40	NUT,SELF-LOCKING,HE	EA	5
50	9	PAFZZ	5310-00-193-7577	96906	MS35333-36	WASHER,LOCK	EA	5
50	10	PAFDA	5999-00-853-6756	80063	SM-C-413722	PLATE,ELECTRICAL SH	EA	1
50	11	PAFZZ	3120-00-897-6873	80063	SM-B-413554	BUSHING,SLEEVE	EA	6
50	12	XAFDA		80063	SM-D-413724	PLATE,SHIELD	EA	1
50	13	XDDZA		30817	SM-C-374812	CONTACT STRIP	EA	1
50	14	XDDZZ		08544	SE22SL PL	EYELET,MTLC	EA	2
50	15	XAFZZ		88447	38871-G-2	GUIDE	EA	4
50	16	XAFZZ		88447	38891-W	WASHER,SPR TNSN	EA	4
50	17	PAFZZ	5325-00-262-9130	88447	38881-L	LATCH,SNAPSLIDE FAS	EA	4
50	18	XAFZZ		88447	38901-R	RIVET,TUBULAR	EA	4
50	19	PAHZA	5935-00-762-0414	05009	51-311-3196	CONNECTOR,PLUG,ELEC FEMALE COAXIAL RIGHT ANGLE	EA	1

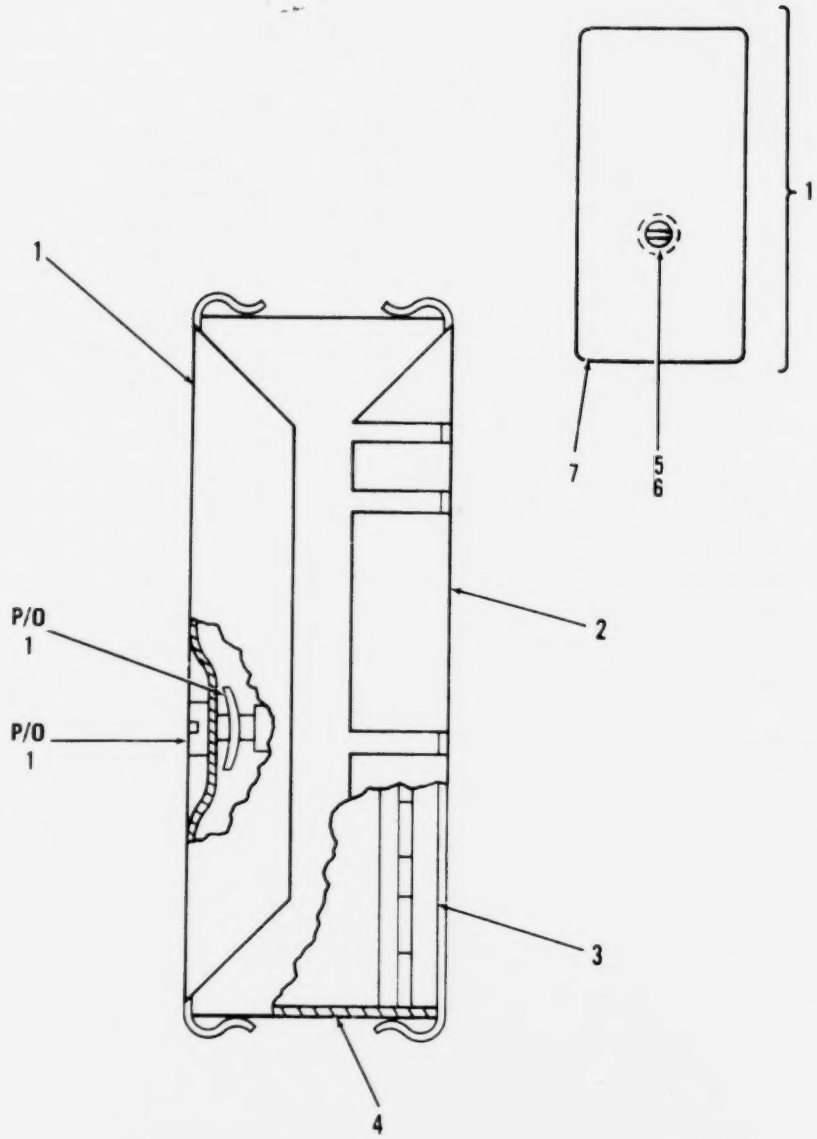

Figure 51. 1st. and 2nd. IF Amplifier

(1) ILLUSTRATION (a) FIG NO	(1) ILLUSTRATION (b) ITEM NO	(2) SMR CODE	(3) NATIONAL STOCK NUMBER	(4) FSCM	(5) PART NUMBER	(6) DESCRIPTION / USABLE ON CODE	(7) U M	(8) QTY INC IN UNIT
						GROUP 010301 1ST AND 2ND IF AMPLIFIER		
						ASSY A4100 SM-C-413726		
51	1	XDDDA		80063	SM-C-413730	COVER ASSY	EA	1
51	2	XDDZA		80063	SM-D-413729	COVER,BOTTOM	EA	1
51	3	XDDZZ		80063	SM-C-413728	BASE	EA	1
51	4	XDDDL		80063	SM-D-413733	AMPL ASSY,IF	EA	1
51	5	PADZZ	5305-00-988-5747	83486	43-04-04120CD PL	SCREW,ASSEMBLED WAS	EA	1
51	6	PADZZ		78553	C-18695SS-012	NUT,SHEET SPRING	EA	1
51	7	XDDZA		80063	SM-D-413732	COVER,TOP	EA	1

LEGEND

REF DES	ITEM NO	REF DES	ITEM NO	REF DES	ITEM NO	REF DES	ITEM NO
C4101	1	C4109	1	R4102	12	R4110	18
C4102	2	C4110	6	R4103	11	R4111	19
C4103	1	C4111	7	R4104	13	R4112	11
C4104	1	L4101	8	R4105	14	R4113	12
C4105	3	L4102	8	R4106	14	R4114	11
C4106	4	Q4101	9	R4107	15	T4101	20
C4107	1	Q4102	10	R4108	16	T4102	21
C4108	5	R4101	11	R4109	17	T4103	22

PREFIX ALL REFERENCE DESIGNATIONS WITH A4000A4100

EL6JS250

Figure 52. Amplifier, Intermediate Frequency (Sheet 1 of 2).

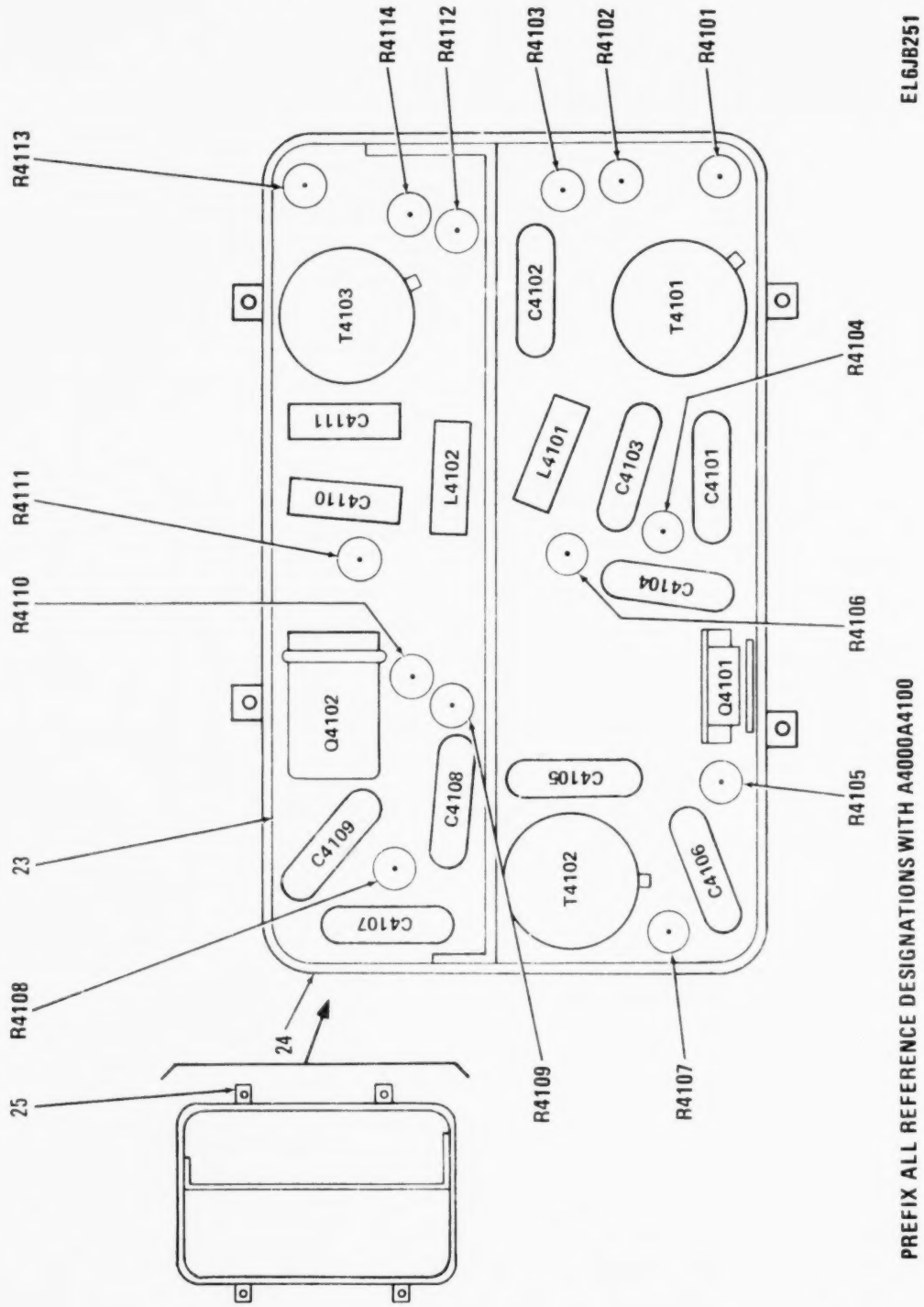

Figure 52. Amplifier, Intermediate Frequency (Sheet 2 of 2).

(1) ILLUSTRATION (a) FIG NO	(1) ILLUSTRATION (b) ITEM NO	(2) SMR CODE	(3) NATIONAL STOCK NUMBER	(4) FSCM	(5) PART NUMBER	(6) DESCRIPTION / USABLE ON CODE	(7) U/M	(8) QTY INC IN UNIT
						GROUP 01330101 AMPLIFIER INTERMEDIATE FREQ		
52	1	PADZZ	5910-00-857-5305	18796	855-Z22X5S0-103M	CAPACITOR,FIXED,CER .01 UF,PORM 20 PCT,100 VDCW	EA	5
52	2	PADZZ	5910-01-038-7913	81349	CMR05F221F0DR	CAPACITOR,FIXED,MIC	EA	1
52	3	PADZZ	5910-01-058-7492	81349	CMR05C7R0D0DR	CAPACITOR,FIXED,MIC	EA	1
52	4	PADZZ	5910-01-043-6899	81349	CMR05F121G0DR	CAPACITOR,FIXED,MIC	EA	1
52	5	PADZZ	5910-00-892-3027	80063	SM-C-413567-1	CAPACITOR,FIXED,CER .001 UF,PORM 20 PCT,100 VDCW	EA	1
52	6	PADZZ	5910-00-061-7044	81349	CC22SK1R0C	CAPACITOR,FIXED,CER	EA	1
52	7	PADZZ	5910-00-882-3782	81349	CC22SH200G	CAPACITOR,FIXED,CER	EA	1
52	8	PADZZ	5950-01-004-7262	96906	MS14046-7	COIL,RADIO FREQUEN	EA	2
52	9	XADZZ		81349	JAN2N502B	TRANSISTOR	EA	1
52	10	XADZZ		80063	SM-C-374842	TRANSISTOR	EA	1
52	11	PADZZ	5905-00-111-4750	81349	RCR07G301JS	RESISTOR,FIXED,COMP	EA	4
52	12	PADZZ	5905-00-115-7953	81349	RCR07G180JS	RESISTOR,FIXED,COMP	EA	2
52	13	PADZZ	5905-00-104-8358	81349	RCR07G822JS	RESISTOR,FIXED,COMP	EA	1
52	14	PADZZ	5905-00-114-0711	81349	RCR07G472JS	RESISTOR,FIXED,COMP	EA	2
52	15	PADZZ	5905-00-106-1356	81349	RCR07G152JS	RESISTOR,FIXED,COMP	EA	1
52	16	PADZZ	5905-00-110-7622	81349	RCR07G682JS	RESISTOR,FIXED,COMP	EA	1
52	17	PADZZ	5905-00-141-0744	81349	RCR07G562JS	RESISTOR,FIXED,COMP	EA	1
52	18	PADZZ	5905-00-126-6683	81349	RCR07G332JS	RESISTOR,FIXED,COMP	EA	1
52	19	PADZZ	5905-00-113-4861	81349	RCR07G390JS	RESISTOR,FIXED,COMP	EA	1
52	20	PADZZ	5950-01-011-4244	80063	SM-D-413740	TRANSFORMER,RADIO F	EA	1
52	21	PADZZ	5950-01-011-4243	80063	SM-D-413735	TRANSFORMER,RADIO F	EA	1
52	22	PADZZ	5950-01-011-5527	80063	SM-D-413742	TRANSFORMER,RADIO F	EA	1
52	23	XDDZZ		80063	SM-D-413744	CIRCUIT BD ASSY	EA	1
52	24	XDDDA		80063	SM-C-413747	COVER ASSY	EA	1
52	25	XADZZ		80063	SM-B-413751	POST,SHIELD	EA	4

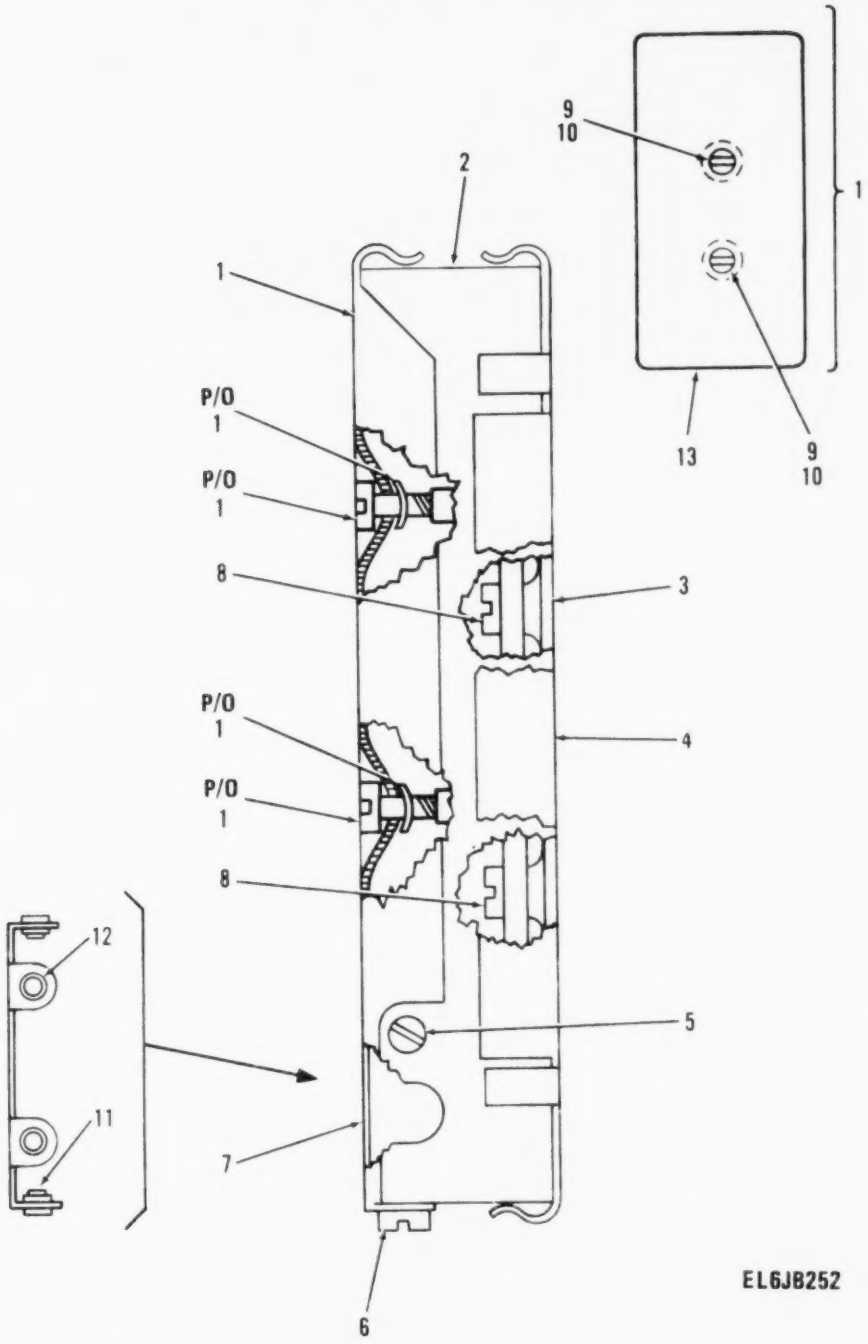

Figure 53. Limiter-Discriminator

(1) ILLUSTRATION (a) FIG NO	(b) ITEM NO	(2) SMR CODE	(3) NATIONAL STOCK NUMBER	(4) FSCM	(5) PART NUMBER	(6) DESCRIPTION / USABLE ON CODE	
						GROUP 013302 LIMITER DISCRIMINATOR	
						AN/ZSC SM-C-413753	
53	1	XDDDA		80063	SM-C-413761	COVER ASSY	EA
53	2	XDDDL		80063	SM-D-413764	AMPL DSCRM ASSY	EA
53	3	XDDZZ		80063	SM-D-413755	BASE	EA
53	4	XDDZZ		80063	SM-D-413756	COVER,BOTTOM	EA
53	5	PADZZ	5305-00-762-7482	96906	MS35206-202	SCREW,MACHINE	EA
53	6	PAFZZ	5305-00-993-0191	96906	MS35206-212	SCREW,MACHINE	EA
53	7	XDDZA		80063	SM-B-413757	SHIELD PLATE ASSY	EA
53	8	PADZZ	5305-00-855-0962	96906	MS24629-3	SCREW,TAPPING,THRD	EA
53	9	PAFZZ		83486	43-04-04120NI PL	SCREW,ASSEMBLED WA	EA
53	10	PAFZZ		78553	C-1869555-012	NUT,SHEET SPRING	EA
53	11	XDDZZ		30655	22NCFMA1-26	NUT,SELFLKG	EA
53	12	XDDZZ		30655	22NCFMA1-40	NUT,SELFLKG	EA
53	13	XDDZA		80063	SM-D-413763	COVER,TOP	EA

LEGEND

REF DES	ITEM NO	REF DES	ITEM NO	REF DES	ITEM NO	REF DES	ITEM NO
CR4201	1	C4214	6	L4204	14	R4213	24
CR4202	2	C4215	5	L4205	15	R4214	22
CR4203	2	C4216	9	Q4201	16	R4215	23
CR4204	3	C4217	10	Q4202	17	R4216	27
CR4205	3	C4218	5	Q4203	17	R4217	24
C4201	4	C4219	6	Q4204	17	R4218	28
C4202	5	C4220	5	R4201	18	R4219	29
C4203	6	C4221	5	R4202	19	R4220	29
C4204	5	C4222	9	R4203	19	R4221	30
C4205	7	C4223	10	R4204	20	R4222	31
C4206	8	C4224	11	R4205	21	R4223	32
C4207	5	C4225	12	R4206	22	T4201	33
C4208	6	C4226	13	R4207	23	T4202	34
C4209	5	C4227	13	R4208	24	T4203	35
C4210	9	C4228	10	R4209	25	T4204	35
C4211	10	L4201	14	R4210	26	T4205	36
C4212	5	L4202	14	R4211	22	T4206	37
C4213	5	L4203	14	R4212	23	T4207	37

PREFIX ALL REFERENCE DESIGNATIONS WITH A4000A4200

EL6JB253

Figure 54. Amplifier Discriminator Assembly (Sheet 1 of 2).

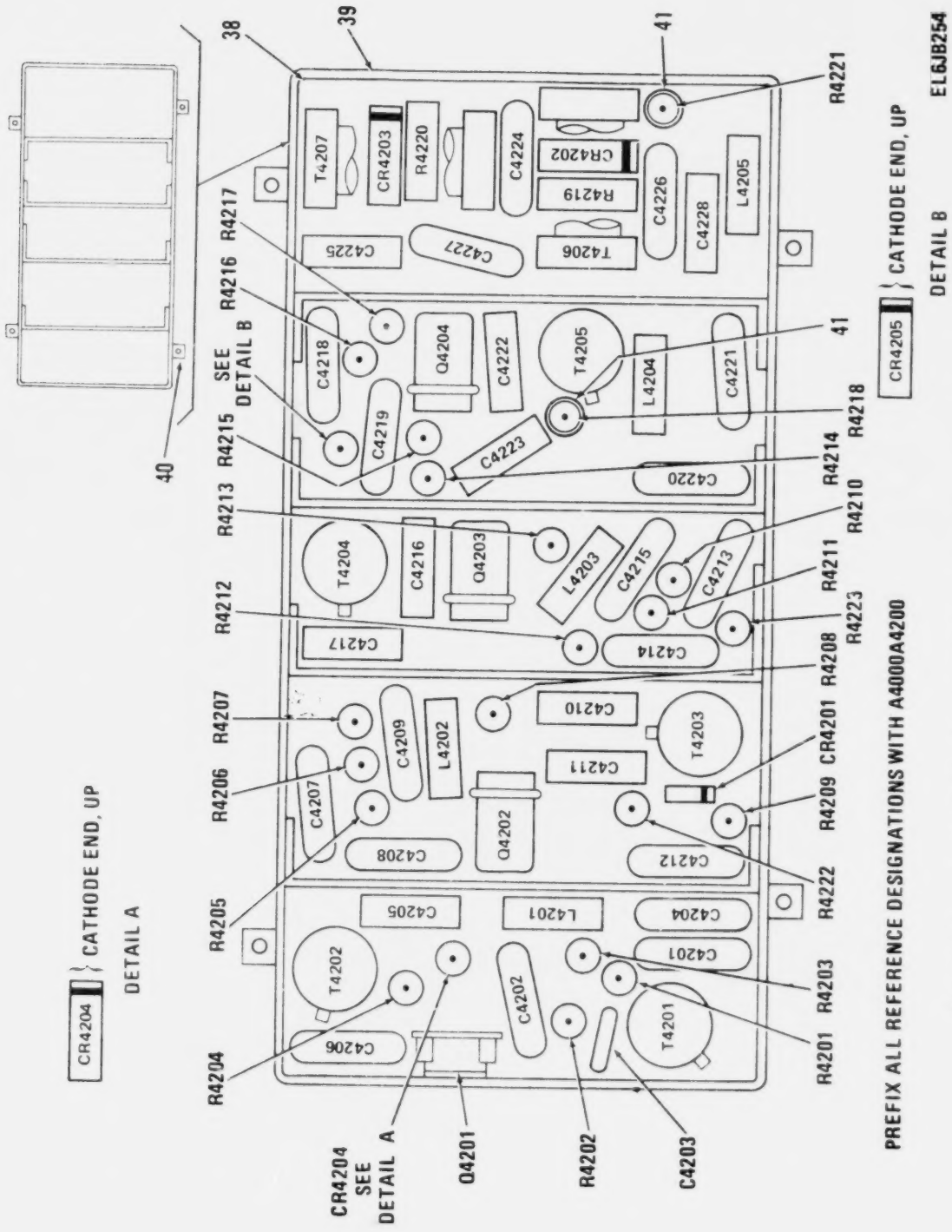

Figure 54. Amplifier Discriminator Assembly (Sheet 2 of 2).

(1) ILLUSTRATION (a) FIG NO	(b) ITEM NO	(2) SMR CODE	(3) NATIONAL STOCK NUMBER	(4) FSCM	(5) PART NUMBER	(6) DESCRIPTION / USABLE ON CODE	(7) U/M	(8) QTY INC IN UNIT
						GROUP 01030201 AMPLIFIER DISCRIMINATOR ASSEMBLY		
54	1	PADZZ	5961-00-842-9864	81349	JAN1N914	SEMICONDUCTOR DEVIC	EA	1
54	2	PADZZ	5961-00-938-5253	03877	1N3564	SEMICONDUCTOR DEVIC	EA	1
54	3	PADZZ	5961-00-556-2091	81349	JAN1N270	SEMICONDUCTOR DEVIC	EA	2
54	4	PADZZ	5910-01-038-7913	81349	CMR05F221FODR	CAPACITOR,FIXED,MIC	EA	1
54	5	PADZZ	5910-00-857-5305	18796	855-222X550-103M	CAPACITOR,FIXED,CER .01 UF,PORM 20 PCT,100 VDCW	EA	10
54	6	PADZZ	5910-00-892-3027	80063	SM-C-413567-1	CAPACITOR,FIXED,CER .001 UF,PORM 20 PCT,100 VDCW	EA	4
54	7	PADZZ	5910-00-806-0668	81349	CC22CH7R0D	CAPACITOR,FIXED,CER	EA	1
54	8	PADZZ	5910-01-043-6899	81349	CMR05F121GODR	CAPACITOR,FIXED,MIC	EA	1
54	9	PADZZ	5910-00-061-7044	81349	CC22SK1R0C	CAPACITOR,FIXED,CER	EA	3
54	10	PADZZ	5910-00-882-3782	81349	CC22SH200G	CAPACITOR,FIXED,CER	EA	4
54	11	PADZZ	5910-00-807-1545	81349	CC30CH300G	CAPACITOR,FIXED,CER	EA	1
54	12	PADZZ	5910-00-805-6628	81349	CC22SH360G	CAPACITOR,FIXED,CER	EA	1
54	13	PADZZ	5910-01-043-6891	81349	CMR05E300GODR	CAPACITOR,FIXED,MIC	EA	2
54	14	PADZZ	5950-01-004-7262	96906	MS14046-7	COIL,RADIO FREQUENC	EA	4
54	15	PADZZ	5950-01-064-9308	80063	SM-B-413782	COIL,RADIO FREQUENC 10 UH PORM 5 PCT INDUCTANCE AT 7.9 MHZ	EA	1
54	16	XADZZ		81349	JAN2N502B	TRANSISTOR	EA	1
54	17	XADZZ		80063	SM-C-374842	TRANSISTOR	EA	3
54	18	PADZZ	5905-00-104-8358	81349	RCR07G822JS	RESISTOR,FIXED,COMP	EA	1
54	19	PADZZ	5905-00-114-0711	81349	RCR07G472JS	RESISTOR,FIXED,COMP	EA	2
54	20	PADZZ	5905-00-106-1356	81349	RCR07G152JS	RESISTOR,FIXED,COMP	EA	1
54	21	PADZZ	5905-00-110-7620	81349	RCR07G102JS	RESISTOR,FIXED,COMP	EA	1
54	22	PADZZ	5905-00-105-7764	81349	RCR07G222JS	RESISTOR,FIXED,COMP	EA	1
54	23	PADZZ	5905-00-110-7622	81349	RCR07G682JS	RESISTOR,FIXED,COMP	EA	1
54	24	PADZZ	5905-00-113-4861	81349	RCR07G390JS	RESISTOR,FIXED,COMP	EA	3
54	25	PADZZ	5905-00-120-9154	81349	RCR07G471JS	RESISTOR,FIXED,COMP	EA	1
54	26	PADZZ	5905-00-111-4727	81349	RCR07G272JS	RESISTOR,FIXED,COMP	EA	1
54	27	PADZZ	5905-00-141-0743	81349	RCR07G392JS	RESISTOR,FIXED,COMP	EA	1
54	28	PADZZ	5905-00-116-8555	81349	RCR07G153JS	RESISTOR,FIXED,COMP	EA	1
54	29	PADZZ	5905-00-116-8556	81349	RCR07G223JS	RESISTOR,FIXED,COMP	EA	2
54	30	PADZZ	5905-00-126-6683	81349	RCR07G332JS	RESISTOR,FIXED,COMP	EA	1
54	31	PADZZ	5905-00-106-1278	81349	RCR07G123JS	RESISTOR,FIXED,COMP	EA	1
54	32	PADZZ	5905-00-135-3973	81349	RCR07G221JS	RESISTOR,FIXED,COMP	EA	1
54	33	PADZZ	5950-01-011-4244	80063	SM-D-413740	TRANSFORMER,RADIO F	EA	1
54	34	PADZZ	5950-01-011-4243	80063	SM-D-413735	TRANSFORMER,RADIO F	EA	1
54	35	PADZZ	5950-01-011-4245	80063	SM-D-413768	TRANSFORMER,RADIO F	EA	2
54	36	PADZZ	5950-01-011-5528	80063	SM-D-413770	TRANSFORMER,RADIO F	EA	1
54	37	PADZZ	5950-01-100-0242	80063	SM-C-413779	R.F. TRANSFORMER .065 UH MIN TO 5.15 UH MAX INDUCTANCE AT 7.9 MHZ PORM 50 KHZ	EA	2

(1) ILLUSTRATION (A) FIG. NO.	(1) ILLUSTRATION (B) ITEM NO.	(2) SMR CODE	(3) NATIONAL STOCK NUMBER	(4) FSCM	(5) PART NUMBER	(6) DESCRIPTION / USABLE ON CODE	(7) U/M	(8) QTY INC IN UNIT
54	38	XADZZ		80063	SM-D-413772	CIRCUIT BD ASSY	EA	1
54	39	XDDDA		80063	SM-D-413775	COVER ASSY	EA	1
54	40	XDDZZ		80063	SM-B-413751	POST,SHIELD	EA	4
54	41	XDDZZ	5340-01-104-7017	80063	SM-B-447252	SPACER,SPECIAL	EA	2

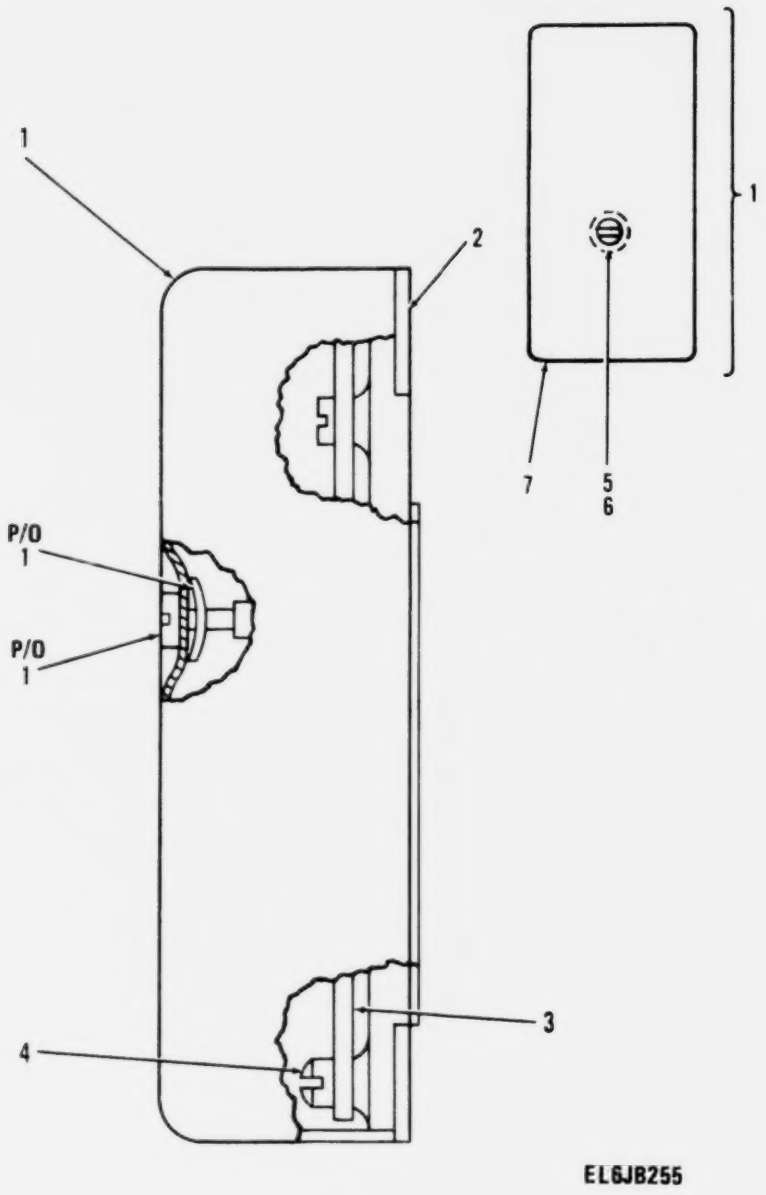

Figure 55. Amplifier, Audio (Audio and Squelch Pre-Amp Assembly).

(1) ILLUSTRATION (a) FIG NO	(1) ILLUSTRATION (b) ITEM NO	(2) SMR CODE	(3) NATIONAL STOCK NUMBER	(4) FSCM	(5) PART NUMBER	(6) DESCRIPTION / USABLE ON CODE	(7) U/M	(8) QTY INC IN UNIT
						GROUP 010303 AMPLIFIER AUDIO (AUDIO AND SQUELCH PRE-AMP ASSY) A4300 SM-B-413785		
55	1	XDDDD		80063	SM-B-413789	COVER ASSY	EA	1
55	2	XDDZZ		80063	SM-D-413787	BASE	EA	1
55	3	XDDDL		80063	SM-D-413792	AMPL ASSY	EA	1
55	4	PADZZ	5305-00-855-0970	96906	MS24629-12	SCREW,TAPPING,THREA	EA	1
55	5	PAFZZ	5305-00-988-5747	83486	43-04-04120CD PL	SCREW,ASSEMBLED WAS	EA	1
55	6	PAFZZ		78553	C-18695SS-012	NUT,SHEET SPRING	EA	1
55	7	XDDZZ		80063	SM-C-413791	COVER	EA	1

LEGEND

REF DES	ITEM NO	REF DES	ITEM NO	REF DES	ITEM NO	REF DES	ITEM NO
C4301	1	L4301	4	R4301	7	R4305	11
C4302	2	Q4301	5	R4302	8	R4306	9
C4303	3	Q4302	6	R4303	9	R4307	12
C4304	2	Q4303	6	R4304	10	R4308	13

PREFIX ALL REFERENCE DESIGNATIONS WITH A4000A4300

EL6JB256

Figure 56. Amplifier Assembly (Sheet 1 of 2).

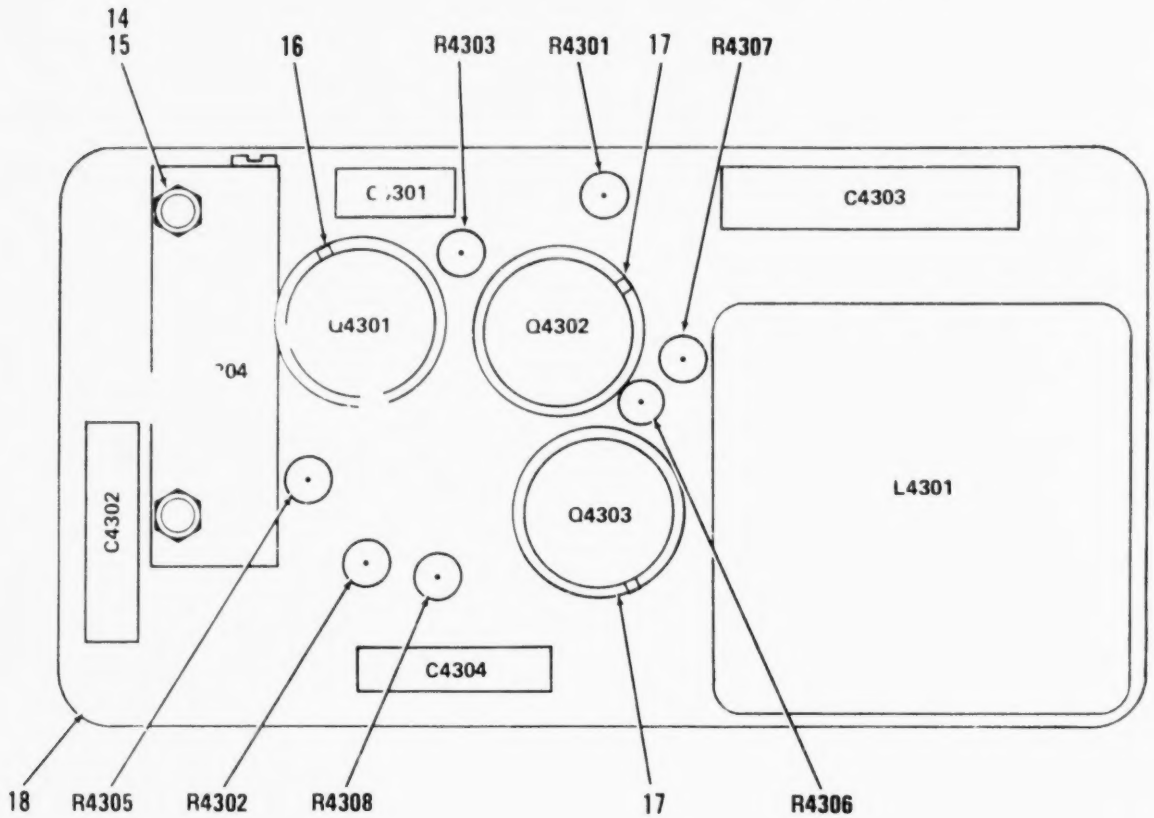

PREFIX ALL REFERENCE DESIGNATIONS WITH A4000A4300

EL6JB257

Figure 56. Amplifier Assembly (Sheet 2 of 2).

(1) ILLUSTRATION (a) FIG NO	(1) ILLUSTRATION (b) ITEM NO	(2) SMR CODE	(3) NATIONAL STOCK NUMBER	(4) FSCM	(5) PART NUMBER	(6) DESCRIPTION USABLE ON CODE	(7) U/M	(8) QTY INC IN UNIT
						GROUP 01030301 AMPLIFIER ASSY		
56	1	PADZZ	5910-00-185-9045	81349	M39003/01-3000	CAPACITOR,FIXED,ELE	EA	1
56	2	PADZZ	5910-00-007-2003	81349	M39003/01-3009	CAPACITOR,FIXED,ELE	EA	2
56	3	PADZZ	5910-00-114-0221	81349	M39003/01-3018	CAPACITOR,FIXED,ELE	EA	1
56	4	XDDZZ		97315	8C4469A	REACTOR 6.5 H MIN INDUCTANCE AT 1V,1000 HZ,10 MILLIAMP DC,45 VDCW	EA	1
56	5	XADZZ		81349	JAN2N335	TRANSISTOR	EA	1
56	6	XADZZ		53399	4JX1C1607	TRANSISTOR VCB-25V,VEB-12V,ICOPEAK-150 MILLIAMP,PD 250 MILLIWATTS	EA	2
56	7	PADZZ	5905-00-110-0388	81349	RCR07G104JS	RESISTOR,FIXED,COMP	EA	1
56	8	PADZZ	5905-00-105-7764	81349	RCR07G222JS	RESISTOR,FIXED,COMP	EA	1
56	9	PADZZ	5905-00-126-6683	81349	RCR07G332JS	RESISTOR,FIXED,COMP	EA	2
56	10	PADZZ	5905-00-692-1330	32997	220W-1-102	RESISTOR,VARIABLE,W 1100 OHMS MAX	EA	1
56	11	PADZZ	5905-00-114-0711	81349	RCR07G472JS	RESISTOR,FIXED,COMP	EA	1
56	12	PADZZ	5905-00-135-3973	81349	RCR07G221JS	RESISTOR,FIXED,COMP	EA	1
56	13	PADZZ	5905-00-105-7768	81349	RCR07G561JS	RESISTOR,FIXED,COMP	EA	1
56	14	PADZZ	5310-01-100-6991	30655	F92-1660-26	NUT,SELF-LOCKING,ME	EA	2
56	15	PADZZ	5305-00-989-0682	96906	MS35206-205	SCREW,MACHINE	EA	2
56	16	PADZZ	5999-00-752-5321	07047	A-10012	INSULATOR,DISK	EA	1
56	17	PADZZ	5961-01-100-3849	80063	SM-B-413797	RETAINER,TRANSISTOR	EA	2
56	18	XADZZ		80063	SM-C-413799	CIRCUIT BOARD ASSY	EA	1

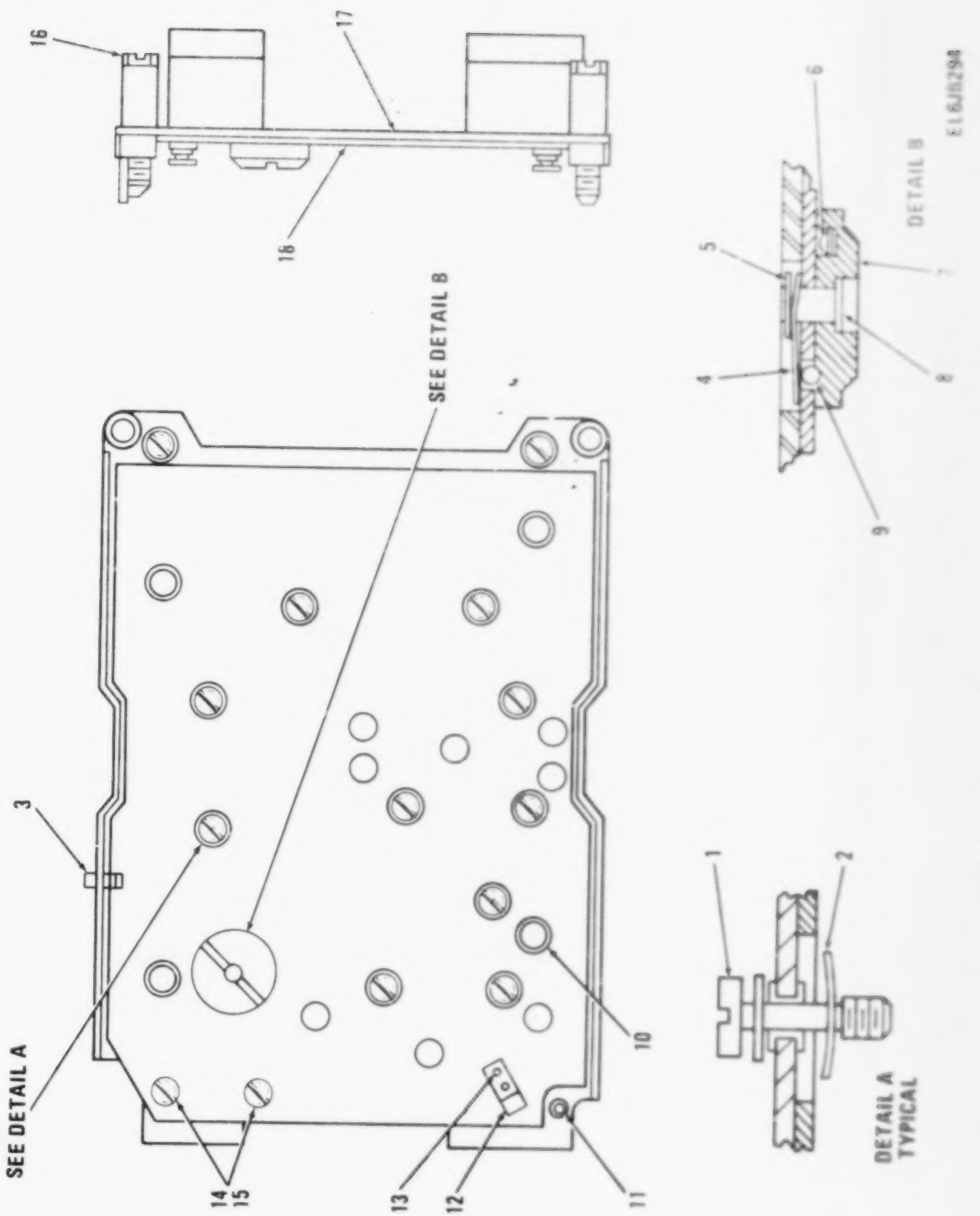

Figure 57. Chassis Assembly, Electrical (Sheet 1 of 2).

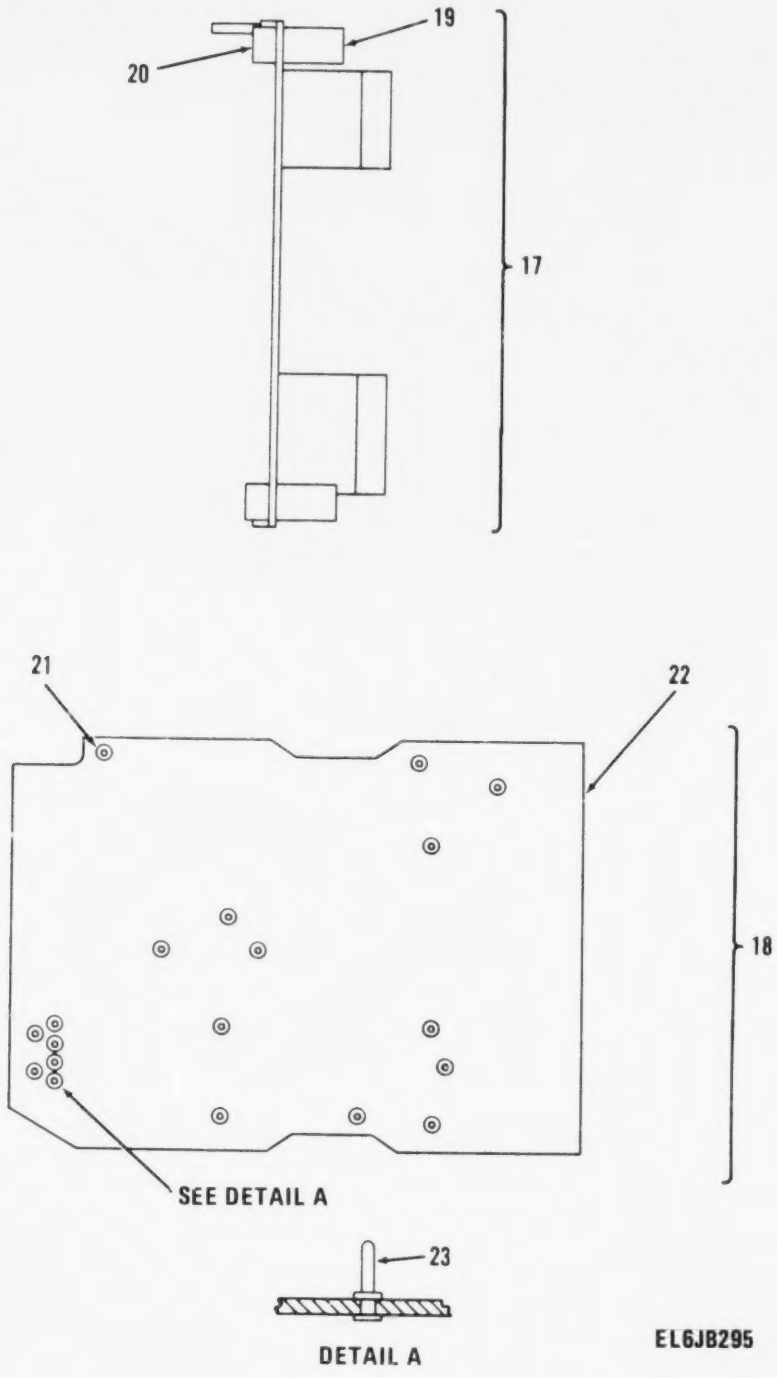

Figure 57. Chassis Assembly, Electrical (Sheet 2 of 2).

(1) ILLUSTRATION (a) FIG NO	(1) ILLUSTRATION (b) ITEM NO	(2) SMR CODE	(3) NATIONAL STOCK NUMBER	(4) FSCM	(5) PART NUMBER	(6) DESCRIPTION / USABLE ON CODE	(7) U/M	(8) QTY INC IN UNIT
						GROUP 010304 CHASSIS ASSEMBLY,ELECTRI-		
						CAL AI SM-D-413802		
57	1	PAFZZ		83486	43-04-04120N1 PL	SCREW,ASSEMBLED WA	EA	12
57	2	PAFZZ		78553	C-1869555-012	NUT,SHEET SPRING	EA	12
57	3	XDDZZ		80063	SM-B-413538	PIN,SHLDR HD	EA	1
57	4	XDDZZ		80063	SM-B-413804	CONTACT	EA	1
57	5	PADZZ	5365-00-282-5322	79136	5133-12	RING,RETAINING	EA	1
57	6	XDDZZ		43710	0617-A-2922	CONTACT,ELECTRICAL	EA	1
57	7	PADZZ		80063	SM-C-413805	HOUSING	EA	1
57	8	PADZZ	5820-01-129-7757	80063	SM-B-413806	SHAFT	EA	1
57	9	PADZZ	3110-00-183-9175	96906	MS134352	BALL,BEARING	EA	1
57	10	XDDZZ		80063	SM-B-413535	STUD	EA	4
57	11	PADZZ	5940-00-914-3116	81349	M55155-29-7	TERMINAL,STUD	EA	1
57	12	XDDZZ		80063	SM-B-413539	CLIP,SPR TNSN	EA	1
57	13	XDDZZ		08544	SE25FIN NONE	EYELET,MTLC	EA	2
57	14	PAFZZ	5305-00-849-9046	80063	SM-C-413531-11	SCREW,EXTERNALLY RE	EA	2
57	15	PAFZZ	5310-00-045-4007	96906	MS35338-41	WASHER,LOCK	EA	2
57	16	PAFZZ	5305-00-853-6339	80063	SM-B-413532-2	SCREW,EXTERNALLY RE	EA	2
57	17	XDDDA		80063	SM-C-413807	CHASSIS ASSY	EA	1
57	18	XDDDD		80063	SM-D-413810	CIRCUIT BOARD ASSY	EA	1
57	19	XDDZZ		80063	SM-C-413536-4	SPACER	EA	2
57	20	XDDZZ		80063	SM-B-413537-2	SPACER	EA	2
57	21	XDDZZ		70528	453S-046	EYELET,MTLC	EA	1
57	22	XDDZZ		80063	SM-D-413812	PRINTED CIRCUIT BD	EA	1
57	23	XDDZZ		80063	SM-B-413546-1	CONTACT	EA	18

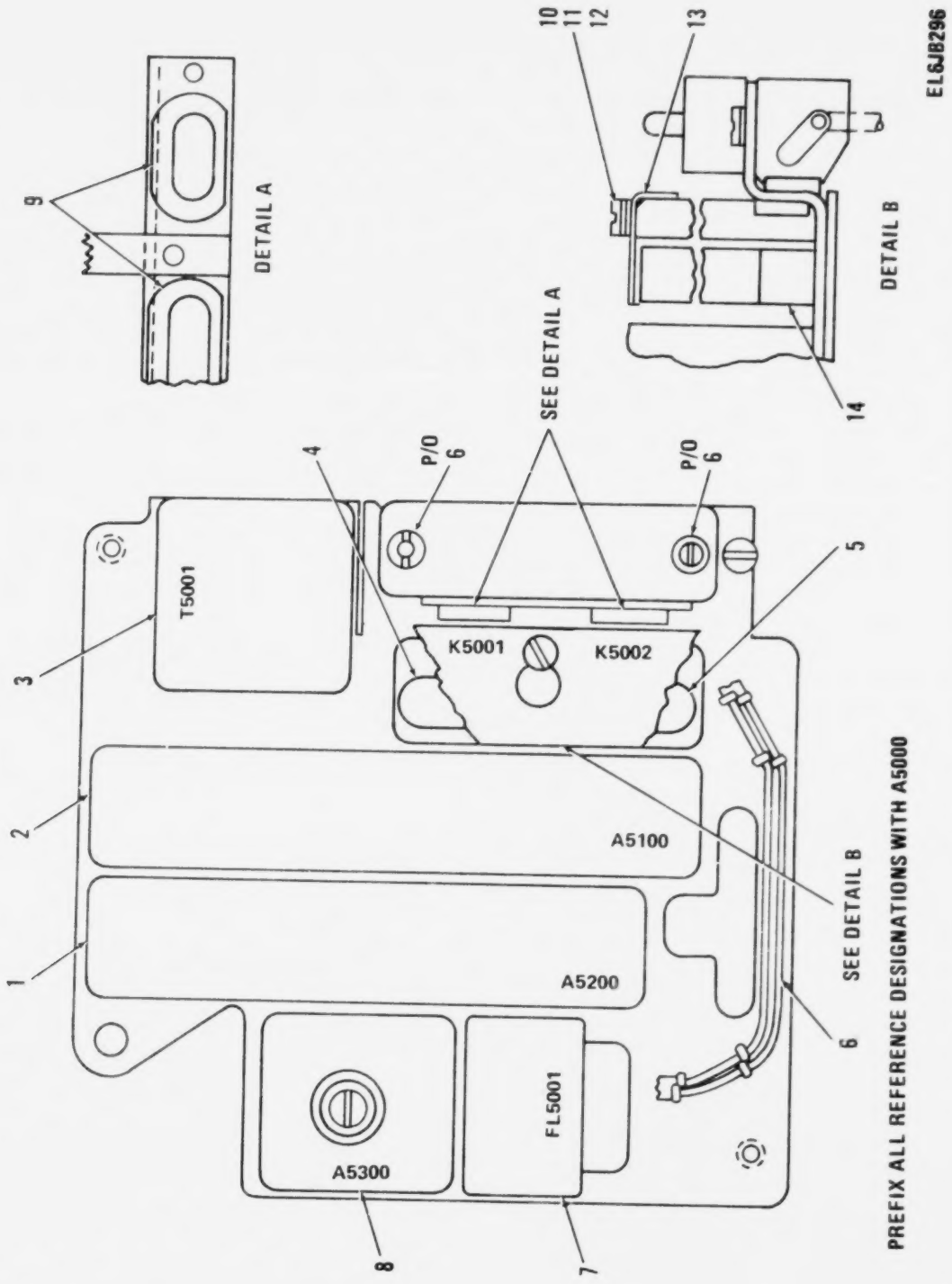

Figure 58. Amplifier Assembly, IF, Audio and Squelch (Sheet 1 of 3).

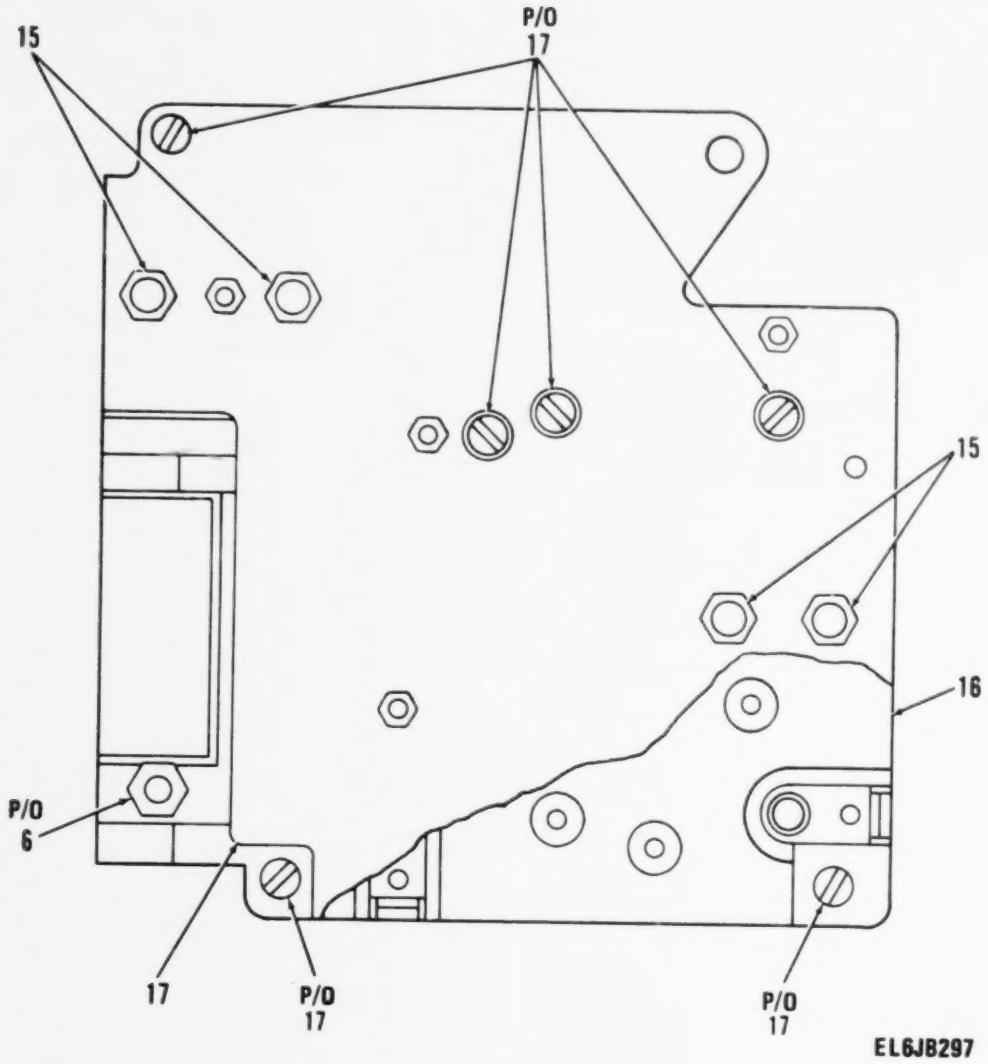

Figure 58. Amplifier Assembly, IF, Audio and Squelch (Sheet 2 of 3).

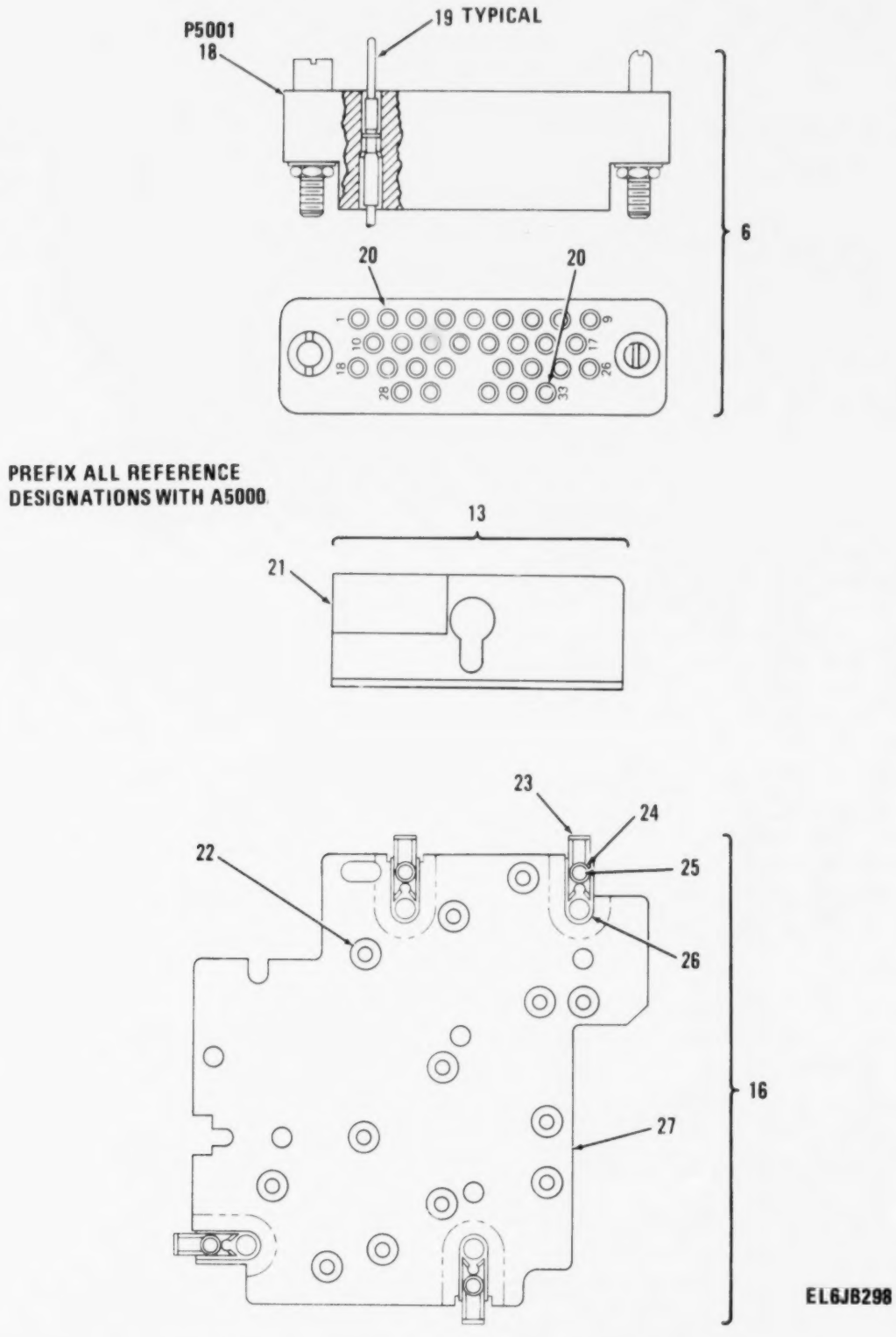

Figure 58. Amplifier Assembly, IF, Audio and Squelch (Sheet 3 of 3).

(1) ILLUSTRATION (A) FIG NO	(1) ILLUSTRATION (B) ITEM NO	(2) SMR CODE	(3) NATIONAL STOCK NUMBER	(4) FSCM	(5) PART NUMBER	(6) DESCRIPTION / USABLE ON CODE	(7) U/M	(8) QTY INC IN UNIT
						GROUP 0104 AMPLIFIER ASSY,IF (AUDIO AND SQUELCH AMPLIFIER A5000 AND A5000A SM-D-413820		
58	1	PAFDL	5820-00-853-5968	80063	SM-C-413849	AMPLIFIER,SQUELCH	EA	1
58	2	PAFDL	5820-00-853-5960	80063	SM-C-413834	AMPLIFIER,AUDIO FRE	EA	1
58	3	PAFZZ	5950-00-854-2814	80045	812029	TRANSFORMER,AUDIO F 1 WATT MAX PWR LEVEL 500 TO 3000 HZ,175 VDCW	EA	1
58	4	PAFZZ	5945-00-853-5945	82050	BR8-600A1-F1-26V	RELAY,ELECTROMAGNET DPDT,FORM C,32 VDC MAX,600 OHMS PLUS OR MINUS 10 PCT COIL RES	EA	1
58	5	PAFZZ	5945-00-853-5946	04221	95-3559	RELAY,ELECTROMAGNET DPDT,FORM C,30 VDC MAX,1000 PLUS OR MINUS 5 PCT OHMS COIL RES	EA	1
58	6	ADDDD		80063	SM-D-413829	WIRING HARNESS ASSY	EA	1
58	7	PAFZZ	5915-00-853-6400	80045	812029	FILTER,LOW PASS	EA	1
58	8	PAFZZ	5915-00-849-3468	80063	SM-B-413860	FILTER,BAND PASS	EA	1
58	9	PAHZZ	5325-00-276-4993	76348	GB221	GROMMET,NONMETALLIC	EA	2
58	10	PAFZZ	5305-00-889-2997	96906	MS35206-215	SCREW,MACHINE	EA	1
58	11	PAFZZ	5310-00-543-2410	96906	MS35338-40	WASHER,LOCK	EA	1
58	12	PAFZZ	5310-00-951-4679	96906	MS27183-3	WASHER,FLAT	EA	1
58	13	PAFZZ	5340-01-124-1469	80063	SM-B-413933	BRACKET ASSEMBLY	EA	1
58	14	PAHZA	5935-00-901-4718	05574	000300-0315	SOCKET,PLUG-IN ELEC 8 SOCKET TYPE CONTACTS	EA	2
58	15	PAFZZ	5310-00-582-9176	30655	F92-1660-40	NUT,SELF-LOCKING,HE	EA	2
58	16	PAFFF	5999-00-853-6378	80063	SM-D-413876	PLATE,ELECTRICAL SM	EA	1
58	17	PAHHH	5820-01-102-7727	80063	SM-D-413879	CHASSIS ASSEMBLY	EA	1
58	18	PAHZZ	5935-00-853-6838	05574	00041-0014	CONNECTOR BODY,RECE 34 CONTACTS,500 V RMS WORKING VOLTAGE	EA	1
58	19	PAHZA	5935-00-853-6401	80063	SM-C-413832-1	PLUG,TIP	EA	28
58	20	PAHZA	5999-00-853-6860	80063	SM-C-413832-2	CONTACT,ELECTRICAL	EA	2
58	21	XBFZZ		80063	SM-B-414302-4	PAD,RUBBER MAKE FROM MIL-R-6130 TYP1,GR A,COND SOFT,BLK SYN 1/8 THK	EA	1
58	22	PAFZZ	3120-00-897-6873	80063	SM-B-413554	BUSHING,SLEEVE	EA	13
58	23	PAFZZ	5325-00-262-9130	88447	38881-L	LATCH,SNAPSLIDE FAS	EA	4
58	24	XAFZZ		88447	38891-W	WASHER,SPR TNSN	EA	4
58	25	XAFZZ		88447	38901-R	RIVET,TUBULAR	EA	4
58	26	XAFZZ		88447	38871-G-2	GUIDE	EA	4
58	27	XBFZZ		80063	SM-D-413878	PLATE,SHIELD	EA	1

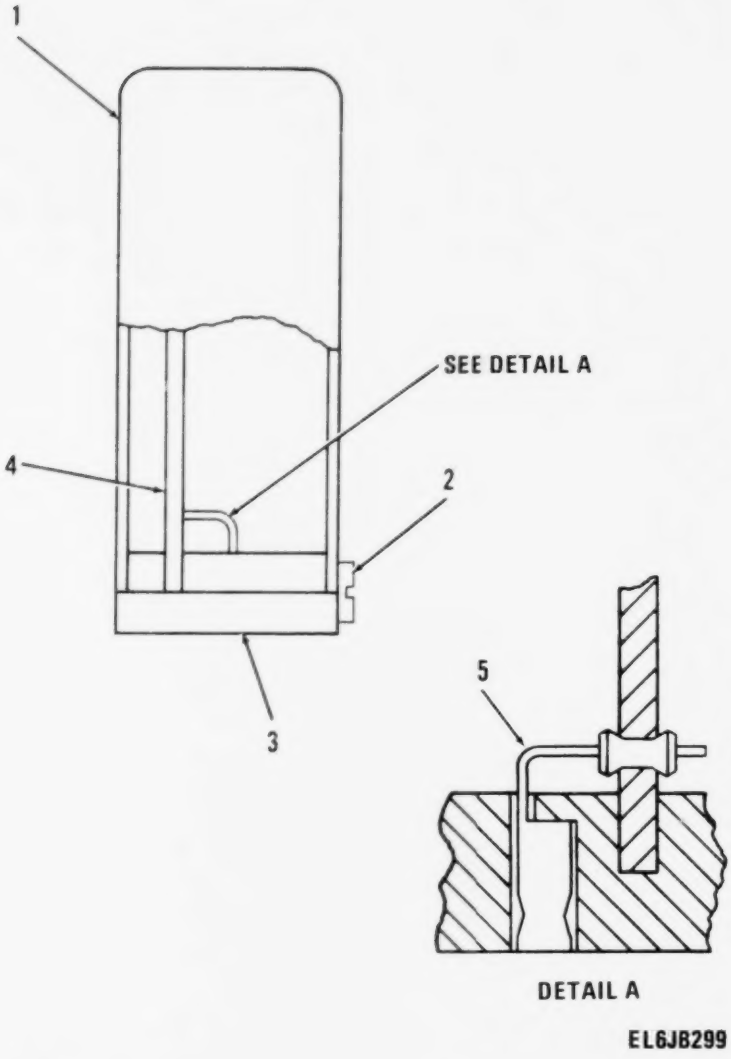

Figure 59. Amplifier, Audio Frequency Assembly, RCVR Audio Amplifier.

(1) ILLUSTRATION (a) FIG NO	(1) ILLUSTRATION (b) ITEM NO	(2) SMR CODE	(3) NATIONAL STOCK NUMBER	(4) FSCM	(5) PART NUMBER	(6) DESCRIPTION / USABLE ON CODE	(7) U M	(8) QTY INC IN UNIT
						GROUP 010401 AMPLIFIER,AUDIO FREQUENCY		
						ASSY (RCVR AUDIO AMPLI-		
						FIER) A5100 SM-C-413834		
59	1	XDDZZ		80063	SM-C-413838	COVER	EA	1
59	2	PADZZ	5305-00-152-0546	80063	SM-B-413837	SCREW,MACHINE	EA	1
59	3	XDDZZ		80063	SM-D-413836	BASE	EA	1
59	4	XDDDD		80063	SM-D-413839	AMPLIFIER ASSY,RF	EA	1
59	5	XDDZA		80063	SM-C-413574	CONTACT	EA	13

LEGEND

REF DES	ITEM NO	REF DES	ITEM NO	REF DES	ITEM NO	REF DES	ITEM NO
CR5101	1	C5106	6	R5101	14	R5110	22
CR5102	1	C5107	7	R5102	15	R5111	18
CR5103	1	C5108	8	R5103	16	R5112	23
CR5104	2	Q5101	9	R5104	17	R5113	23
C5101	3	Q5102	10	R5105	18	R5114	19
C5102	4	Q5103	11	R5106	19	R5115	24
C5103	4	Q5104	9	R5107	20	R5116	25
C5104	3	RT5101	12	R5108	16	R5117	26
C5105	5	RT5102	13	R5109	21	R5118	23

PREFIX ALL REFERENCE DESIGNATIONS WITH A5000A5100

EL6JB302

Figure 60. Amplifier Assembly, Radio Frequency (Sheet 1 of 2).

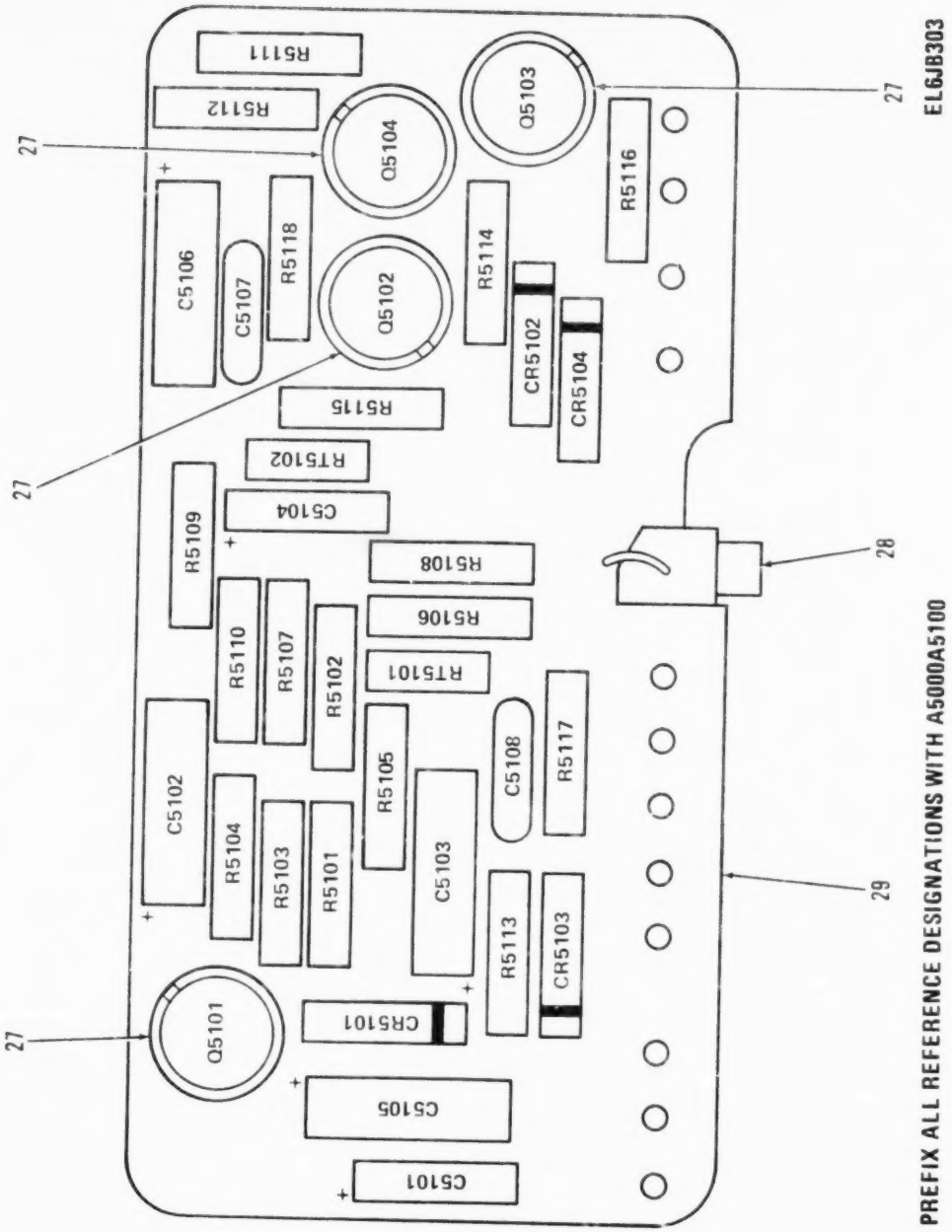

Figure 60. Amplifier Assembly, Radio Frequency (Sheet 2 of 2).

(1) ILLUSTRATION (a) FIG NO	(1) ILLUSTRATION (b) ITEM NO	(2) SMR CODE	(3) NATIONAL STOCK NUMBER	(4) FSCM	(5) PART NUMBER	(6) DESCRIPTION / USABLE ON CODE	(7) U/M	(8) QTY INC IN UNIT
						GROUP 01040101 AMPLIFIER ASSY,RADIO FREQ		
60	1	PADZZ	5961-00-087-6047	81349	JAN1N645	SEMICONDUCTOR DEVIC	EA	3
60	2	PADZZ	5961-00-957-6865	81349	JAN1N3611	SEMICONDUCTOR DEVIC	EA	1
60	3	PADZZ	5910-00-185-9045	81349	M39003/01-3000	CAPACITOR,FIXED,ELE	EA	2
60	4	PADZZ	5910-00-007-2003	81349	M39003/01-3009	CAPACITOR,FIXED,ELE	EA	1
60	5	PADZZ	5910-00-113-5475	81349	M39003/01-3006	CAPACITOR,FIXED,ELE	EA	1
60	6	PADZZ	5910-00-481-0470	81349	M39003/01-3005	CAPACITOR,FIXED,ELE	EA	1
60	7	PADZZ	5910-00-477-7548	56289	20C201	CAPACITOR,FIXED,CER .47 UF PLUS 100 MINUS 0 TOL	EA	1
60	8	PADZZ	5910-00-857-5305	18796	855-222X550-103M	CAPACITOR,FIXED,CER .01 UF,PORM 20 PCT,100 VDCW	EA	1
60	9	XADZZ		81349	JAN2N328A	TRANSISTOR	EA	2
60	10	PADZZ	5961-00-949-1432	81349	JAN2N2219A	TRANSISTOR	EA	1
60	11	PADZZ	5961-00-949-1440	81349	JAN2N2905A	TRANSISTOR	EA	1
60	12	PADZZ	5905-00-992-2595	50056	31TD29	RESISTOR,THERMAL 1000 OHMS,PORM 10 PCT,RESISTANCE AT 25 DEG C	EA	1
60	13	XDDZZ		50056	25TD24	THERMISTOR .500 OHMS,PORM 10 PCT,RESISTANCE AT 25 DEG C	EA	1
60	14	PADZZ	5905-00-111-4727	81349	RCR07G272JS	RESISTOR,FIXED,COMP	EA	1
60	15	PADZZ	5905-00-115-2261	81349	RCR07G912JS	RESISTOR,FIXED,COMP	EA	1
60	16	PADZZ	5905-00-105-7768	81349	RCR07G561JS	RESISTOR,FIXED,COMP	EA	2
60	17	PADZZ	5905-00-104-8370	81349	RCR07G361JS	RESISTOR,FIXED,COMP	EA	1
60	18	PADZZ	5905-00-105-7764	81349	RCR07G222JS	RESISTOR,FIXED,COMP	EA	2
60	19	PADZZ	5905-00-114-0710	81349	RCR07G331JS	RESISTOR,FIXED,COMP	EA	1
60	20	PADZZ	5905-00-131-1255	81349	RCR07G122JS	RESISTOR,FIXED,COMP	EA	1
60	21	PADZZ	5905-00-110-7622	81349	RCR07G682JS	RESISTOR,FIXED,COMP	EA	1
60	22	PADZZ	5905-00-116-8555	81349	RCR07G153JS	RESISTOR,FIXED,COMP	EA	1
60	23	PADZZ	5905-00-135-3975	81349	RCR07G680JS	RESISTOR,FIXED,COMP	EA	3
60	24	PADZZ	5905-00-141-1183	81349	RCR07G101JS	RESISTOR,FIXED,COMP	EA	1
60	25	PADZZ	5905-00-110-7620	81349	RCR07G102JS	RESISTOR,FIXED,COMP	EA	1
60	26	PADZZ	5905-00-106-1248	81349	RCR07G162JS	RESISTOR,FIXED,COMP	EA	1
60	27	PADZZ	5999-00-752-5321	07047	A-10012	INSULATOR,DISK	EA	4
60	28	XDDZZ		80063	SM-8-374974	TERMINAL,STUD	EA	1
60	29	XDDDD		80063	SM-D-413845	CIRCUIT BOARD ASSY	EA	1

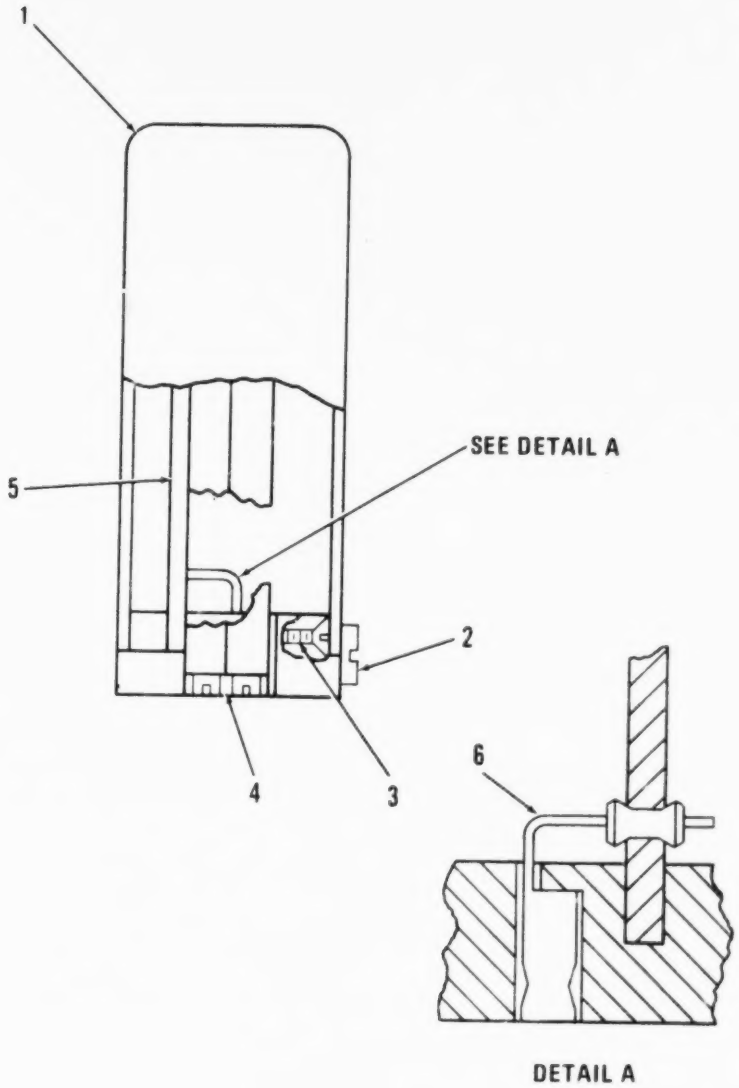

Figure 61. Amplifier, Limiter, RCVR Squelch Amplifier.

(1) ILLUSTRATION		(2)	(3)	(4)	(5)	(6)	(7)	(8)
(a) FIG NO	(b) ITEM NO	SMR CODE	NATIONAL STOCK NUMBER	FSCM	PART NUMBER	DESCRIPTION / USABLE ON CODE	U/M	QTY INC IN UNIT
						GROUP 010402 AMPLIFIER,LIMITER		
						(RCVR SQUELCH AMPLIFIER)		
						05200 SM-C-413869		
61	1	XDDZZ		80063	SM-C-413853	COVER	EA	1
61	2	PADZZ	5305-00-152-0546	80063	SM-B-413037	SCREW,MACHINE	EA	1
61	3	PADZZ	5305-00-151-6889	80063	SM-B-413052	SCREW,MACHINE	EA	1
61	4	XDDZZ		80063	SM-D-413851	BASE	EA	1
61	5	XDDDD	5895-01-106-1074	80063	SM-D-413856	DC AMPL ASSY	EA	1
61	6	XADZA		80063	SM-C-413976	CONTACT	EA	10

LEGEND

REF DES	ITEM NO	REF DES	ITEM NO	REF DES	ITEM NO	REF DES	ITEM NO
CR5201	1	C5209	8	RT5203	15	R5210	22
CR5202	1	C5210	9	R5201	16	R5211	23
CR5203	2	Q5201	10	R5202	17	R5212	18
C5201	3	Q5202	11	R5203	18	R5213	24
C5202	4	Q5203	12	R5204	18	R5214	25
C5203	5	Q5204	12	R5205	19	R5215	26
C5204	6	Q5205	13	R5206	18	R5216	27
C5205	7	Q5206	10	R5207	17	R5217	28
C5206	4	Q5207	13	R5208	20	R5218	29
C5207	3	RT5201	14	R5209	21	R5219	30
C5208	8	RT5202	14				

PREFIX ALL REFERENCE DESIGNATIONS WITH A5000A5200

EL6JB305

Figure 62. Direct Current Amplifier Assembly (Sheet 1 of 3).

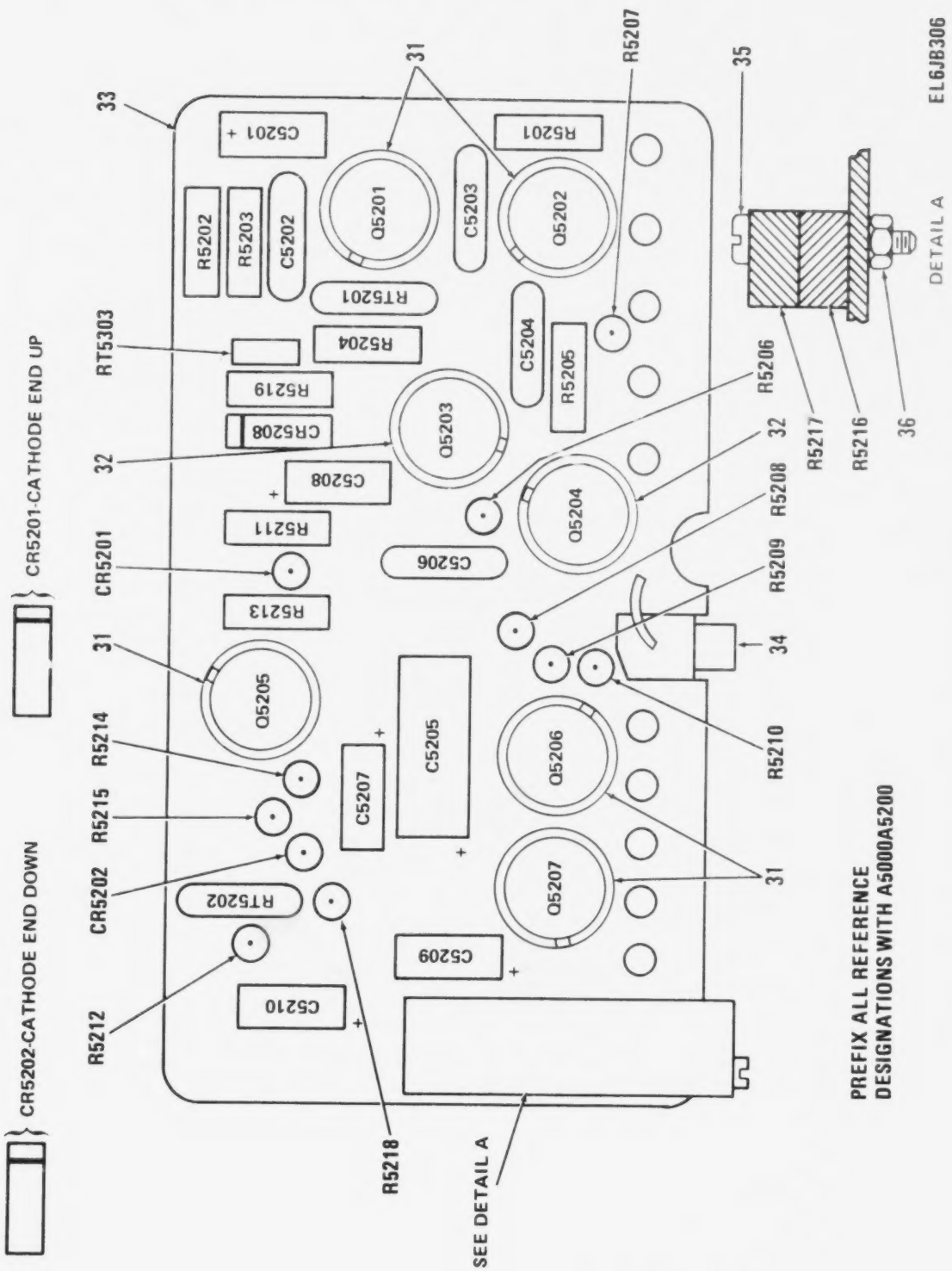

Figure 62. Direct Current Amplifier Assembly (Sheet 2 of 3).

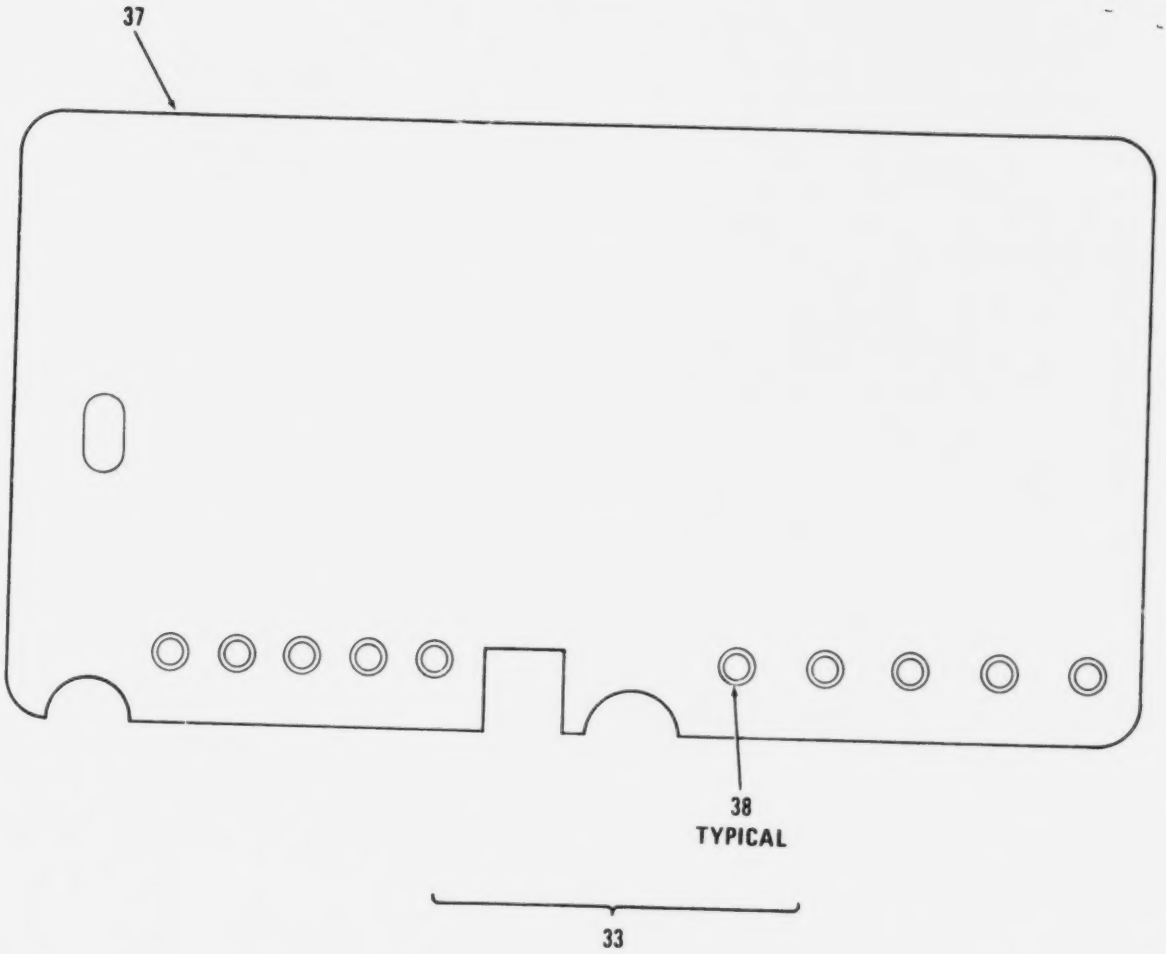

Figure 62. Direct Current Amplifier Assembly (Sheet 3 of 3).

(1) ILLUSTRATION (a) FIG NO	(b) ITEM NO	(2) SMR CODE	(3) NATIONAL STOCK NUMBER	(4) FSCM	(5) PART NUMBER	(6) DESCRIPTION / USABLE ON CODE	(7) U/M	(8) QTY INC IN UNIT
						GROUP 01340201 DIRECT CURRENT AMP ASSY		
62	1	PADZZ	5961-00-087-6047	81349	JANIN645	SEMICONDUCTOR DEVIC	EA	2
62	2	PADZZ	5961-00-938-5247	14936	IN3477A	SEMICONDUCTOR DEVIC	EA	1
62	3	PADZZ	5910-00-007-2003	81349	M39003/01-3009	CAPACITOR,FIXED,ELE	EA	2
62	4	PADZZ	5910-00-890-0554	80063	SM-C-413567-3	CAPACITOR,FIXED,CER .0047 UF,PORM 20 PCT,100 VDCW	EA	2
62	5	PADZZ	5910-00-857-5305	18796	855-222X5S0-103M	CAPACITOR,FIXED,CER .01 UF,PORM 20 PCT,100 VDCW	EA	1
62	6	PADZZ	5910-00-477-7548	56289	20C201	CAPACITOR,FIXED,CER .47 UF PORM 100 MINUS 0 TOL	EA	1
62	7	PADZZ	5910-00-113-9906	81349	M39003/01-2993	CAPACITOR,FIXED,ELE	EA	1
62	8	PADZZ	5910-00-144-4381	81349	M39003/01-3024	CAPACITOR,FIXED,ELE	EA	2
62	9	PADZZ	5910-00-185-9045	81349	M39003/01-3000	CAPACITOR,FIXED,ELE	EA	1
62	10	XADZZ		81349	JAN2N335	TRANSISTOR	EA	2
62	11	XADZZ		80063	SM-8-481750	TRANSISTOR	EA	1
62	12	XADZZ		53399	4JX1C1607	TRANSISTOR VCB-25V,VEB-12V,ICOPEAK-150 MILLIAMP,PD 250 MILLIWATTS	EA	2
62	13	XADZZ		81349	JAN2N328A	TRANSISTOR	EA	2
62	14	PADZZ	5905-00-992-2595	50056	31TD29	RESISTOR,THERMAL 1100 OHMS MAX RESISTANCE	EA	2
62	15	PADZZ	5905-00-948-4627	15801	GB35J1	RESISTOR,THERMAL .7 MW PER DEG C DISSIPATION	EA	1
62	16	PADZZ	5905-00-119-8768	81349	RCR07G821JS	RESISTOR,FIXED,COMP	EA	1
62	17	PADZZ	5905-00-110-7620	81349	RCR07G102JS	RESISTOR,FIXED,COMP	EA	1
62	18	PADZZ	5905-00-126-6683	81349	RCR07G332JS	RESISTOR,FIXED,COMP	EA	3
62	19	PADZZ	5905-00-106-1356	81349	RCR07G152JS	RESISTOR,FIXED,COMP	EA	1
62	20	PADZZ	5905-00-120-9156	81349	RCR07G471JS	RESISTOR,FIXED,COMP	EA	1
62	21	PADZZ	5905-00-105-7764	81349	RCR07G222JS	RESISTOR,FIXED,COMP	EA	1
62	22	PADZZ	5905-00-113-4860	81349	RCR07G270JS	RESISTOR,FIXED,COMP	EA	1
62	23	PADZZ	5905-00-136-8406	81349	RCR07G242JS	RESISTOR,FIXED,COMP	EA	1
62	24	PADZZ	5905-00-106-1357	81349	RCR07G563JS	RESISTOR,FIXED,COMP	EA	1
62	25	PADZZ	5905-00-110-7622	81349	RCR07G682JS	RESISTOR,FIXED,COMP	EA	1
62	26	PADZZ	5905-00-111-4727	81349	RCR07G272JS	RESISTOR,FIXED,COMP	EA	1
62	27	PADZZ	5905-00-820-4359	32997	220W-1-203	RESISTOR,VARIABLE,W 20200 OHMS MAX	EA	1
62	28	PADZZ	5905-00-845-2743	05869	719299-197	RESISTOR,VARIABLE,W 550 OHMS MAX	EA	1
62	29	PADZZ	5905-00-111-1681	81349	RCR07G134JS	RESISTOR,FIXED,COMP	EA	1
62	30	PADZZ	5905-00-111-1679	81349	RCR07G512JS	RESISTOR,FIXED,COMP	EA	1
62	31	PADZZ	5999-00-752-5321	07047	A-10012	INSULATOR,DISK	EA	5
62	32	PADZZ	5961-01-100-3849	80063	SM-8-413797	RETAINER,TRANSISTOR	EA	2
62	33	XDDDD		80063	SM-C-413856	CIRCUIT BOARD ASSY	EA	1
62	34	XDDZZ		80063	SM-8-374974	TERMINAL	EA	1
62	35	PADZZ	5305-00-054-5641	96906	MS51957-7	SCREW,MACHINE	EA	1
62	36	PADZZ	5310-00-934-9738	96906	MS35649-222	NUT,PLAIN,HEXAGON	EA	1
62	37	XDDZZ		80063	SM-D-413858	PRINTED CIRCUIT BD	EA	1

(1) ILLUSTRATION (a) FIG NO	(1) ILLUSTRATION (b) ITEM NO	(2) SMR CODE	(3) NATIONAL STOCK NUMBER	(4) FSCM	(5) PART NUMBER	(6) DESCRIPTION / USABLE ON CODE	(7) U/M	(8) QTY INC IN UNIT
62	38	XDDZZ		70528	4535-060	EYELET,MTLC	EA	10

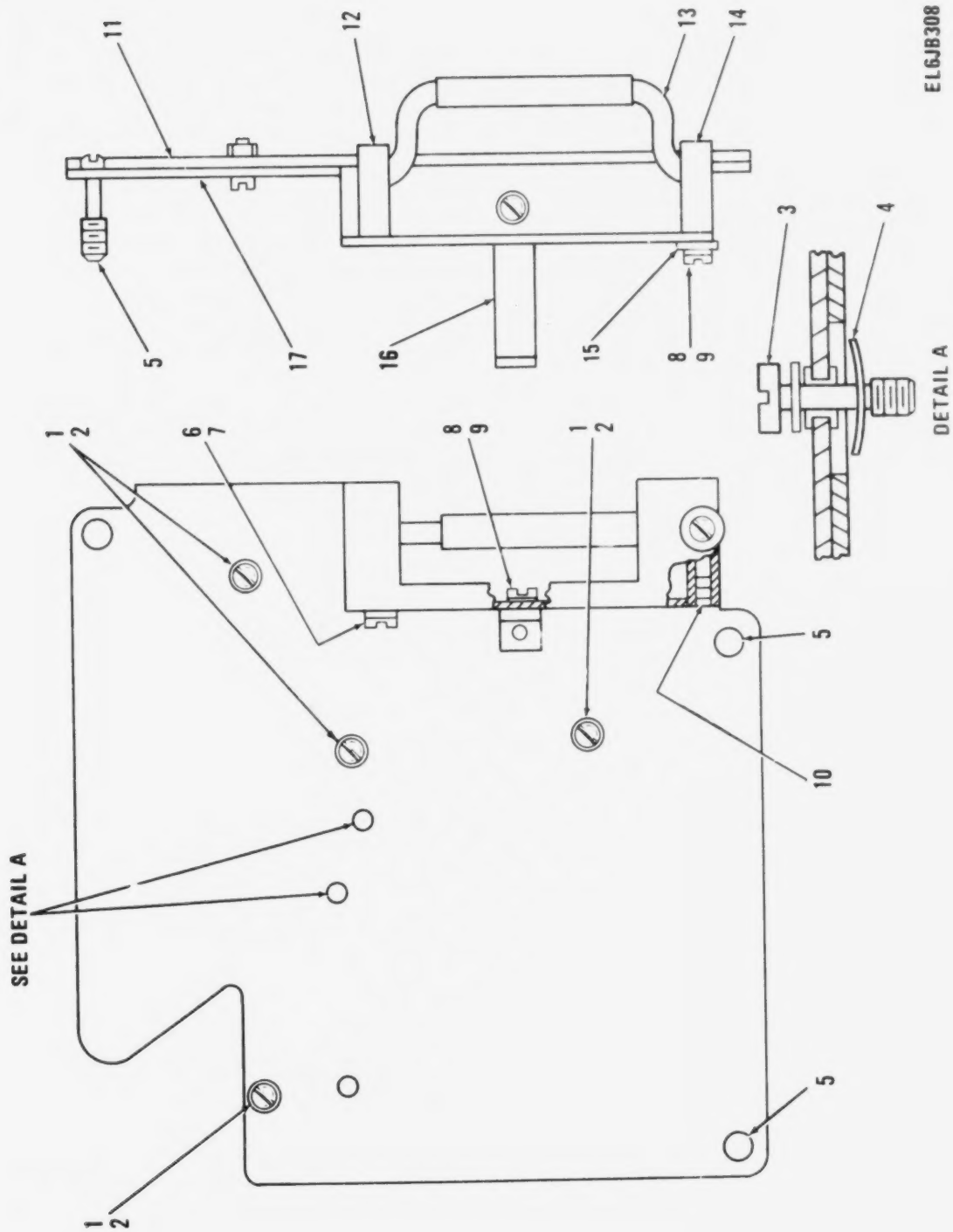

Figure 64. Chassis Assembly, Electrical (Sheet 1 of 2).

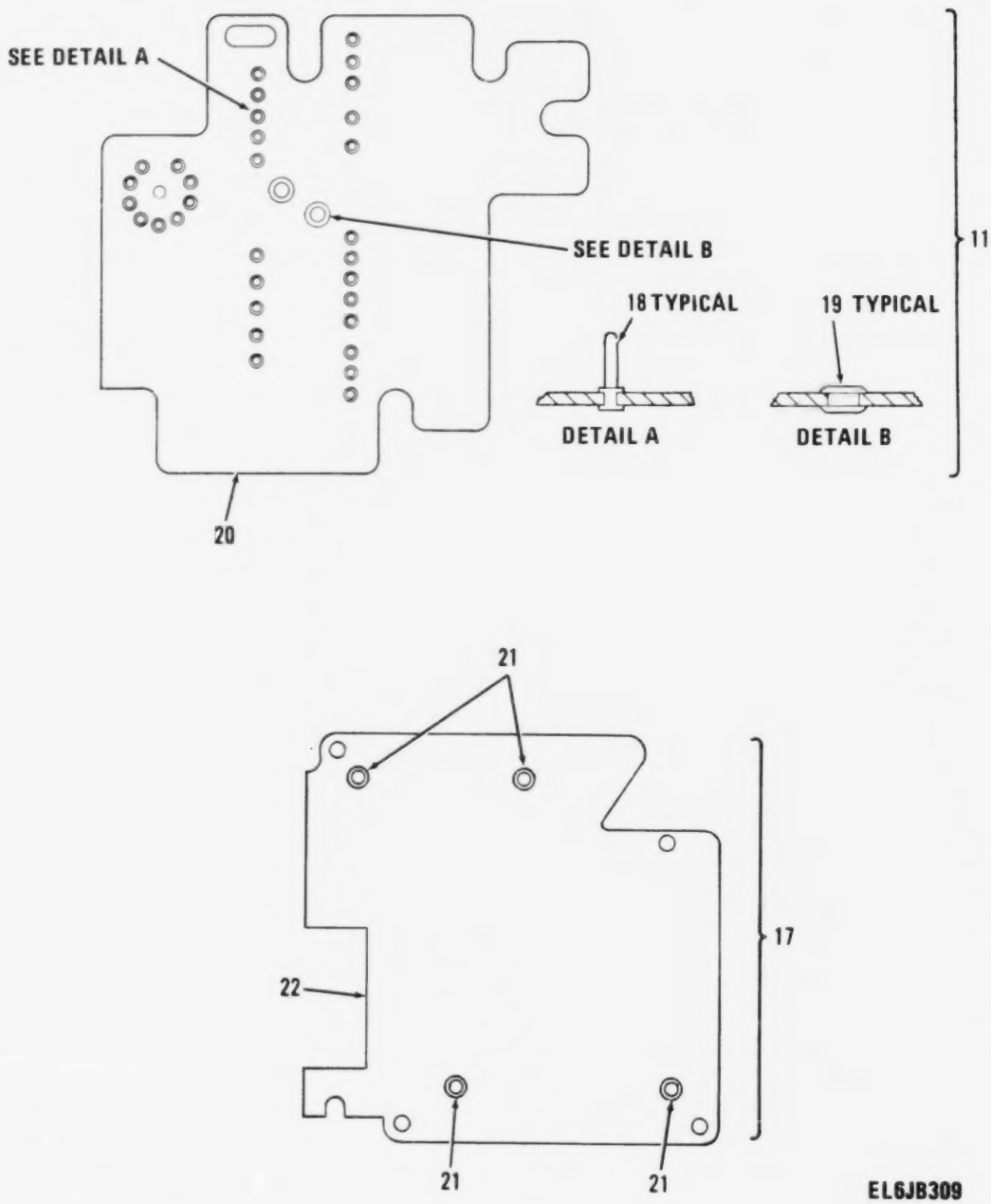

Figure 64. Chassis Assembly, Electrical (Sheet 2 of 2).

(1) ILLUSTRATION (a) FIG NO	(1) ILLUSTRATION (b) ITEM NO	(2) SMR CODE	(3) NATIONAL STOCK NUMBER	(4) FSCM	(5) PART NUMBER	(6) DESCRIPTION / USABLE ON CODE	(7) U/M	(8) QTY INC IN UNIT
						GROUP 010404 CHASSIS ASSY,ELECTRICAL		
						A1 SM-D-413879		
64	1	PAHZZ	5310-01-100-6991	30655	F92-1660-26	NUT,SELF-LOCKING,HE	EA	4
64	2	PAHZZ	5305-00-959-2345	96906	MS35190-211	SCREW,MACHINE	EA	4
64	3	PAFZZ	5305-00-988-5747	83486	43-04-04120CD PL	SCREW,ASSEMBLED WAS	EA	3
64	4	PAFZZ		78553	C-18695SS-012	NUT,SHEET SPRING	EA	2
64	5	PAFZZ	5305-00-853-6362	80063	SM-C-413884-2	SCREW,EXTERNALLY RE	EA	3
64	6	PAHZZ	5305-00-054-5637	96906	MS51957-3	SCREW,MACHINE	EA	1
64	7	PAHZZ	5310-00-543-5060	96906	MS35338-39	WASHER,LOCK	EA	1
64	8	PAHZZ	5305-00-558-4889	96906	MS35223-14	SCREW,MACHINE	EA	1
64	9	PAHZZ	5310-00-543-2410	96906	MS35338-40	WASHER,LOCK	EA	1
64	10	PAHZZ	5305-00-957-6263	96906	MS35190-210	SCREW,MACHINE	EA	1
64	11	PAHZA	5820-00-859-2628	80063	SM-C-413889	PRINTED WIRING BOAR	EA	1
64	12	XBHZZ		80063	SM-C-413881-1	PLATE	EA	1
64	13	XBHZZ		80063	SM-B-413882	HANDLE,BAIL	EA	1
64	14	XBHZZ		80063	SM-C-413881-2	PLATE	EA	1
64	15	PAHZZ	5310-00-951-4679	96906	MS27183-3	WASHER,FLAT	EA	1
64	16	XBFZZ		80063	SM-B-413883	BRACKET	EA	1
64	17	XBHZZ		80063	SM-C-413885	CHASSIS ASSY	EA	1
64	18	XAHZA		80063	SM-B-413546-1	CONTACT	EA	32
64	19	XAHZA		08544	SE54SL PL	EYELET,MTLC	EA	2
64	20	XAHZZ		80063	SM-D-413891	PRINTED CIRCUIT BD	EA	1
64	21	XAHZZ		80063	SM-B-413888	STUD	EA	4
64	22	XAHZZ		80063	SM-D-413887	CHASSIS	EA	1

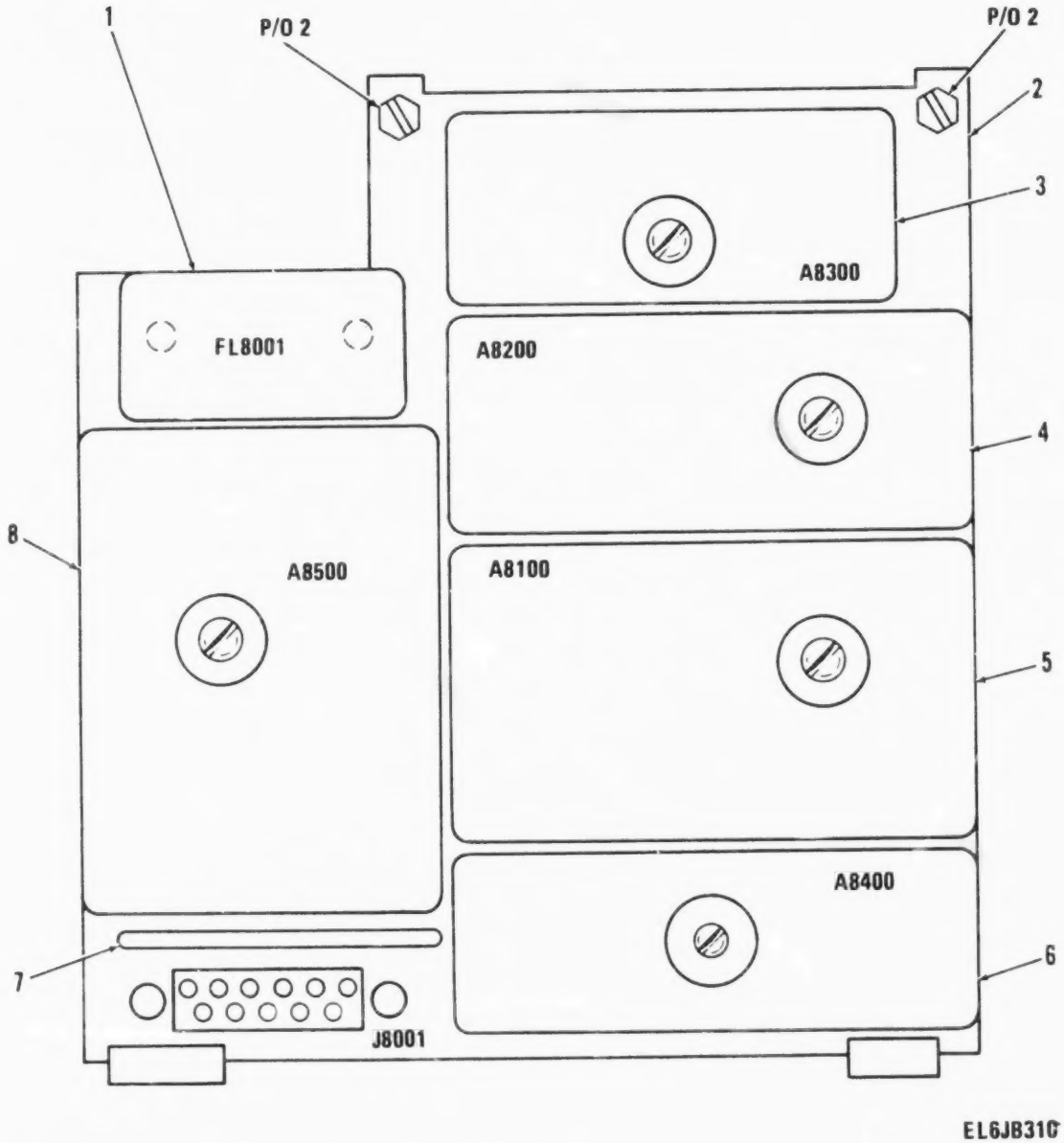

Figure 65. Transmitter Speech Amplifier and Modulator Assembly (Sheet 1 of 3).

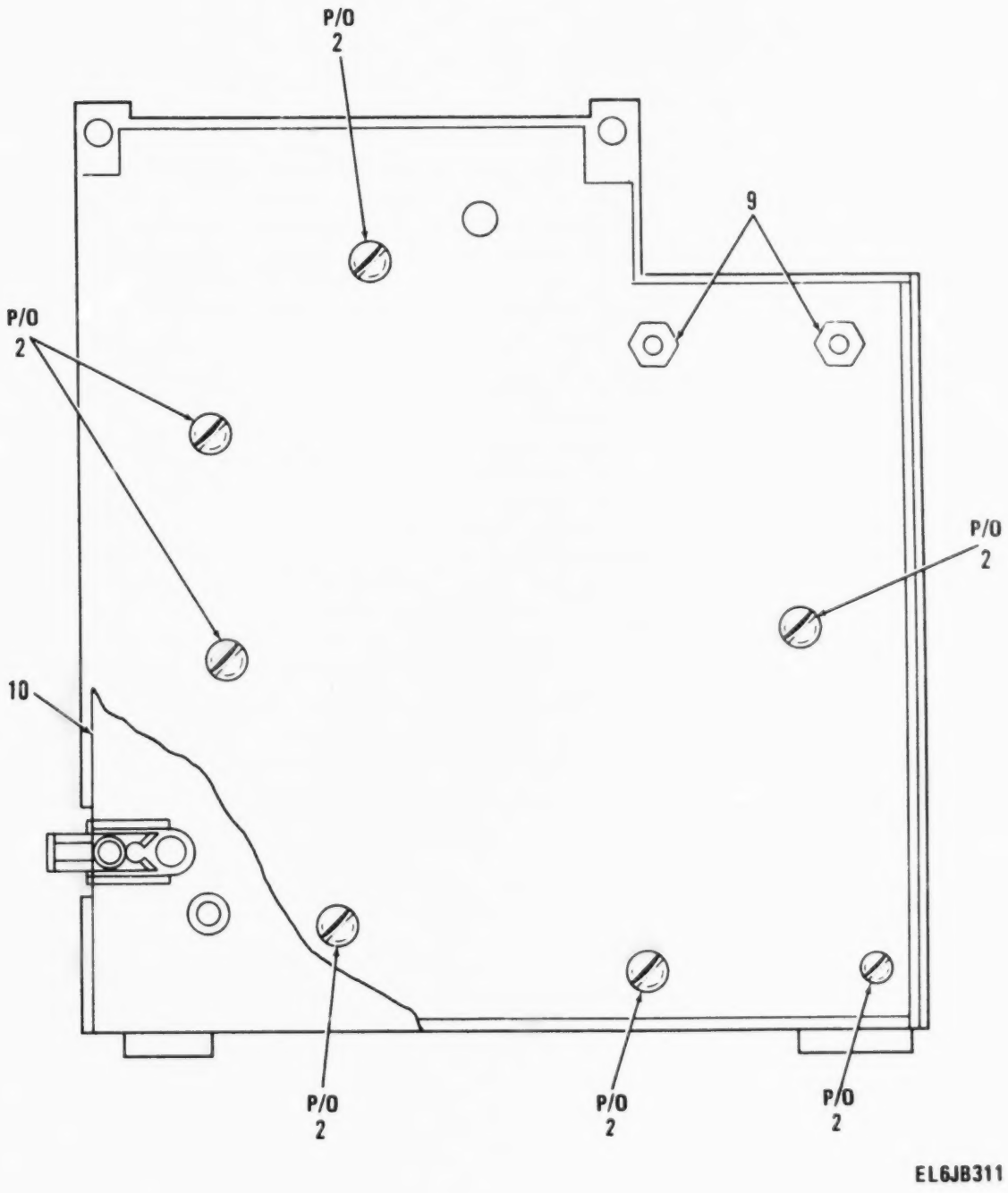

Figure 65. Transmitter Speech Amplifier and Modulator Assembly (Sheet 2 of 3).

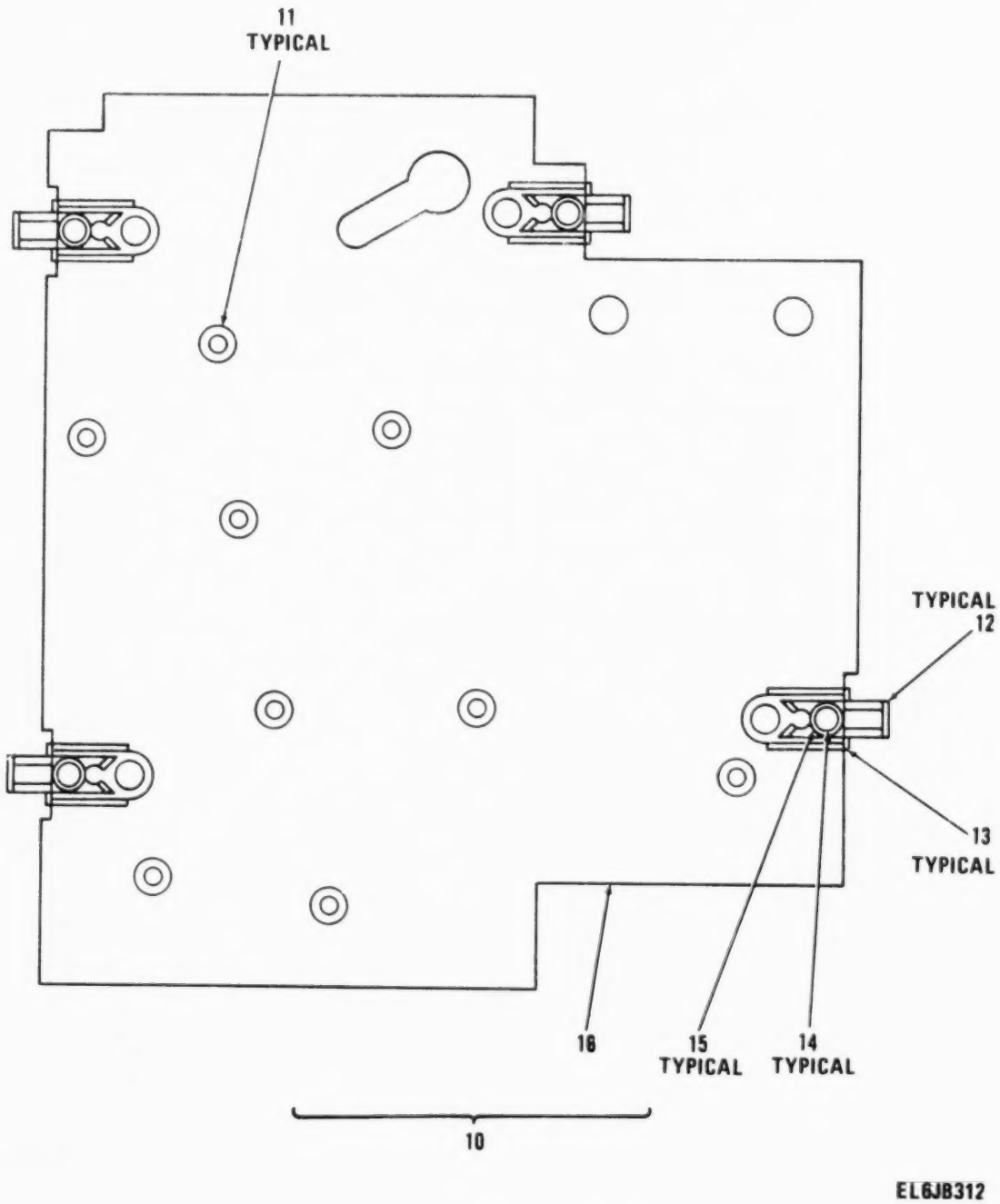

Figure 65. Transmitter Speech Amplifier and Modulator Assembly (Sheet 3 of 3).

(1) ILLUSTRATION (a) FIG NO	(1) ILLUSTRATION (b) ITEM NO	(2) SMR CODE	(3) NATIONAL STOCK NUMBER	(4) FSCM	(5) PART NUMBER	(6) DESCRIPTION USABLE ON CODE	(7) U/M	(8) QTY INC IN UNIT
						GROUP 0105 TRANSMITTER SPEECH AMPLI-FIER AND MODULATOR ASSY A8000 AND A8000A AM-C-414170		
65	1	PAFZZ	5915-00-892-3011	80063	SM-C-414172	FILTER,LOW PASS 50-3000 HZ FREQ RANGE,600 OHMS INPUT AND OUTPUT IMPEDANCE	EA	1
65	2	PAFDD	5820-00-884-9960	80063	SM-C-414276	PRINTED CIRCUIT BOA	EA	1
65	3	PAFDL	5820-00-884-2478	80063	SM-B-414197	ONEGTWO,IF,AMPL,ASY	EA	1
65	4	PAFDZ	5820-00-884-2476	80063	SM-B-414215	DISCRIMINATOR,PHASE	EA	1
65	5	PAFDD	5820-00-884-2479	80063	SM-D-414176	MODULATOR,RADIO TRA	EA	1
65	6	PAFDL	5820-00-884-2475	80063	SM-B-374963	GENERATOR ASSEMBLY	EA	1
65	7	PAFZZ	5910-01-126-4735	71590	YKF007-01L0P	CAPACITOR,FIXED CER EIGHT .0012 UF PLUS 50 MINUS 20 PCT TOL, 75 VDCW	EA	1
65	8	PAFDL	5820-00-884-2477	80063	SM-B-414238	AMPLIFIER,AUDIO FRE	EA	1
65	9	PAFZZ	5310-00-582-9176	30655	F92-1660-40	NUT,SELF-LOCKING,HE	EA	2
65	10	PAFFF	5999-00-823-3249	80063	SM-D-414273	PLATE,ELECTRICAL SH	EA	1
65	11	PAFZZ	3120-00-897-8873	80063	SM-B-413554	BUSHING,SLEEVE	EA	9
65	12	PAFZZ	5325-00-262-9130	88447	38881-L	LATCH,SNAPSLIDE FAS	EA	4
65	13	XAFZZ		88447	38871-G-2	GUIDE	EA	4
65	14	XAFZZ		88447	38901-R	RIVET,TUBULAR	EA	4
65	15	XAFZZ		88447	38891-W	WASHER,SPR TNSN	EA	4
65	16	XBFZZ		80063	SM-D-414275	PLATE,SHIELD	EA	1

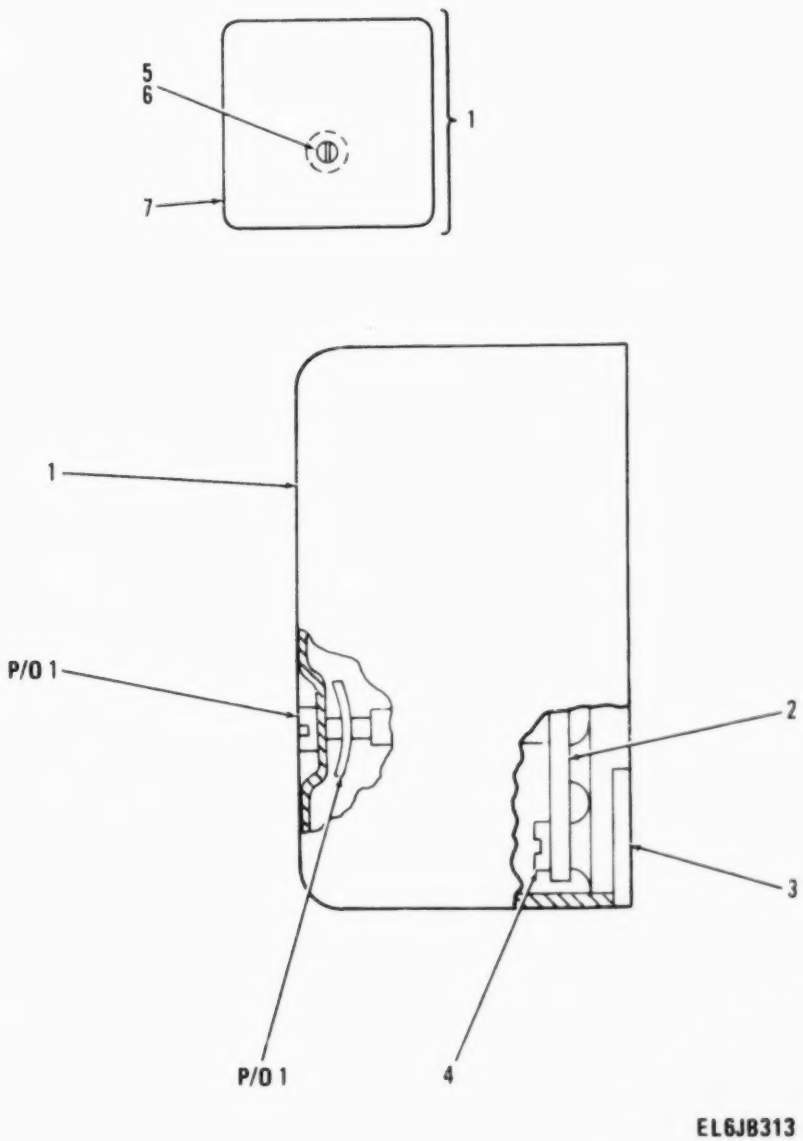

Figure 66. Modulator, Radio XMTR, 11.5 MHz Modulator Assembly.

(1) ILLUSTRATION (a) FIG NO	(b) ITEM NO	(2) SMR CODE	(3) NATIONAL STOCK NUMBER	(4) FSCM	(5) PART NUMBER	(6) DESCRIPTION		
						GROUP 01 [illegible] MODULATOR,RADIO [illegible]		
						[illegible] MHZ MODULATOR [illegible]		
						[illegible] SM-D-414176		
66	1	PAFDD		80063	SM-D-414179	COVER ASSEMBLY.....	[illegible]	[illegible]
66	2	PADDD	5820-00-457-0572	80063	SM-D-414182	MODULATOR,RADIO TRA.....	[illegible]	[illegible]
66	3	XDDZZ		80063	SM-D-414178	BASE.....	[illegible]	[illegible]
66	4	PADZZ	5305-00-855-0962	96906	MS24629-3	SCREW,TAPPING,THREA.....	[illegible]	[illegible]
66	5	PAFZZ		78553	C-1869555-012	NUT,SHEET SPRING.....	[illegible]	[illegible]
66	6	PAFZZ	5305-00-988-5747	83486	43-04-04120CD PL	SCREW,ASSEMBLED WAS.....	[illegible]	[illegible]
66	7	PADZZ		80063	SM-C-414181	COVER.....	[illegible]	[illegible]

LEGEND

REF DES	ITEM NO	REF DES	ITEM NO	REF DES	ITEM NO	REF DES	ITEM NO
CR8101	1	C8107	10	Q8101	15	R8109	25
CR8102	2	C8108	11	Q8102	15	R8110	26
CR8103	2	C8109	11	Q8103	16	R8111	27
CR8104	3	C8110	5	R8101	17	R8112	28
CR8105	3	C8111	5	R8102	18	R8113	23
C8101	4	C8112	10	R8103	19	R8114	29
C8102	5	C8113	5	R8104	20	R8115	29
C8103	6	C8114	12	R8105	21	R8116	30
C8104	7	C8115	12	R8106	22	T8101	31
C8105	8	C8116	13	R8107	23	Y8101	32
C8106	9	L8101	14	R8108	24		

EL6JB314

PREFIX ALL REFERENCE DESIGNATIONS WITH A8000A8100

Figure 67. Modulator, Radio Transmitter (Sheet 1 of 3).

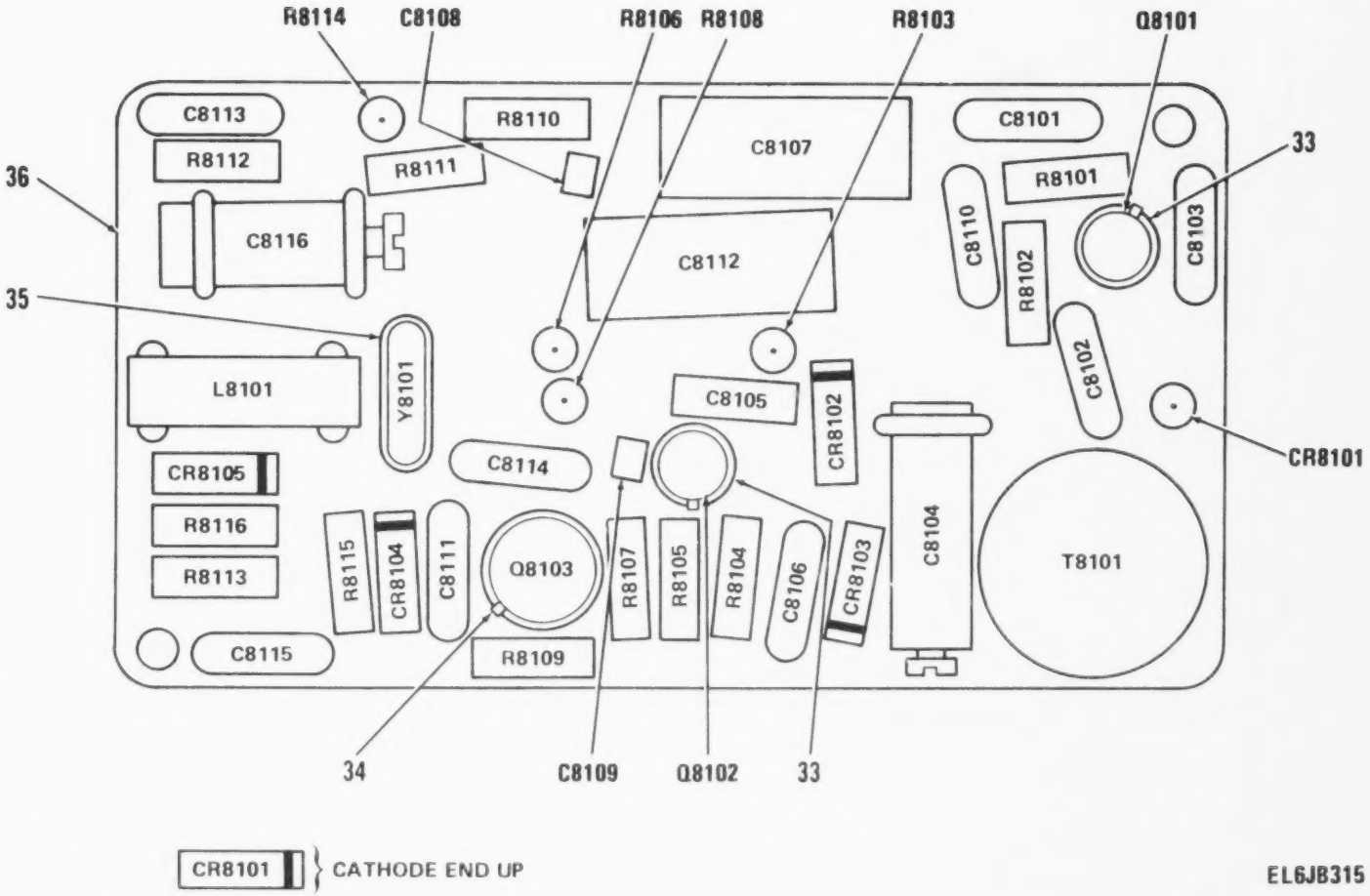

Figure 67. Modulator, Radio Transmitter (Sheet 2 of 3).

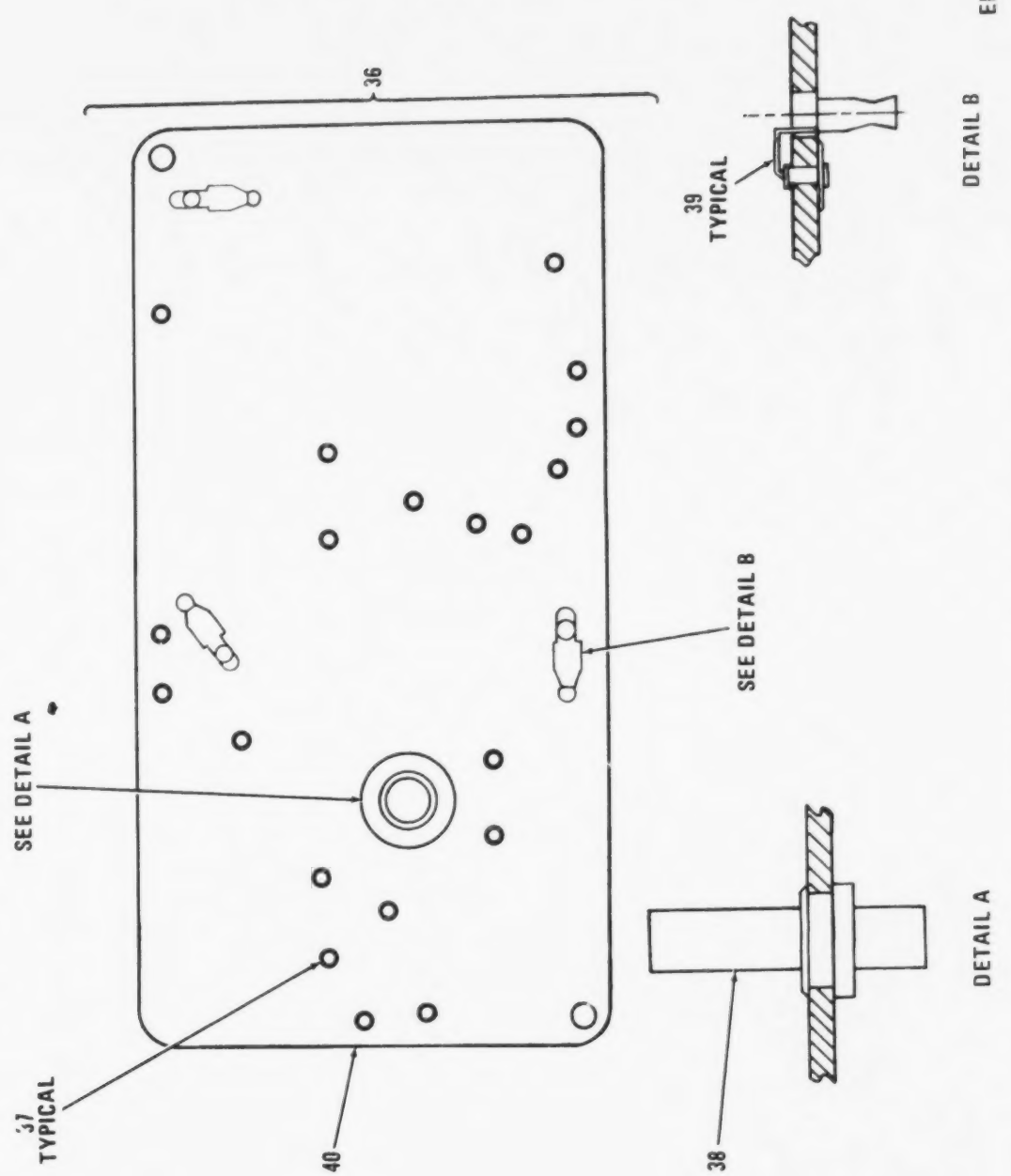

Figure 67. Modulator, Radio Transmitter (Sheet 3 of 3).

(1) ILLUSTRATION (a) FIG NO	(1) ILLUSTRATION (b) ITEM NO	(2) SMR CODE	(3) NATIONAL STOCK NUMBER	(4) FSCM	(5) PART NUMBER	(6) DESCRIPTION / USABLE ON CODE	(7) U/M	(8) QTY INC IN UNIT
						GROUP 01350101 MODULATOR,RADIO TRANSMITTER		
67	1	PADZZ	5961-00-995-2310	81349	JANIN752A	SEMICONDUCTOR DEVIC	EA	1
67	2	XDDZZ		16352	VVC354	SEMICOND DVC,DIODE VR 15 VDC,PD 500 MILLIW	EA	2
67	3	XDDZZ		03877	SM-B-414246	SEMICOND DVC,DIODE	EA	2
67	4	PADZZ	5910-01-031-0447	81349	CMR05F331GODR	CAPACITOR,FIXED,MIC	EA	1
67	5	PADZZ	5910-00-890-0554	80063	SM-C-413567-3	CAPACITOR,FIXED,CER .0047 UF,PORM 20 PCT,100 VDCW	EA	4
67	6	PADZZ	5910-01-029-8906	81349	CMR06F102GODR	CAPACITOR,FIXED,MIC	EA	1
67	7	PADZZ	5910-00-938-1015	81349	PC51H160	CAPACITOR,VARIABLE,	EA	1
67	8	PADZZ	5910-00-805-6628	81349	CC22SH360G	CAPACITOR,FIXED,CER	EA	1
67	9	PADZZ	5910-01-043-5772	81349	CMR05F271GODR	CAPACITOR,FIXED,MIC	EA	1
67	10	PADZZ	5910-00-012-5549	99515	EP-60-7	CAPACITOR,FIXED,PLA .04 UF,PORM 20 PCT,50 VDCW	EA	2
67	11	PADZZ	5910-00-010-8666	81349	M39014/01-1357	CAPACITOR,FIXED,CER	EA	2
67	12	PADZZ	5910-01-044-8564	81349	CMR05F301GODR	CAPACITOR,FIXED,MIC	EA	2
67	13	PADZZ	5910-00-992-3306	81349	PC51J110	CAPACITOR,VARIABLE,	EA	1
67	14	PADZZ		80063	SM-C-414194	REACTOR ASSY 18.8 UH PORM 5 PCT INDUCTANCE	EA	1
67	15	XADZZ		81349	JAN2N499A	TRANSISTOR	EA	2
67	16	XADZZ		81349	JAN2N1142	TRANSISTOR	EA	1
67	17	PADZZ	5905-00-126-6683	81349	RCR07G332JS	RESISTOR,FIXED,COMP	EA	1
67	18	PADZZ	5905-00-135-6046	81349	RCR07G681JS	RESISTOR,FIXED,COMP	EA	1
67	19	PADZZ	5905-00-106-3666	81349	RCR07G103JS	RESISTOR,FIXED,COMP	EA	1
67	20	PADZZ	5905-00-141-1183	81349	RCR07G101JS	RESISTOR,FIXED,COMP	EA	1
67	21	PADZZ	5905-00-131-1255	81349	RCR07G122JS	RESISTOR,FIXED,COMP	EA	1
67	22	PADZZ	5905-00-119-8768	81349	RCR07G821JS	RESISTOR,FIXED,COMP	EA	1
67	23	PADZZ	5905-00-106-1356	81349	RCR07G152JS	RESISTOR,FIXED,COMP	EA	2
67	24	PADZZ	5905-00-141-0744	81349	RCR07G562JS	RESISTOR,FIXED,COMP	EA	1
67	25	PADZZ	5905-00-135-3973	81349	RCR07G221JS	RESISTOR,FIXED,COMP	EA	1
67	26	PADZZ	5905-00-119-3504	81349	RCR07G273JS	RESISTOR,FIXED,COMP	EA	1
67	27	PADZZ	5905-00-114-0710	81349	RCR07G331JS	RESISTOR,FIXED,COMP	EA	1
67	28	PADZZ	5905-00-119-8811	81349	RCR07G151JS	RESISTOR,FIXED,COMP	EA	1
67	29	PADZZ	5905-00-119-3505	81349	RCR07G683JS	RESISTOR,FIXED,COMP	EA	1
67	30	PADZZ	5905-00-141-0717	81349	RCR07G473JS	RESISTOR,FIXED,COMP	EA	1
67	31	PADZZ		80063	SM-C-414189	TRANSFORMER ASSY,RF 2.7 UH PORM .1 UH INDUCTANCE AT 7.90 MHZ PORM 100 KHZ	EA	1
67	32	XDDZZ		75351	ML18E 11.525MHZ	CRYSTAL UNIT 11.525 MHZ PORM .002 PCT FREQ AT 25 DEG C	EA	1
67	33	PADZZ	5970-00-989-8333	07047	A-10042	INSULATOR,DISK	EA	2
67	34	PADZZ	5999-00-752-5321	07047	A-10012	INSULATOR,DISK	EA	1
67	35	XDDZZ		80063	SM-B-414185	PAD,TRANSISTOR	EA	1
67	36	XDDZZ		80063	SM-D-414186	CIRCUIT BOARD ASSY	EA	1
67	37	XDDZZ		70528	453S-060	EYELET,MTLC	EA	23
67	38	XDDZZ		80063	SM-C-413575-1	TERMINAL,STUD	EA	1

(1) ILLUSTRATION (a) FIG NO	(1) ILLUSTRATION (b) ITEM NO	(2) SMR CODE	(3) NATIONAL STOCK NUMBER	(4) FSCM	(5) PART NUMBER	(6) DESCRIPTION USABLE ON CODE	(7) U/M	(8) QTY INC IN UNIT
67	39	XDDZA		80063	SM-C-413574	CONTACT	EA	3
67	40	XDDZZ		80063	SM-D-414188	PRINTED CIRCUIT BD	EA	1

258/(259 BLANK)

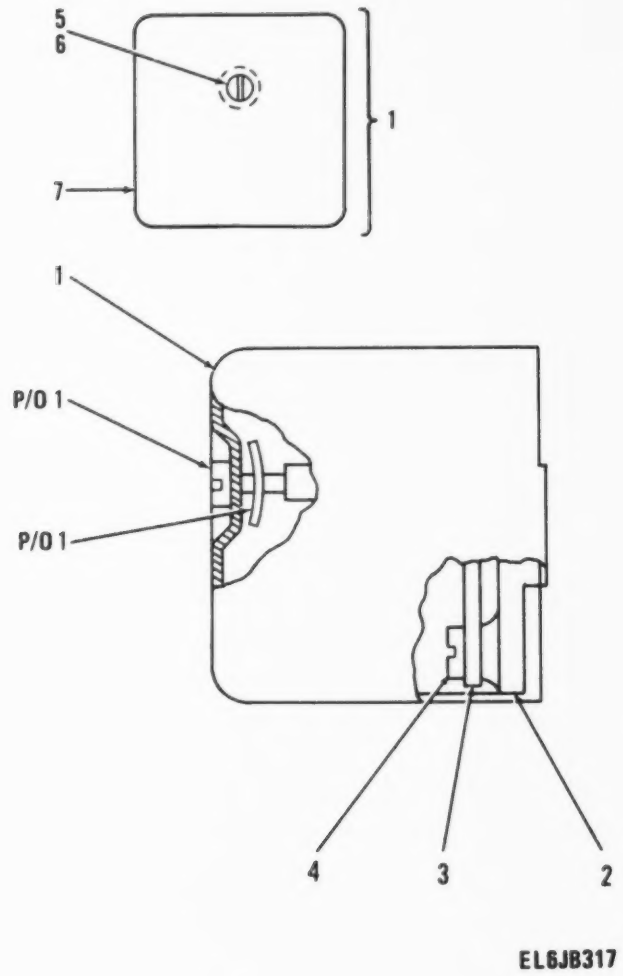

Figure 68. Transmitter Phase Discriminator Assembly.

(1) ILLUSTRATION (a) FIG NO	(1) ILLUSTRATION (b) ITEM NO	(2) SMR CODE	(3) NATIONAL STOCK NUMBER	(4) FSCM	(5) PART NUMBER	(6) DESCRIPTION USABLE ON CODE	(7) U/M	(8) QTY INC IN UNIT
						GROUP 010502 TRANSMITTER PHASE DISCRIMINATOR ASSY A8200 SM-B-414215		
68	1	XDDDL		80063	SM-B-414218	COVER ASSY	EA	1
68	2	XDDZZ		80063	SM-D-414217	BASE	EA	1
68	3	XDDDD		80063	SM-D-414221	FREQUENCY CONT ASSY	EA	1
68	4	PADZZ	5305-00-855-0962	96906	MS24629-3	SCREW,TAPPING,THREA	EA	2
68	5	PADZZ		78553	C-18695SS-012	NUT,SHEET SPRING	EA	1
68	6	PADZZ	5305-00-988-5747	83486	43-04-04120CD PL	SCREW,ASSEMBLED WAS	EA	1
68	7	XDDZZ		80063	SM-C-414220	COVER	EA	1

LEGEND

REF DES	ITEM NO	REF DES	ITEM NO	REF DES	ITEM NO	REF DES	ITEM NO
CR8201	1	C8207	6	Q8202	13	R8209	21
CR8202	1	C8208	7	R8201	14	R8210	22
CR8203	1	C8209	8	R8202	15	R8211	16
C8201	2	C8210	9	R8203	16	R8212	15
C8202	3	C8211	3	R8204	17	R8213	14
C8203	3	C8212	10	R8205	18	T8201	23
C8204	3	L8201	11	R8206	19	T8202	24
C8205	4	L8202	12	R8207	20	T8203	25
C8206	5	Q8201	13	R8208	21	T8204	26

EL6JB318

PREFIX ALL REFERENCE DESIGNATIONS WITH A8000A8200

Figure 69. Frequency Control Assembly (Sheet 1 of 3).

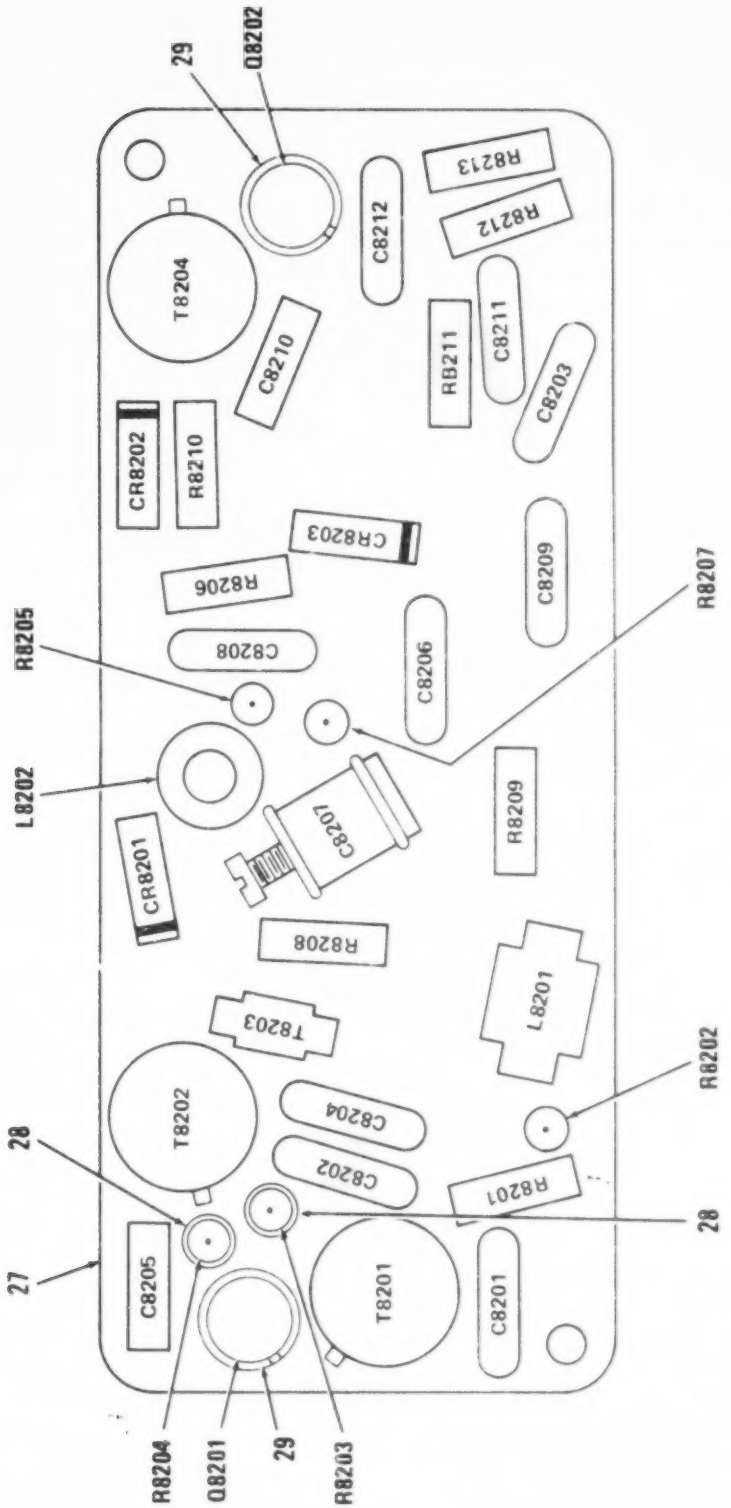

Figure 69. Frequency Control Assembly (Sheet 2 of 3)

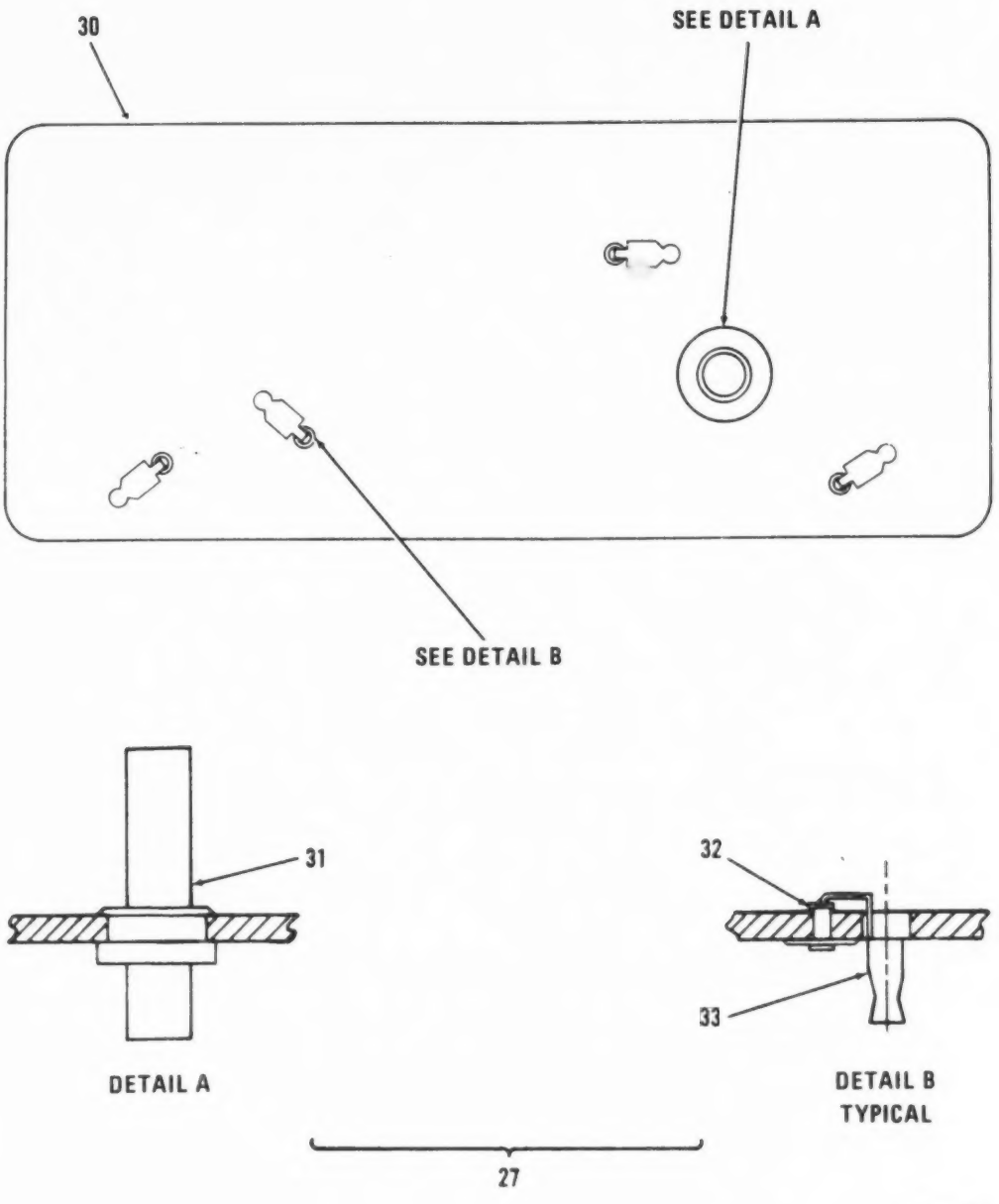

Figure 69. Frequency Control Assembly (Sheet 3 of 3).

(1) ILLUSTRATION (A) FIG NO	(B) ITEM NO	(2) SMR CODE	(3) NATIONAL STOCK NUMBER	(4) FSCM	(5) PART NUMBER	(6) DESCRIPTION USABLE ON CODE	U/M	QTY
						GROUP 02050201 FREQUENCY CONTROL ASSY		
69	1	PADZZ	5961-00-842-9864	81349	JANIN914	SEMICONDUCTOR DEVIC	EA	3
69	2	PADZZ	5910-01-043-5772	81349	CMR05F271G0DR	CAPACITOR,FIXED,MI	EA	1
69	3	XDDZZ		72982	855-511X5S0332M	CAPACITOR,CER DIEL .0033 UF PORM 20 PCT,100 VDCW	EA	4
69	4	PADZZ	5910-00-617-4322	81349	CC22UJ620G	CAPACITOR,FIXED,CER	EA	2
69	5	PADZZ	5910-01-040-1232	81349	CMR06F302G0DR	CAPACITOR,FIXED,MI	EA	1
69	6	PADZZ	5910-00-924-4307	81349	PC51J5R5	CAPACITOR,VARIABLE	EA	1
69	7	PADZZ	5910-01-058-0229	81349	CMR06F162G0DR	CAPACITOR,FIXED,MI	EA	1
69	8	PADZZ	5910-01-043-6891	81349	CMR05E300G0DR	CAPACITOR,FIXED,MI	EA	1
69	9	PADZZ	5910-00-061-6668	81349	CC22SH7R0K	CAPACITOR,FIXED,CER	EA	1
69	10	PADZZ	5910-01-031-0447	81349	CMR05F331G0DR	CAPACITOR,FIXED,MI	EA	1
69	11	PADZZ	5950-00-891-9158	80063	SM-C-413577	COIL,RADIO,FREQUEN 1 MILLIH INDUCTANCE,PORM 10 PCT	EA	1
69	12	XADZZ		80063	SM-C-414605	COIL ASSY CP 2.8 TO 5.6 UUF,RP 40 TO 200 OHMS AT 11.5 MHZ PORM 580 HZ	EA	1
69	13	XADZZ		80063	SM-C-374842	TRANSISTOR	EA	2
69	14	PADZZ	5905-00-135-3974	81349	RCR07G431JS	RESISTOR,FIXED,COMP	EA	2
69	15	PADZZ	5905-00-131-1255	81349	RCR07G122JS	RESISTOR,FIXED,COMP	EA	2
69	16	PADZZ	5905-00-106-3666	81349	RCR07G103JS	RESISTOR,FIXED,COMP	EA	2
69	17	PADZZ	5905-00-110-7622	81349	RCR07G682JS	RESISTOR,FIXED,COMP	EA	1
69	18	PADZZ	5905-00-141-0717	81349	RCR07G473JS	RESISTOR,FIXED,COMP	EA	1
69	19	PADZZ	5905-00-119-3505	81349	RCR07G683JS	RESISTOR,FIXED,COMP	EA	1
69	20	PADZZ	5905-00-105-7764	81349	RCR07G222JS	RESISTOR,FIXED,COMP	EA	1
69	21	PADZZ	5905-01-024-0806	81349	RLR20C8252FR	RESISTOR,FIXED,FILM	EA	2
69	22	PADZZ	5905-00-104-8358	81349	RCR07G822JS	RESISTOR,FIXED,COMP	EA	1
69	23	PADZZ		80063	SM-D-414231	TRANSFORMER,RADIO F	EA	1
69	24	PADZZ	5950-01-011-3195	80063	SM-D-414233	TRANSFORMER,RADIO F	EA	1
69	25	XDDZZ		80063	SM-C-414228	TRANSFORMER ASSY,RF 31 UH,PORM 1.8 UH INDUCTANCE AT 2.5 MHZ PORM 130 HZ	EA	1
69	26	PADZZ	5950-01-014-7908	80063	SM-D-414235	TRANSFORMER,RADIO F	EA	1
69	27	XDDZZ		80063	SM-C-414225	CIRCUIT BOARD ASSY	EA	1
69	28	XDDZZ	5340-01-104-7017	80063	SM-B-447252	SPACER,SPECIAL	EA	2
69	29	PADZZ	5970-00-989-8333	07047	A-10062	INSULATOR,DISK	EA	2
69	30	XDDZZ		80063	SM-D-414227	PRINTED CIRCUIT BD	EA	1
69	31	XDDZZ		80063	SM-C-413575-1	TERMINAL,STUD	EA	1
69	32	XDDZZ		70528	4535-060	EYELET,MTLC	EA	4
69	33	XDDZA		80063	SM-C-413574	CONTACT	EA	4

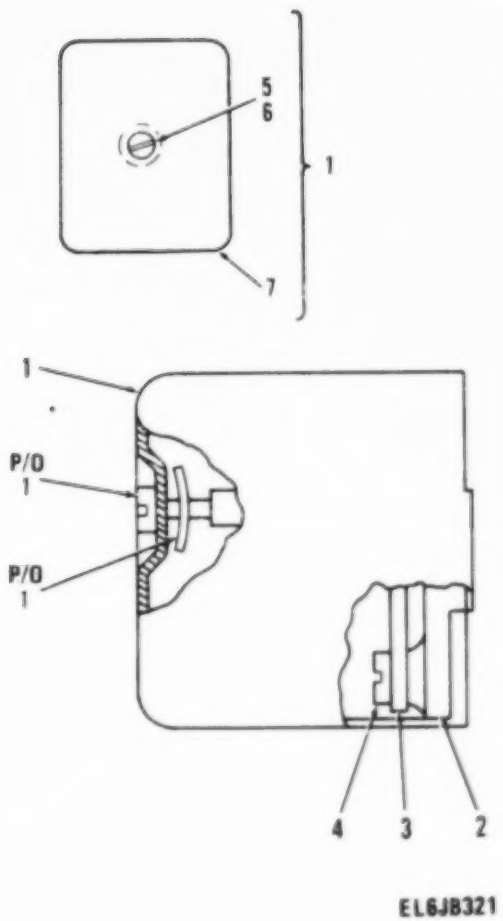

Figure 70. Transmitter, IF, 1st. and 2nd. IF Amplifier Assembly.

(1) ILLUSTRATION		(2)	(3)	(4)	(5)	(6)	(7)
(a) FIG NO	(b) ITEM NO	SMR CODE	NATIONAL STOCK NUMBER	FSCM	PART NUMBER	DESCRIPTION	[illegible]
						GROUP [illegible] TRANSMITTER IF 1ST AND 2ND IF AMPLIFIER ASSY: [illegible] SM-D-414197	
70	1	XDOOL		80063	SM-D-414201	COVER ASSY.	[illegible]
70	2	XDOZZ		80063	SM-C-414199	BASE.	[illegible]
70	3	XDODA		80063	SM-D-414207	AMPLIFIER ASSY.	[illegible]
70	5	XADZZ		70520	4531-060	EYELET,HOLE	[illegible]
70	6	PADZZ	5305-00-988-5767	93406	45-06-0412060 PL	SCREW,ASSEMBLED WAS	[illegible]
70	7	XDOZZ		80063	SM-C-414202	COVER.	[illegible]

LEGEND

REF DES	ITEM NO	REF DES	ITEM NO	REF DES	ITEM NO	REF DES	ITEM NO
C8301	1	C8308	3	R8302	8	R8308	8
C8302	2	C8309	4	R8303	9	R8309	12
C8303	2	J8301	5	R8304	10	T8301	13
C8304	2	Q8301	6	R8305	11	T8302	14
C8306	2	Q8302	6	R8306	9	T8303	15
C8307	2	R8301	7	R8307	8		

EL6JB322

PREFIX ALL REFERENCE DESIGNATIONS WITH A8000A8300

Figure 71. Amplifier Assembly (Sheet 1 of 3).

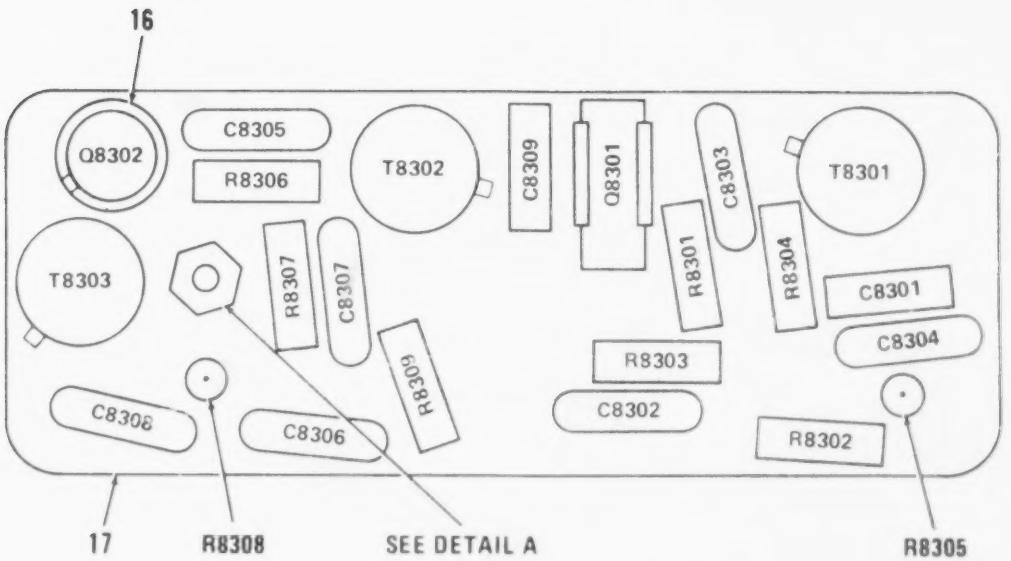

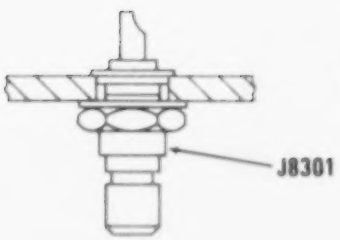

DETAIL A

PREFIX ALL REFERENCE DESIGNATIONS WITH A8000A8300

EL6J8323

Figure 71. Amplifier Assembly (Sheet 2 of 3).

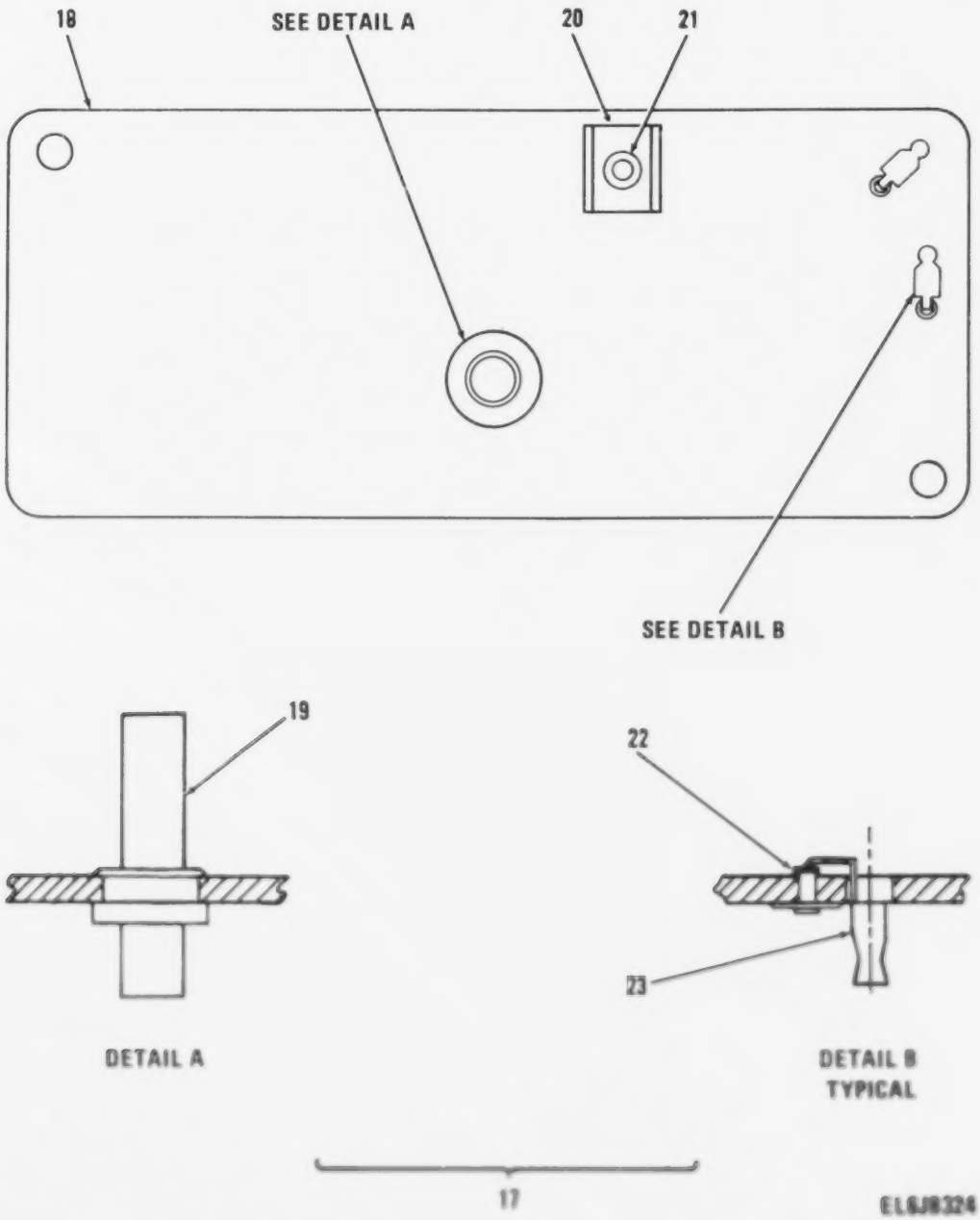

Figure 71. Amplifier Assembly (Sheet 3 of 3).

(1) ILLUSTRATION (a) FIG NO	(1) ILLUSTRATION (b) ITEM NO	(2) SMR CODE	(3) NATIONAL STOCK NUMBER	(4) FSCM	(5) PART NUMBER	(6) DESCRIPTION / USABLE ON CODE	(7) U/M	(8) QTY INC IN UNIT
						GROUP 01050301 AMPLIFIER ASSY		
71	1	PADZZ	5910-00-805-6636	81349	CC22UK1R0C	CAPACITOR,FIXED,CER	EA	1
71	2	PADZZ	5910-00-857-5305	18796	855-222A550-103M	CAPACITOR,FIXED,CER .01 UF,PERM 20 PCT,100 VDCW	EA	6
71	3	PADZZ	5910-01-038-5395	81349	CMR05F391GODR	CAPACITOR,FIXED,MIC	EA	1
71	4	PADZZ	5910-00-061-7043	81349	CC22UJ100C	CAPACITOR,FIXED,CER	EA	1
71	5	PADZA		80063	SM-C-374822-1	CONNECTOR,RECEPTACL 50 OHMS NOMINAL IMPEDANCE	EA	1
71	6	PADZZ	5961-00-911-6115	81349	JAN2N3251A	TRANSISTOR	EA	2
71	7	PADZZ	5905-00-106-3666	81349	RCR07G103JS	RESISTOR,FIXED,COMP	EA	1
71	8	PADZZ	5905-00-114-5343	81349	RCR07G182JS	RESISTOR,FIXED,COMP	EA	3
71	9	PADZZ	5905-00-104-8358	81349	RCR07G822JS	RESISTOR,FIXED,COMP	EA	2
71	10	PADZZ	5905-00-141-0744	81349	RCR07G562JS	RESISTOR,FIXED,COMP	EA	1
71	11	PADZZ	5905-00-110-7620	81349	RCR07G102JS	RESISTOR,FIXED,COMP	EA	1
71	12	PADZZ	5905-00-119-8768	81349	RCR07G821JS	RESISTOR,FIXED,COMP	EA	1
71	13	PADZZ	5950-01-011-5529	80063	SM-D-414212	TRANSFORMER,RADIO F	EA	1
71	14	PADZZ		80063	SM-D-414210	TRANSFORMER,RADIO F	EA	1
71	15	XDDZZ	5950-01-011-3193	80063	SM-D-414208	TRANSFORMER,RADIO F	EA	1
71	16	PADZZ	5970-00-989-8333	07047	A-10042	INSULATOR,DISK	EA	2
71	17	XDDZZ		80063	SM-C-414205	CIRCUIT BOARD ASSY	EA	1
71	18	XDDZZ		80063	SM-D-414207	PRINTED CIRCUIT BD	EA	1
71	19	XDDZZ		80063	SM-C-413575-1	TERMINAL,STUD	EA	1
71	20	XDDZZ		01801	100-225-1-2	HOLDER	EA	1
71	21	XDDZZ		08544	SE245L PL	EYELET,MTLC	EA	1
71	22	XDDZZ		70528	4535-060	EYELET,MTLC	EA	2
71	23	XDDZA		80063	SM-C-413574	CONTACT	EA	2

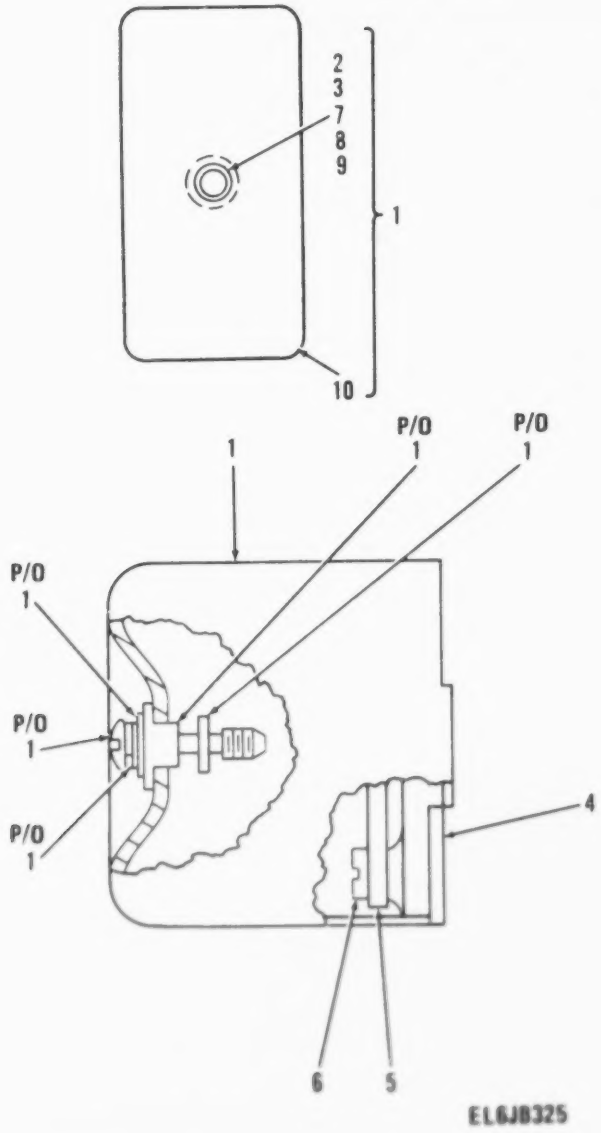

Figure 72. Generator, Reference Signal, Hunt Generator.

(1) ILLUSTRATION (a) FIG NO	(1) ILLUSTRATION (b) ITEM NO	(2) SMR CODE	(3) NATIONAL STOCK NUMBER	(4) FSCM	(5) PART NUMBER	(6) DESCRIPTION / USABLE ON CODE	(7) U/M	(8) QTY INC IN UNIT
						GROUP 010504 GENERATOR REF SIGNAL		
						(HUNT GENERATOR) A8400 AND		
72	1	XDDDL		80063	SM-B-414257	COVER ASSEMBLY	EA	1
72	2	XDDZZ		80063	SM-B-414260	BUSHING,SLEEVE	EA	1
72	3	XDDZZ		79136	5555G-7	RING,RETAINING	EA	1
72	4	XDDZZ		80063	SM-D-414256	BASE	EA	1
72	5	XDDDD		80063	SM-D-374978	FREQUENCY CONT ASSY	EA	1
72	6	PADZZ	5305-00-855-0962	96906	MS24629-3	SCREW,TAPPING,THREA	EA	2
72	7	PADZZ	5310-00-543-5060	96906	MS35338-39	WASHER,LOCK	EA	1
72	8	XDDZZ		80063	SM-C-413531-1	SCREW,EXT REL	EA	1
72	9	PADZZ	5310-00-087-0057	96906	MS15795-2	WASHER,FLAT	EA	1
72	10	XDDZZ		80063	SM-C-414259	COVER	EA	1

LEGEND

REF DES	ITEM NO	REF DES	ITEM NO	REF DES	ITEM NO	REF DES	ITEM NO
C8401	1	C8408	7	R8401	12	R8407	18
C8402	2	C8409	8	R8402	13	R8408	15
C8403	1	L8401	9	R8403	14	R8409	19
C8404	3	Q8401	10	R8404	15	R8410	20
C8405	4	Q8402	11	R8405	16	R8411	21
C8406	5	Q8403	10	R8406	17	T8401	22
C8407	6						

EL6JB326

PREFIX ALL REFERENCE DESIGNATIONS WITH A8000A8400

Figure 7). Frequency Control Assembly (Sheet 1 of 3).

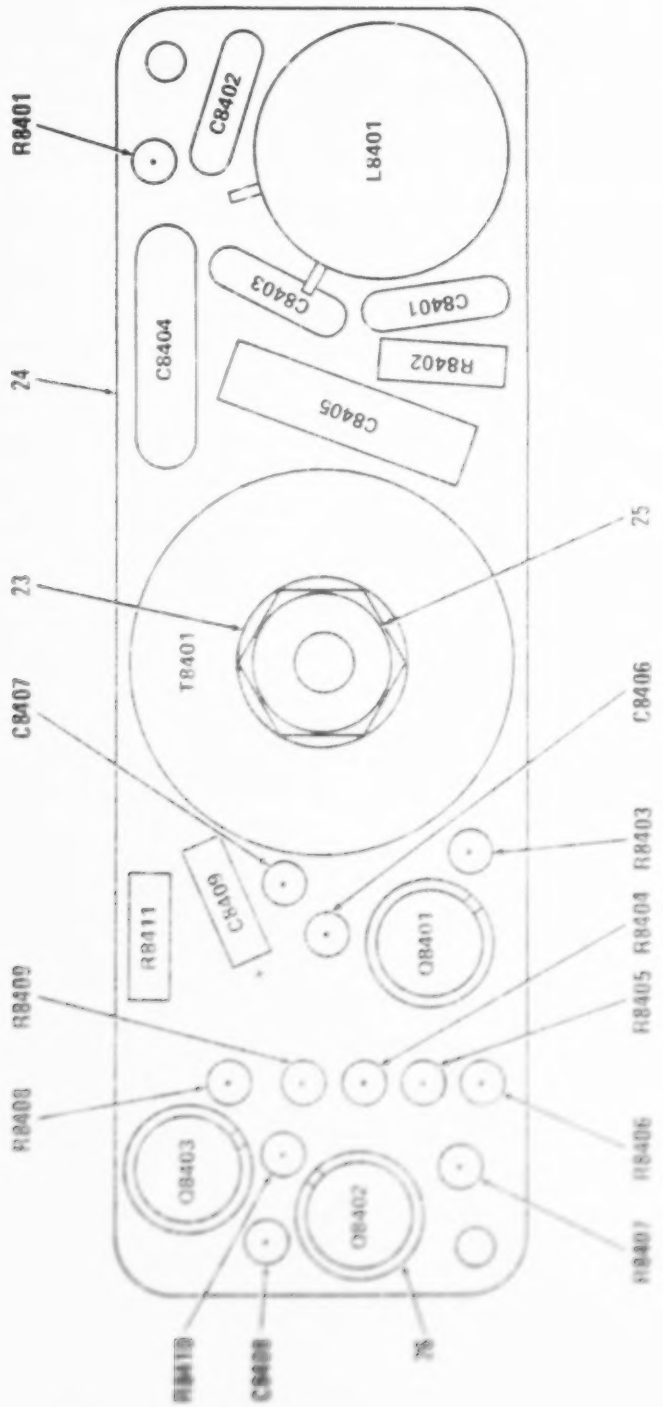

Figure 73. Frequency Control Assembly (Sheet 2 of 3).

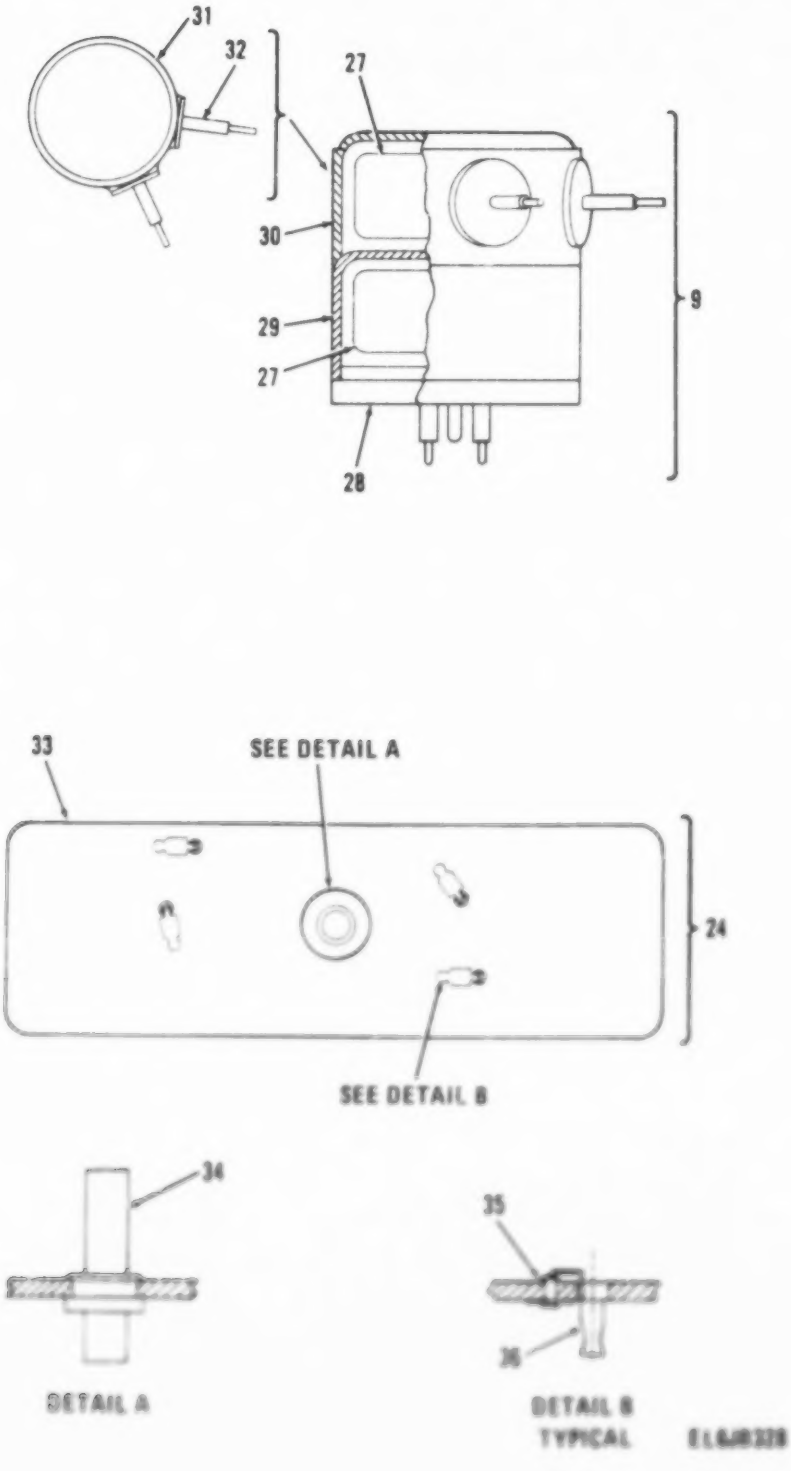

Figure 73. Frequency Control Assembly (Sheet 3 of 3).

(1) ILLUSTRATION (a) FIG NO	(b) ITEM NO	(2) SMR CODE	(3) NATIONAL STOCK NUMBER	(4) FSCM	(5) PART NUMBER	(6) DESCRIPTION USABLE ON CODE	(7) U/M	(8) QTY INC IN UNIT
						GROUP 01050401 FREQUENCY CONTROL ASSY		
73	1	PADZZ	5910-01-053-6833	81349	CMR05C100D0DR	CAPACITOR,FIXED,MIC	EA	2
73	2	PADZZ	5910-01-030-1771	81349	CMR05E200J0DR	CAPACITOR,FIXED,MIC	EA	1
73	3	PADZZ	5910-01-040-1232	81349	CMR06F302G0DR	CAPACITOR,FIXED,MIC	EA	1
73	4	PADZZ	5910-00-967-5702	99515	HEI-104E	CAPACITOR,FIXED,PLA 0.1 UF,PORM 20 PCT,50 VDCW	EA	1
73	5	PADZZ	5910-00-113-5475	81349	M39003/01-3006	CAPACITOR,FIXED,ELE	EA	1
73	6	PADZZ	5910-00-495-0062	81349	M39003/01-3076	CAPACITOR,FIXED,ELE	EA	1
73	7	PADZZ	5910-00-254-3169	81349	M39003/01-3073	CAPACITOR,FIXED,ELE	EA	1
73	8	PADZZ	5910-00-455-4304	81349	M39003/01-3067	CAPACITOR,FIXED,ELE	EA	1
73	9	XDDZZ		80063	SM-C-414266	REACTOR ASSY 191 UH,PORM 9 UH EACH COIL,50 VDCW	EA	1
73	10	XADZZ		81349	JAN2N335	TRANSISTOR	EA	2
73	11	XADZZ		80063	SM-D-376972	TRANSISTOR	EA	1
73	12	PADZZ	5905-00-105-7766	81349	RCR07G222JS	RESISTOR,FIXED,COMP	EA	1
73	13	PADZZ	5905-00-115-3562	81349	RCR07G394JS	RESISTOR,FIXED,COMP	EA	1
73	14	PADZZ	5905-00-114-0711	81349	RCR07G472JS	RESISTOR,FIXED,COMP	EA	1
73	15	PADZZ	5905-00-141-0717	81349	RCR07G473JS	RESISTOR,FIXED,COMP	EA	2
73	16	PADZZ	5905-00-104-8356	81349	RCR07G682JS	RESISTOR,FIXED,COMP	EA	1
73	17	PADZZ	5905-00-136-8405	81349	RCR07G131JS	RESISTOR,FIXED,COMP	EA	1
73	18	PADZZ	5905-00-106-1356	81349	RCR07G152JS	RESISTOR,FIXED,COMP	EA	1
73	19	PADZZ	5905-00-220-5506	81349	RCR07G822JS	RESISTOR,FIXED,COMP	EA	1
73	20	PADZZ	5905-00-110-7620	81349	RCR07G102JS	RESISTOR,FIXED,COMP	EA	1
73	21	PADZZ	5905-00-105-7765	81349	RCR07G224JS	RESISTOR,FIXED,COMP	EA	1
73	22	XADZZ		80045	[illegible]	TRANSFORMER,AUDIO [illegible] SECONDARY	EA	1
73	23	PADZZ	5310-00-167-0833	88044	AN960-8L	WASHER,FLAT	EA	4
73	24	XDDZZ		80063	SM-D-376976	CIRCUIT BOARD ASSY	EA	1
73	25	PADZZ	5310-00-[illegible]	96906	MS25082-2	NUT,PLAIN,HEXAGON	EA	1
73	26	PADZZ	5975-00-[illegible]	[illegible]	[illegible]	INSULATOR,DISK	EA	1
73	27	XDDZZ		80063	SM-C-414268	REACTOR 191 UH,PORM 9 UH [illegible]	EA	1
73	28	XDDZZ		80063	SM-E-[illegible]	HEADER	EA	1
73	29	XDDZZ		80063	SM-C-414271-2	COVER	EA	1
73	30	XDDZZ		80063	SM-D-414269	COVER ASSY	EA	1
73	31	XDDZZ		80063	SM-C-414271-1	COVER	EA	1
73	32	XDDZZ		[illegible]	[illegible]	INSULATOR	EA	2
73	33	XDDZZ		80063	SM-D-376975	PRINTED CIRCUIT BOARD	EA	1
73	34	XDDZZ		80063	SM-C-[illegible]	POST	EA	1
73	35	XDDZZ		[illegible]	[illegible]	INSERT,[illegible]	EA	[illegible]
73	36	XDDZZ		80063	SM-C-[illegible]	CONTACT	EA	[illegible]

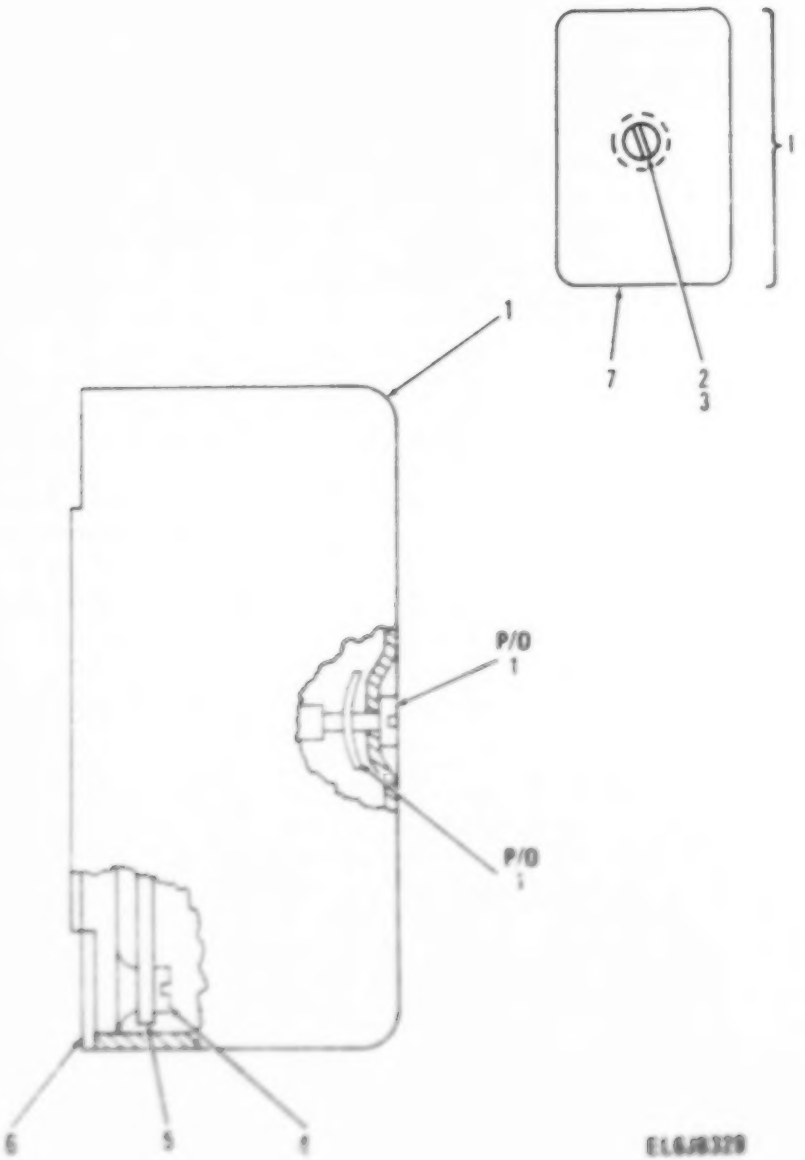

Figure 74. Transmitter Speech Amplifier Assembly.

(1) ILLUSTRATION (A) FIG NO	(1) ILLUSTRATION (B) ITEM NO	(2) SMR CODE	(3) NATIONAL STOCK NUMBER	(4) FSCM	(5) PART NUMBER	(6) DESCRIPTION / USABLE ON CODE	(7) UM	(8) QTY INC IN UNIT
						GROUP 010505 TRANSMITTER SPEECH AMPLIFIER ASSY A8500 SR-B-414230		
74	1	XBFFF		80063	SR-B-414241	COVER ASSY	EA	1
74	2	PAFZZ	5305-00-988-5747	83486	63-04-04120CD PL	SCREW,ASSEMBLED WAS	EA	1
74	3	PAFZZ		78553	C-1869555-012	NUT,SHEET SPRING	EA	1
74	4	PADZZ	5305-00-855-0962	96906	MS24629-3	SCREW,TAPPING,THREA	EA	4
74	5	XDDDD		80063	SR-D-414244	AMPLIFIER ASSY,AF	EA	1
74	6	XDDZZ		80063	SR-D-414240	BASE	EA	1
74	7	XBFZZ		80063	SR-C-414243	COVER	EA	1

LEGEND

REF DES	ITEM NO	REF DES	ITEM NO	REF DES	ITEM NO	REF DES	ITEM NO
CR8501	1	C8508	9	R8502	18	R8513	25
CR8502	2	C8509	10	R8503	19	R8514	26
CR8503	2	C8510	10	R8504	20	R8515	27
CR8504	3	C8511	5	R8505	21	R8516	27
CR8505	4	C8512	11	R8506	22	R8517	28
C8501	5	C8513	12	R8507	23	R8518	23
C8502	6	L8501	13	R8508	19	R8519	29
C8503	5	Q8501	14	R8509	20	R8520	29
C8504	7	Q8502	15	R8510	19	R8521	30
C8505	5	Q8503	16	R8511	21	R8522	31
C8506	7	Q8504	14	R8512	24	T8501	32
C8507	8	R8501	17				

EL6JB330

PREFIX ALL REFERENCE DESIGNATIONS WITH A8000A8500

Figure 75. Amplifier Assembly, Audio Frequency (Sheet 1 of 3).

best copy available

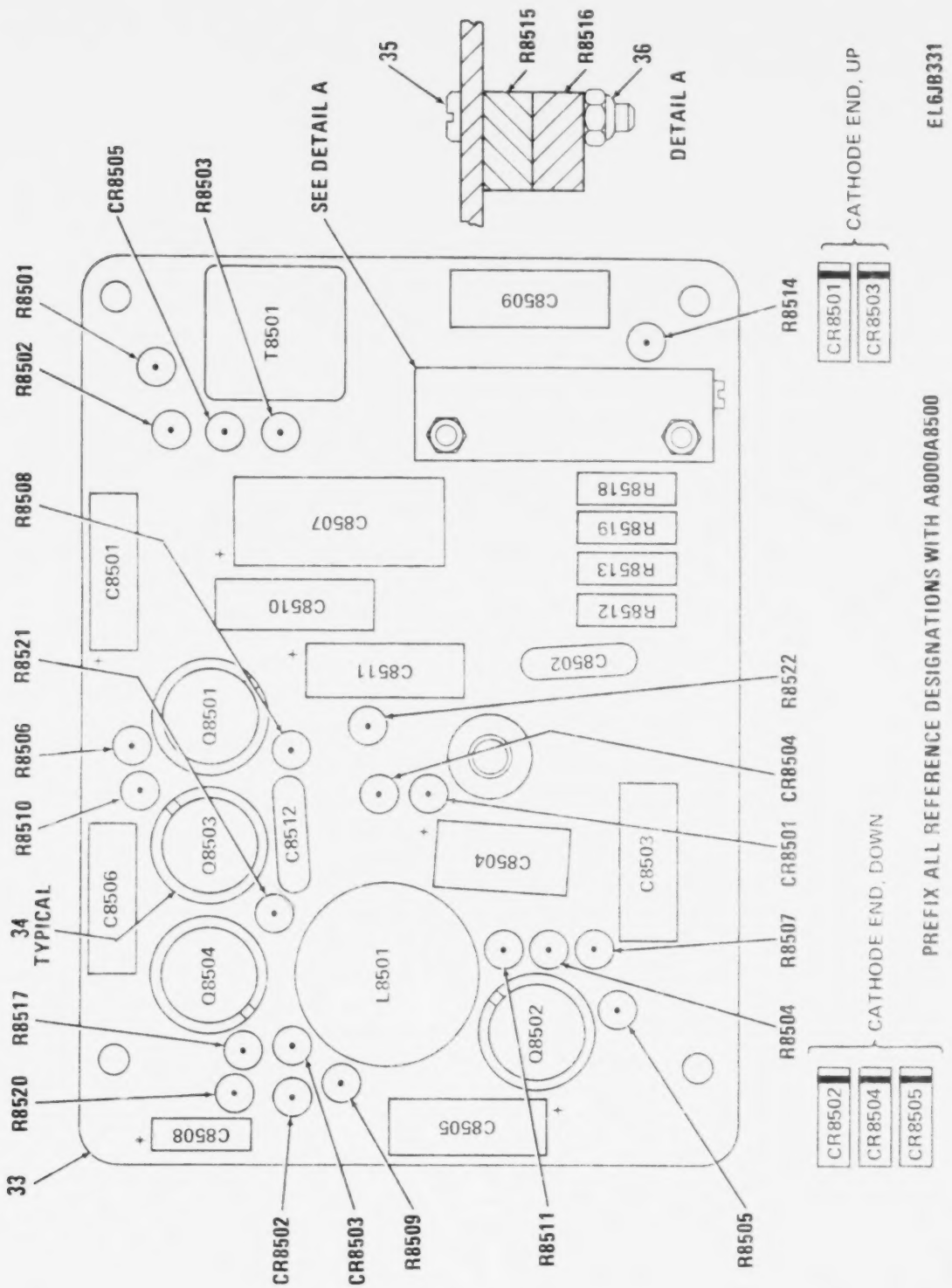

Figure 75. Amplifier Assembly, Audio Frequency (Sheet 2 of 3).

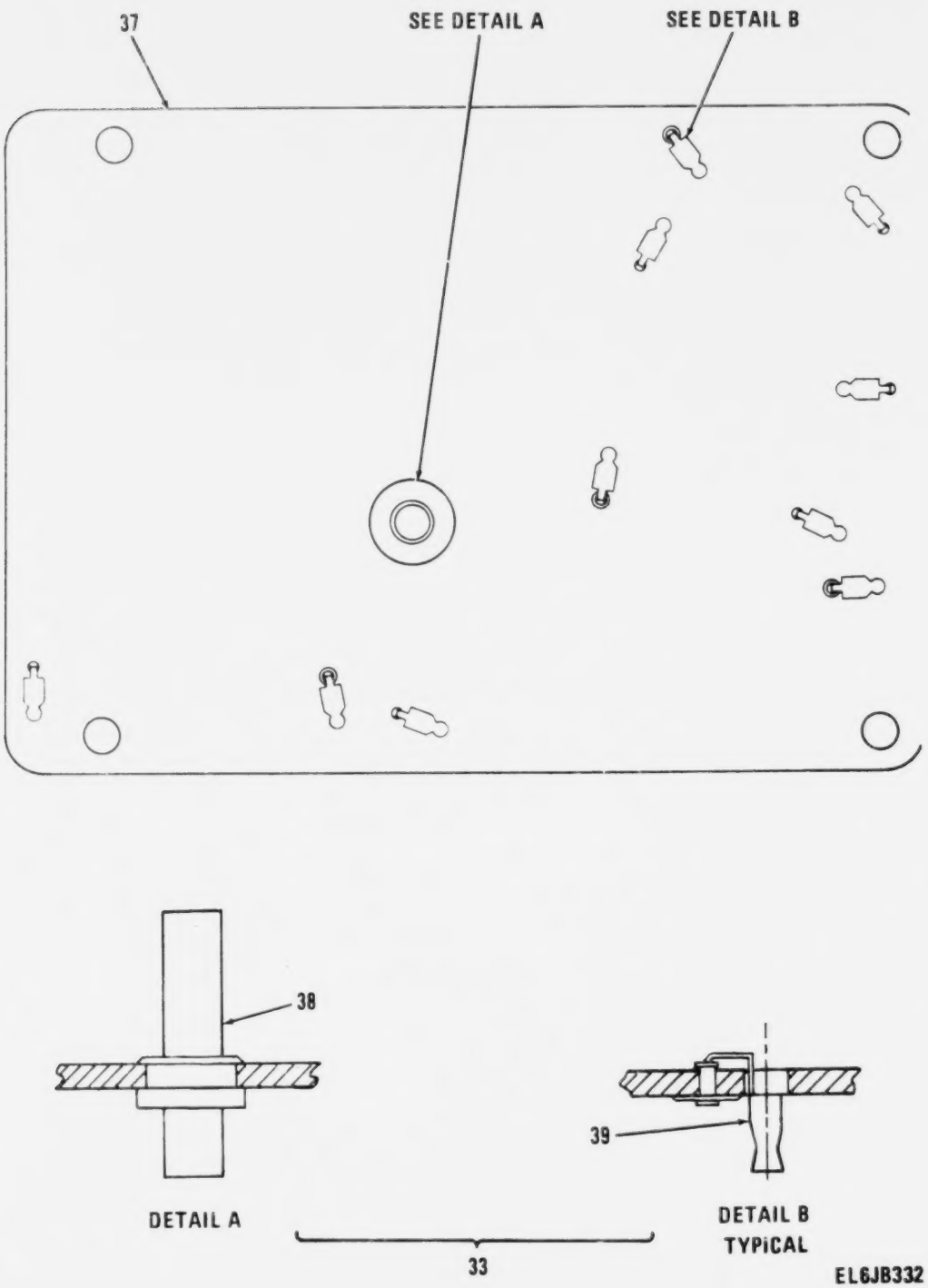

Figure 75. Amplifier Assembly, Audio Frequency (Sheet 3 of 3).

(1) ILLUSTRATION (a) FIG NO	(1) ILLUSTRATION (b) ITEM NO	(2) SMR CODE	(3) NATIONAL STOCK NUMBER	(4) FSCM	(5) PART NUMBER	(6) DESCRIPTION / USABLE ON CODE	(7) U/M	(8) QTY INC IN UNIT
						GROUP 01050501 AMPLIFIER ASSY,AUDIO FREQ		
75	1	XDDZZ		80063	SM-B-481757	SEMICOND DVC,DIODE	EA	1
75	2	PADZZ	5961-00-087-6047	81349	JAN1N645	SEMICONDUCTOR DEVIC	EA	2
75	3	PADZZ	5961-00-938-5247	70779	1N3477A	SEMICONDUCTOR DEVIC 2.2 V PORM 5 PCT,250 MILLIW MAX	EA	1
75	4	PADZZ	5961-00-846-9157	81349	JAN1N759A	SEMICONDUCTOR DEVIC	EA	1
75	5	PADZZ	5910-00-113-5475	81349	M39003/01-3006	CAPACITOR,FIXED,ELE	EA	4
75	6	PADZZ	5910-00-251-1446	72982	801-000X5F0-102K	CAPACITOR,FIXED,CER .0047 UF,PORM 20 PCT,100 VDCW	EA	1
75	7	PADZZ	5910-00-113-5475	81349	M39003/01-3006	CAPACITOR,FIXED,ELE	EA	2
75	8	PADZZ	5910-00-113-5689	81349	M39003/01-3015	CAPACITOR,FIXED,ELE	EA	1
75	9	PADZZ	5910-00-495-0042	81349	M39003/01-3076	CAPACITOR,FIXED,ELE	EA	1
75	10	PADZZ	5910-00-012-5545	99515	EP-60-1	CAPACITOR,FIXED,PLA 0.05 UF,PORM 10 PCT 50 VDCW	EA	2
75	11	PADZZ	5910-00-983-6866	81349	CK618X471K	CAPACITOR,FIXED,CER EJS	EA	1
75	12	PADZZ	5910-00-113-5277	81349	M39014/01-1563	CAPACITOR,FIXED,CER EJS	EA	1
75	13	XDDZZ		97315	4468	REACTOR 3 H PORM 10 PCT AT 1 VAC,1000 HZ,1 MILLIA DC,45 VDCW	EA	1
75	14	XADZZ		81349	JAN2N335	TRANSISTOR	EA	2
75	15	XADZZ		80063	SM-C-374844	TRANSISTOR	EA	1
75	16	XADZZ		81349	JAN2N328A	TRANSISTOR	EA	1
75	17	PADZZ	5905-00-141-0742	81349	RCR07G181JS	RESISTOR,FIXED,COMP	EA	1
75	18	PADZZ	5905-00-104-8358	81349	RCR07G822JS	RESISTOR,FIXED,COMP	EA	1
75	19	PADZZ	5905-00-126-6683	81349	RCR07G332JS	RESISTOR,FIXED,COMP	EA	1
75	20	PADZZ	5905-00-135-3973	81349	RCR07G221JS	RESISTOR,FIXED,COMP	EA	1
75	21	PADZZ	5905-00-141-0744	81349	RCR07G552JS	RESISTOR,FIXED,COMP	EA	1
75	22	PADZZ	5905-00-110-7622	81349	RCR07G682JS	RESISTOR,FIXED,COMP	EA	1
75	23	PADZZ	5905-00-106-3666	81349	RCR07G103JS	RESISTOR,FIXED,COMP	EA	1
75	24	PADZZ	5905-00-136-3891	81349	RCR07G621JS	RESISTOR,FIXED,COMP	EA	1
75	25	PADZZ	5905-00-115-2261	81349	RCR07G912JS	RESISTOR,FIXED,COMP	EA	1
75	26	PADZZ	5905-00-116-8555	81349	RCR07G153JS	RESISTOR,FIXED,COMP	EA	1
75	27	PADZZ	5905-00-068-8265	81349	RT10C2L103	RESISTOR,VARIABLE,W 10100 OHMS MAX RESISTANCE	EA	2
75	28	PADZZ	5905-00-119-8812	81349	RCR07G121JS	RESISTOR,FIXED,COMP	EA	1
75	29	PADZZ	5905-00-119-8768	81349	RCR07G821JS	RESISTOR,FIXED,COMP	EA	1
75	30	PADZZ	5905-00-105-7768	81349	RCR07G561JS	RESISTOR,FIXED,COMP	EA	1
75	31	PADZZ	5905-00-135-3975	81349	RCR07G680JS	RESISTOR,FIXED,COMP	EA	1
75	32	XDDZZ		50763	831161	TRANSFORMER,AF 0 MILLIA DC,500 TO 3000 HZ,50 VDCW, 0.1 MILLIW POWER LEVEL	EA	1
75	33	XDDZZ		80063	SM-D-414250	CIRCUIT BOARD ASSY	EA	1
75	34	PADZZ	5999-00-752-5321	07047	A-10012	INSULATOR,DISK	EA	4
75	35	PADZZ	5305-00-958-6382	96906	MS35206-206	SCREW,MACHINE	EA	2
75	36	PADZZ	5310-01-100-6991	30655	F92-1660-26	NUT,SELF-LOCKING,HE	EA	2
75	37	XDDZZ		80063	SM-D-414252	PRINTED CIRCUIT BO	EA	1
75	38	XDDZZ		80063	SM-C-413575-1	TERMINAL,STUD	EA	1

(1) ILLUSTRATION (a) FIG NO	(1) ILLUSTRATION (b) ITEM NO	(2) SMR CODE	(3) NATIONAL STOCK NUMBER	(4) FSCM	(5) PART NUMBER	(6) DESCRIPTION / USABLE ON CODE	(7) U/M	(8) QTY INC IN UNIT
75	39	XDDZA		80063	SM-C-413574	CONTACT.....	EA	10

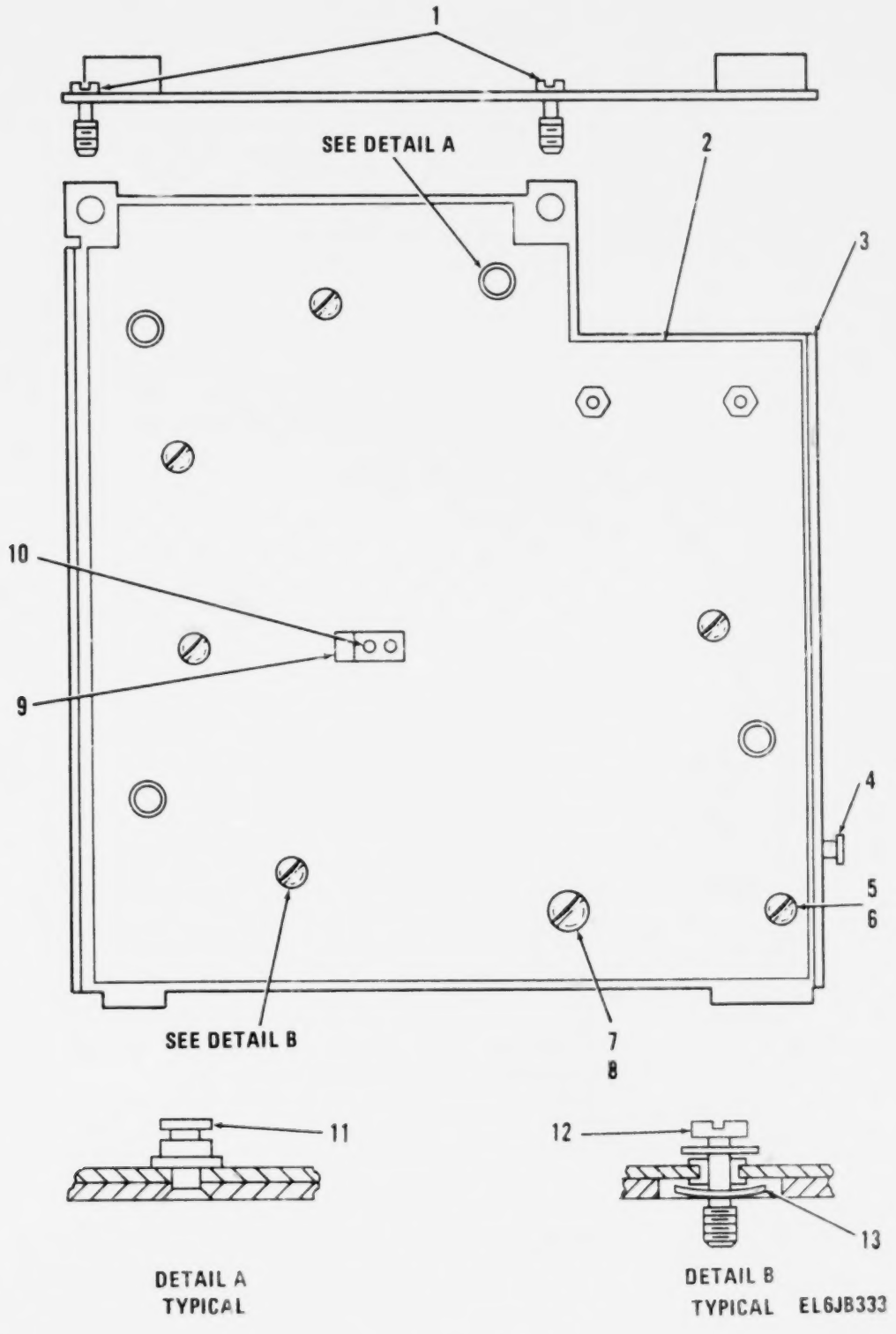

Figure 76. Chassis Assembly, Electrical (Sheet 1 of 2).

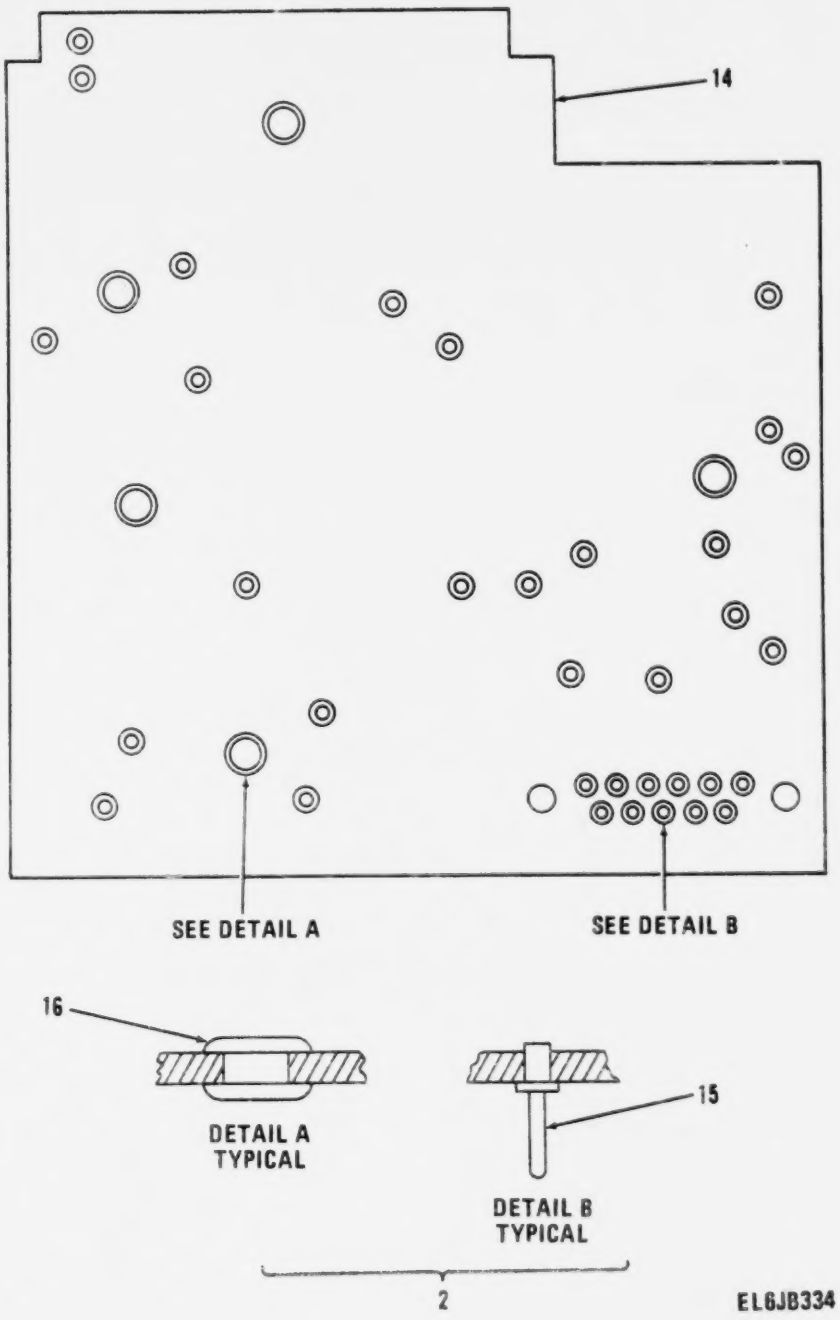

Figure 76. Chassis Assembly, Electrical (Sheet 2 of 2).

(1) ILLUSTRATION (a) FIG NO	(1) ILLUSTRATION (b) ITEM NO	(2) SMR CODE	(3) NATIONAL STOCK NUMBER	(4) FSCM	(5) PART NUMBER	(6) DESCRIPTION / USABLE ON CODE	(7) U/M	(8) QTY INC IN UNIT
						GROUP 010506 CHASSIS ASSY,ELECTRICAL		
						A1 SM-C-414276		
76	1	PAFZZ	5305-00-823-5826	80063	SM-B-414278	SCREW,EXTERNALLY RE	EA	2
76	2	XADDA		80063	SM-D-414281	CIRCUIT BOARD ASSY	EA	1
76	3	XAFDD		80063	SM-D-414279	CHASSIS	EA	1
76	4	XDDZZ		80063	SM-B-414280	RIVET	EA	1
76	5	PAFZZ	5305-00-139-7011	80063	SM-C-413531-9	SCREW,EXTERNALLY RE	EA	
76	6	PAFZZ	5310-00-045-4007	96906	MS35338-41	WASHER,LOCK	EA	1
76	7	PAFZZ	5305-00-138-0332	80063	SM-C-413531-12	SCREW,EXTERNALLY RE	EA	1
76	8	PAFZZ	5310-00-045-3299	96906	MS35338-42	WASHER,LOCK	EA	1
76	9	XDDZZ		80063	SM-B-413539	CLIP	EA	1
76	10	XDDZZ		08544	SE25CD PL	EYELET,MTLC	EA	2
76	11	XDDZZ		80063	SM-B-413535	STUD	EA	4
76	12	PAFZZ	5305-00-988-5747	83486	43-04-04120CD PL	SCREW,ASSEMBLED WAS	EA	5
76	13	PAFZZ		78553	C-18695SS-012	NUT,SHEET SPRING	EA	5
76	14	XDDZZ		80063	SM-E-414283	PRINTED CIRCUIT BD	EA	1
76	15	XDDZZ		80063	SM-B-413546-1	CONTACT	EA	34
76	16	XDDZZ		08544	SE54SL	EYELET,MTLC	EA	5

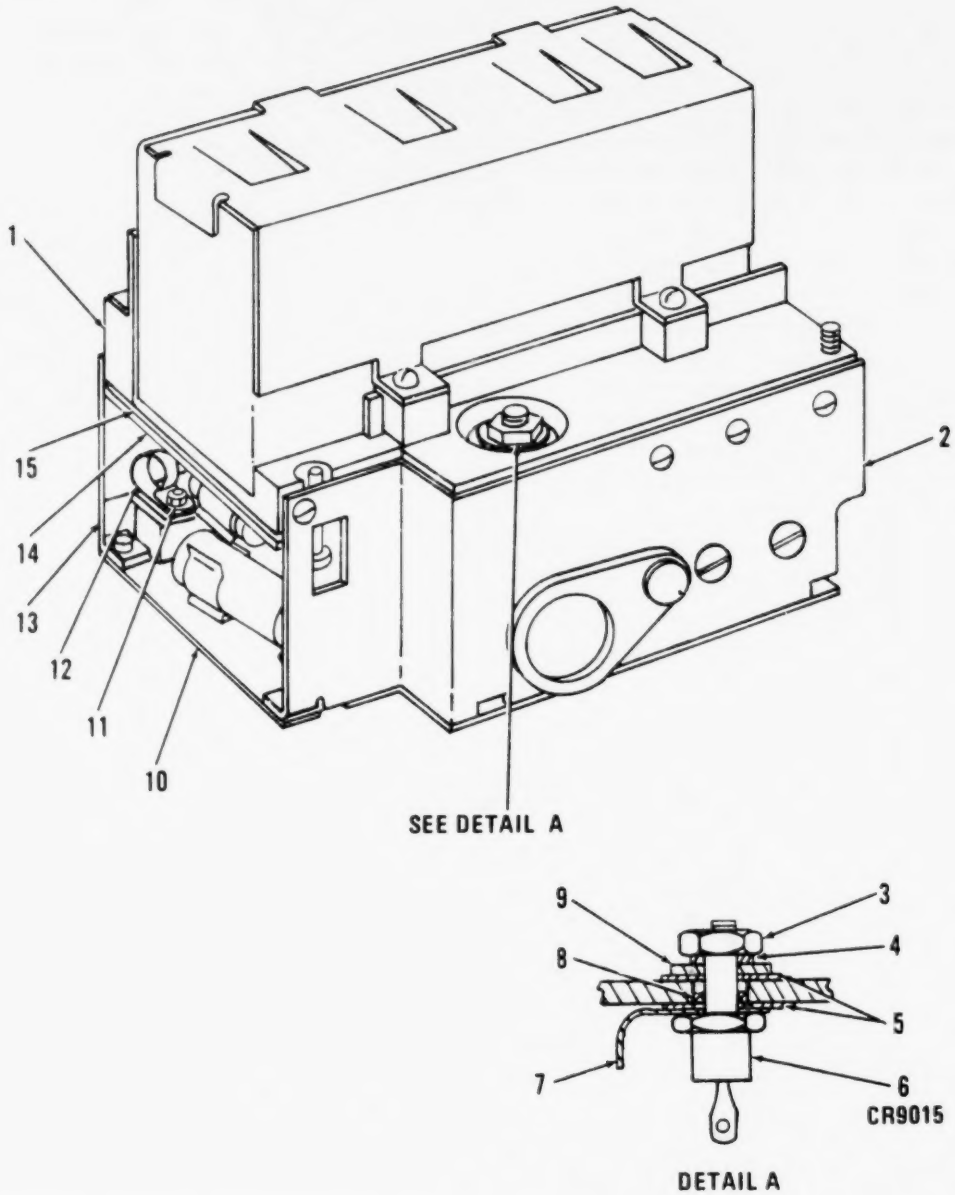

Figure 77. Power Supply Assembly (Sheet 1 of 3).

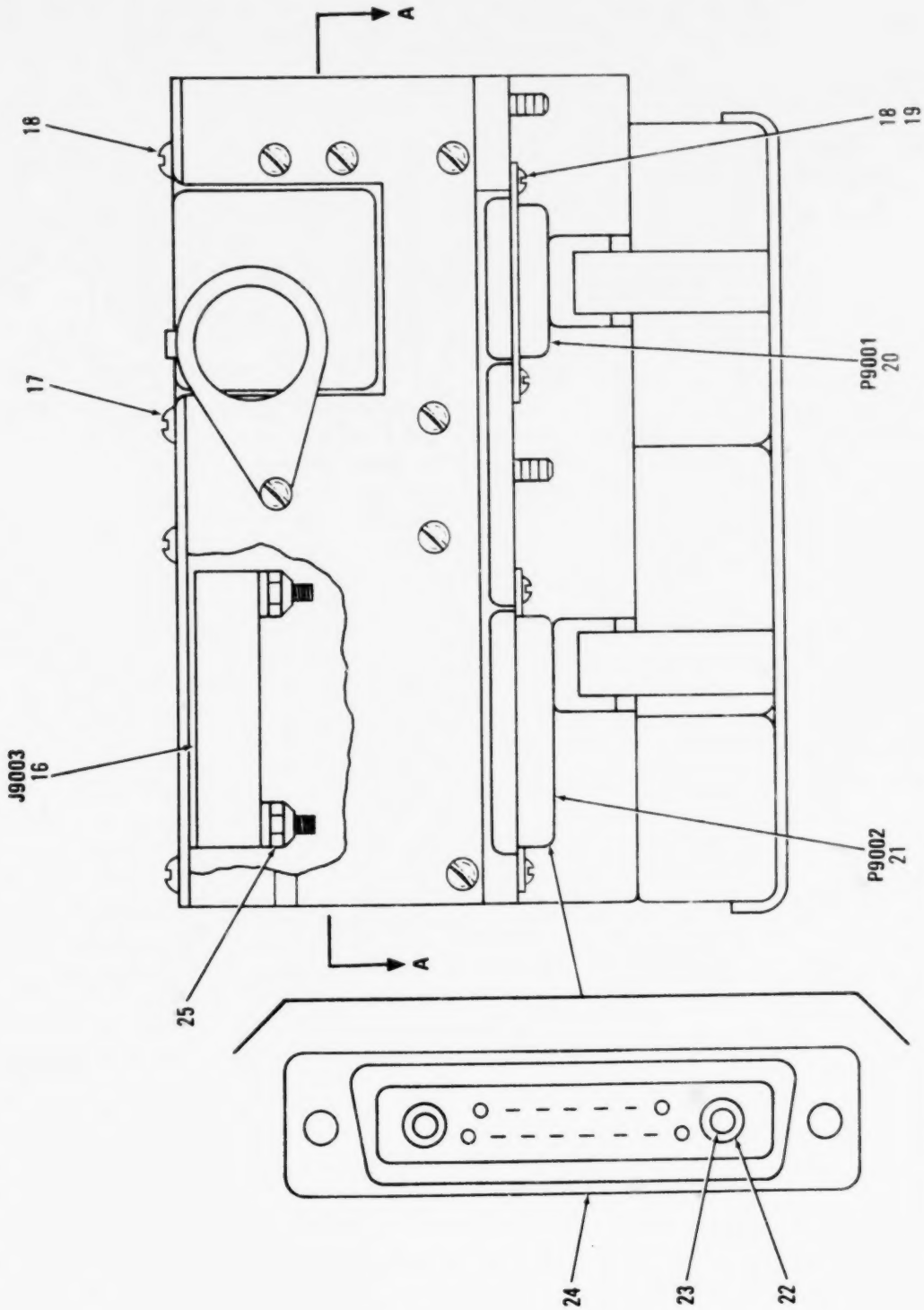

PREFIX ALL REFERENCE DESIGNATIONS WITH A9000

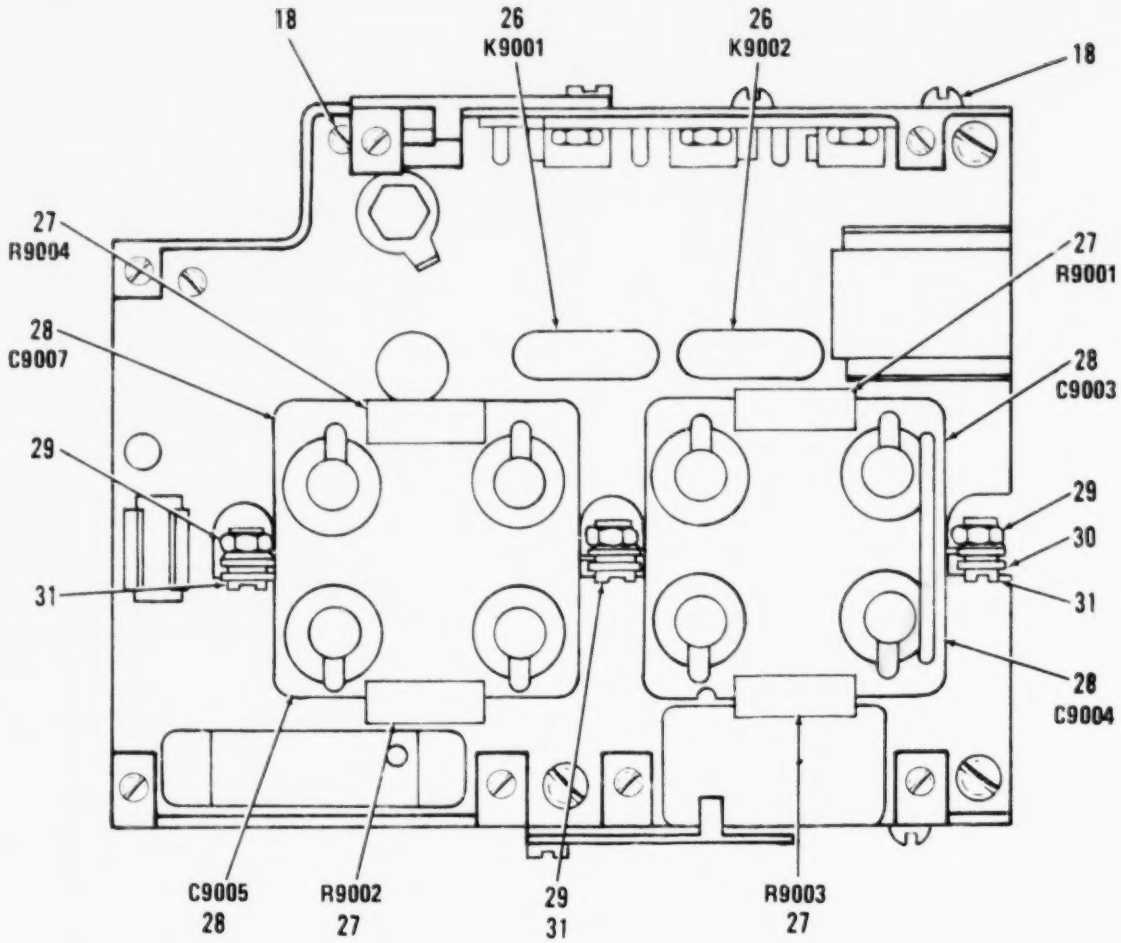

PREFIX ALL REFERENCE DESIGNATIONS WITH A9000

Figure 77. Power Supply Assembly (Sheet 3 of 3).

(1) ILLUSTRATION (a) FIG NO	(1) ILLUSTRATION (b) ITEM NO	(2) SMR CODE	(3) NATIONAL STOCK NUMBER	(4) FSCM	(5) PART NUMBER	(6) DESCRIPTION USABLE ON CODE	(7) U/M	(8) QTY INC IN UNIT
						GROUP 0106 POWER SUPPLY ASSY		
						A9000 SM-D-414304		
77	1	XAHDD		80063	SM-D-414331	CHASSIS ASSY	EA	1
77	2	PAHHH	5905-00-435-2604	80063	SM-C-414344	RESISTOR ASSEMBLY	EA	1
77	3	PAHZZ	5310-00-934-9751	96906	MS35650-302	NUT,PLAIN,HEXAGON	EA	1
77	4	PAHZZ	5310-00-045-3296	96906	MS35338-43	WASHER,LOCK	EA	1
77	5	XBHZZ	5310-01-127-1408	03877	HP35W-1C-4	WASHER,FLAT	EA	2
77	6	PAHZZ	5961-00-935-0138	81349	JANIN1202A	SEMICONDUCTOR DEVIC	EA	1
77	7	XBHZZ		77147	14123-A	TERMINAL,LUG	EA	1
77	8	PAHZZ		03877	HP35W-1C-5	WASHER,FLAT	EA	1
77	9	PAHZZ	5310-00-167-0834	88044	AN960-10L	WASHER,FLAT	EA	1
77	10	PAFDD	5820-00-229-6623	80063	SM-D-414322	CIRCUIT CARD ASSEMB	EA	1
77	11	PAHZZ	5310-00-950-1310	96906	MS27183-4	WASHER,FLAT	EA	1
77	12	XBHZZ		60641	3/16-2NA	CLAMP,CABLE	EA	1
77	13	XAHDD		80063	SM-C-414351	PWR SPLY PNL ASSY	EA	1
77	14	PAHHH	5820-00-229-6622	80063	SM-D-414310	POWER SUPPLY,ELECTR	EA	1
77	15	XDDZZ		80063	SM-C-414306	INSULATOR,PLATE	EA	1
77	16	PAHZA	5935-00-823-0775	95238	683-2GD	CONNECTOR,RECEPTACL 11 SOCKET TYPE CONTACTS	EA	1
77	17	PAFZZ	5305-00-558-4889	96906	MS35223-14	SCREW,MACHINE	EA	7
77	18	PAHZZ	5305-00-405-8960	96906	MS35223-13	SCREW,MACHINE	EA	2
77	19	PAHZZ	5310-00-543-2410	96906	MS35338-40	WASHER,LOCK	EA	2
77	20	PAHZZ	5935-00-975-6265	81349	M24308-3-2	CONNECTOR,RECEPTACL 15 PIN TYPE CONTACTS	EA	1
77	21	AHHHH		80063	SM-C-414312	CONNECTOR ASSY 15 PIN TYPE CONTACTS,1 SOCKET TYPE HIGH VOLT CONTACT	EA	1
77	22	PAHZZ		71468	051380-0000	STABILIZER	EA	1
77	23	PAHZA		80063	SM-C-414120-1	CONTACT,ELECTRICAL	EA	1
77	24	PAHZA	5935-00-949-5647	42498	38531-3	CONNECTOR,RECEPTACL 15 PIN TYPE CONTACTS	EA	1
77	25	PAHZZ	5310-00-582-9176	30655	F92-1660-40	NUT,SELF-LOCKING,HE	EA	2
77	26	PAFZZ	5945-00-853-5945	82050	8R8-600A1-F1-26V	RELAY,ELECTROMAGNET DPDT FORM C,32 VDC MAX,600 OHMS PLUS 10 PCT COIL RES	EA	2
77	27	PAHZZ	5905-00-104-8351	81349	RCR32G154JS	RESISTOR	EA	4
77	28	PAHZZ	5910-00-857-4340	80063	SM-C-414307	CAPACITOR,FIXED,ELE 8 UF,PLUS 10 MINUS 50 PCT TOL,350 VDCW	EA	4
77	29	PAHZZ	5310-00-818-5424	72962	96NM107-62	NUT,SELF-LOCKING,HE	EA	3
77	30	PAHZZ	5310-00-167-0816	88044	AN960-6	WASHER,FLAT	EA	1
77	31	PAHZZ	5305-00-984-4984	96906	MS35206-227	SCREW,MACHINE	EA	3

LEGEND

REF DES	ITEM NO	REF DES	ITEM NO	REF DES	ITEM NO	REF DES	ITEM NO
CR9001	1	CR9007	3	C9001	4	R9005	9
CR9002	2	CR9008	3	C9002	5	R9006	10
CR9003	2	CR9010	3	C9006	6	R9007	11
CR9004	2	CR9013	3	C9008	7	R9008	12
CR9005	2	CR9014	1	C9010	8		

EL6JB338

PREFIX ALL REFERENCE DESIGNATIONS WITH A9000

Figure 78. Power Supply, Electrical (Sheet 1 of 2).

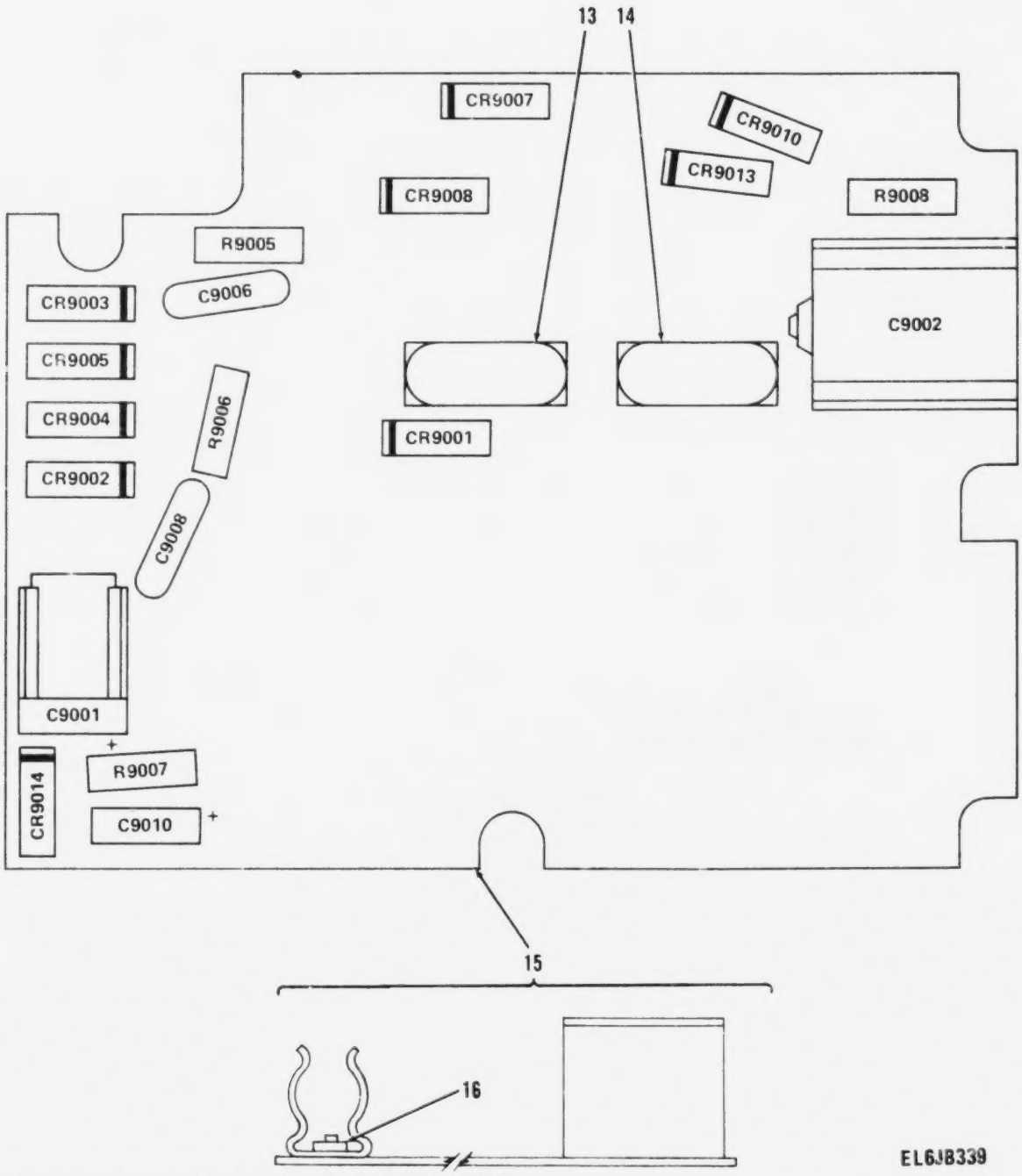

Figure 78. Power Supply, Electrical (Sheet 2 of 2).

(1) ILLUSTRATION (a) FIG NO	(1) ILLUSTRATION (b) ITEM NO	(2) SMR CODE	(3) NATIONAL STOCK NUMBER	(4) FSCM	(5) PART NUMBER	(6) DESCRIPTION / USABLE ON CODE	(7) U/M	(8) QTY INC IN UNIT
						GROUP 010601 POWER SUPPLY,ELECTRICAL		
						(CIRCUIT BOARD ASSY)		
						A9000-2 SM-D-414310		
78	1	PAHZZ	5961-00-087-8047	81349	JAN1N645	SEMICONDUCTOR DEVIC	EA	2
78	2	PAHZZ	5961-00-064-2379	81349	JAN1N649	SEMICONDUCTOR DEVIC	EA	4
78	3	PAHZZ	5961-00-082-4073	81349	JAN1N4249	SEMICONDUCTOR DEVIC	EA	4
78	4	PAHZZ	5910-01-016-0116	81349	M39006-09-8717	CAPACITOR,FIXED,ELE	EA	1
78	5	PAHZZ	5910-00-342-3618	81349	M39006/19-1023	CAPACITOR,FIXED,ELE	EA	1
78	6	PAHZZ	5910-00-892-3027	80063	SM-C-413567-1	CAPACITOR,FIXED,CER .001 UF,PORM 20 PCT,100 VDCW	EA	1
78	7	PAHZZ	5910-01-038-5395	81349	CMR05F391GODR	CAPACITOR,FIXED,MIC	EA	1
78	8	PAHZZ	5910-00-007-2004	81349	M39003/01-3088	CAPACITOR,FIXED,ELE	EA	1
78	9	PAHZZ	5905-00-408-5254	81349	RWR80S49R9FR	RESISTOR,FIXED,WIRE 50 OHMS,PORM 5 PCT RES,35 VDCW,1 WATT	EA	1
78	10	PAHZZ		56289	451E3915	RESISTOR,FIXED WIRE 390 OHMS PORM 5 PCT RES,3 WATT	EA	1
78	11	PAHZZ	5905-00-984-0429	81349	RW69V271	RESISTOR,FIXED,WIRE 270 OHMS PORM 5 PCT RES,3 WATT	EA	1
78	12	PAHZZ	5905-00-885-2172	81349	RWR80S10R0FR	RESISTOR,FIXED,WIRE 10 OHMS,PORM 1 PCT RES,35 VDCW,1 WATT	EA	1
78	13	PAHZA	5935-00-901-4717	05574	000300-0316	SOCKET,PLUG-IN ELEC 7 SOCKET TYPE CONTACTS	EA	1
78	14	PAHZA	5935-00-884-5288	80045	831124-6	SOCKET,PLUG-IN ELEC 7 SOCKET TYPE CONTACTS	EA	1
78	15	PADDD	5820-00-247-0177	80063	SM-C-414315	PRINTED WIRING BOAR	EA	1
78	16	PAHZZ	5820-00-999-7295	80063	SM-B-414321	SPACER	EA	1

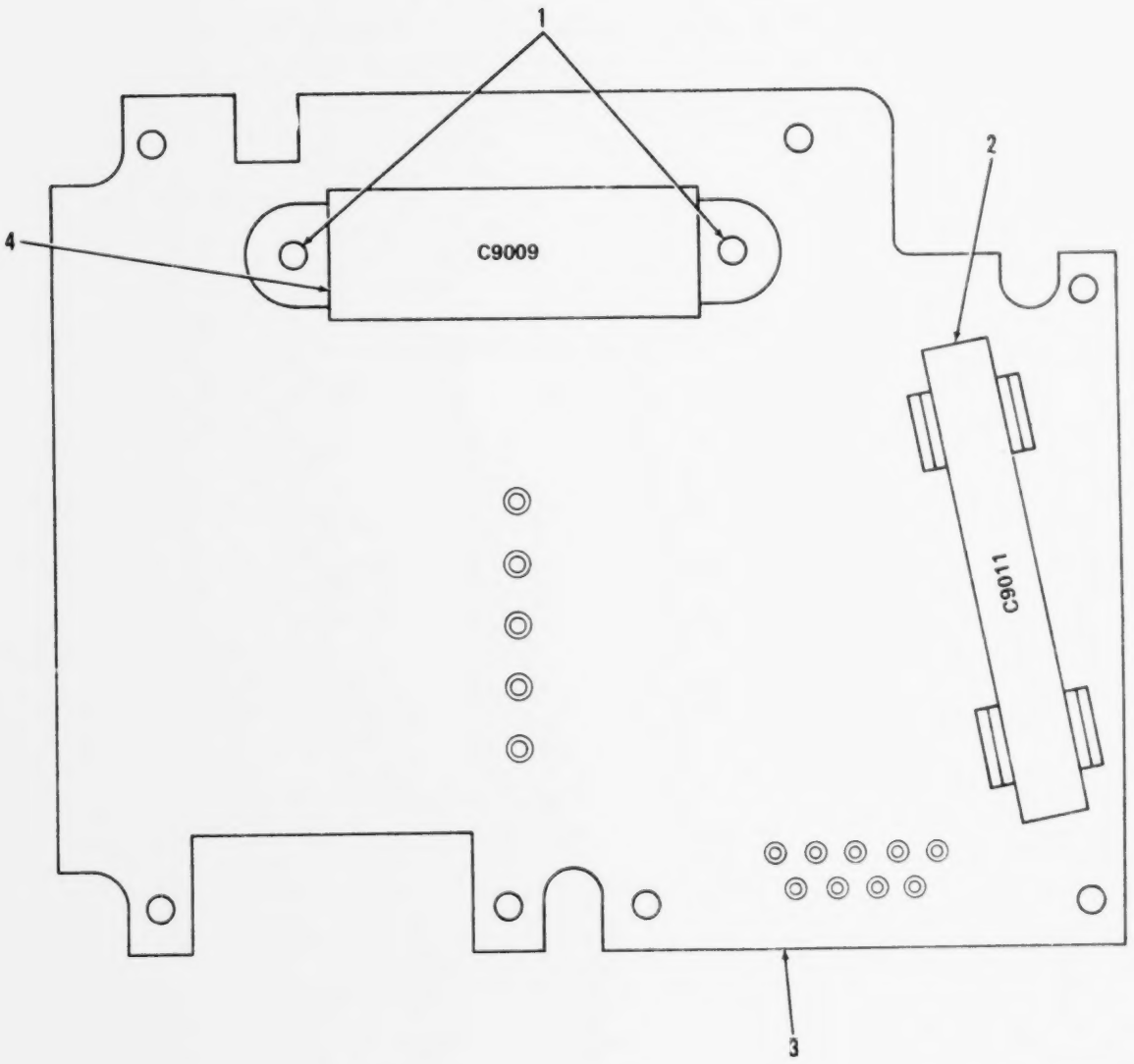

PREFIX ALL REFERENCE DESIGNATIONS WITH A9000

Figure 79. Circuit Card Assembly, Cover Assembly (Sheet 1 of 2).

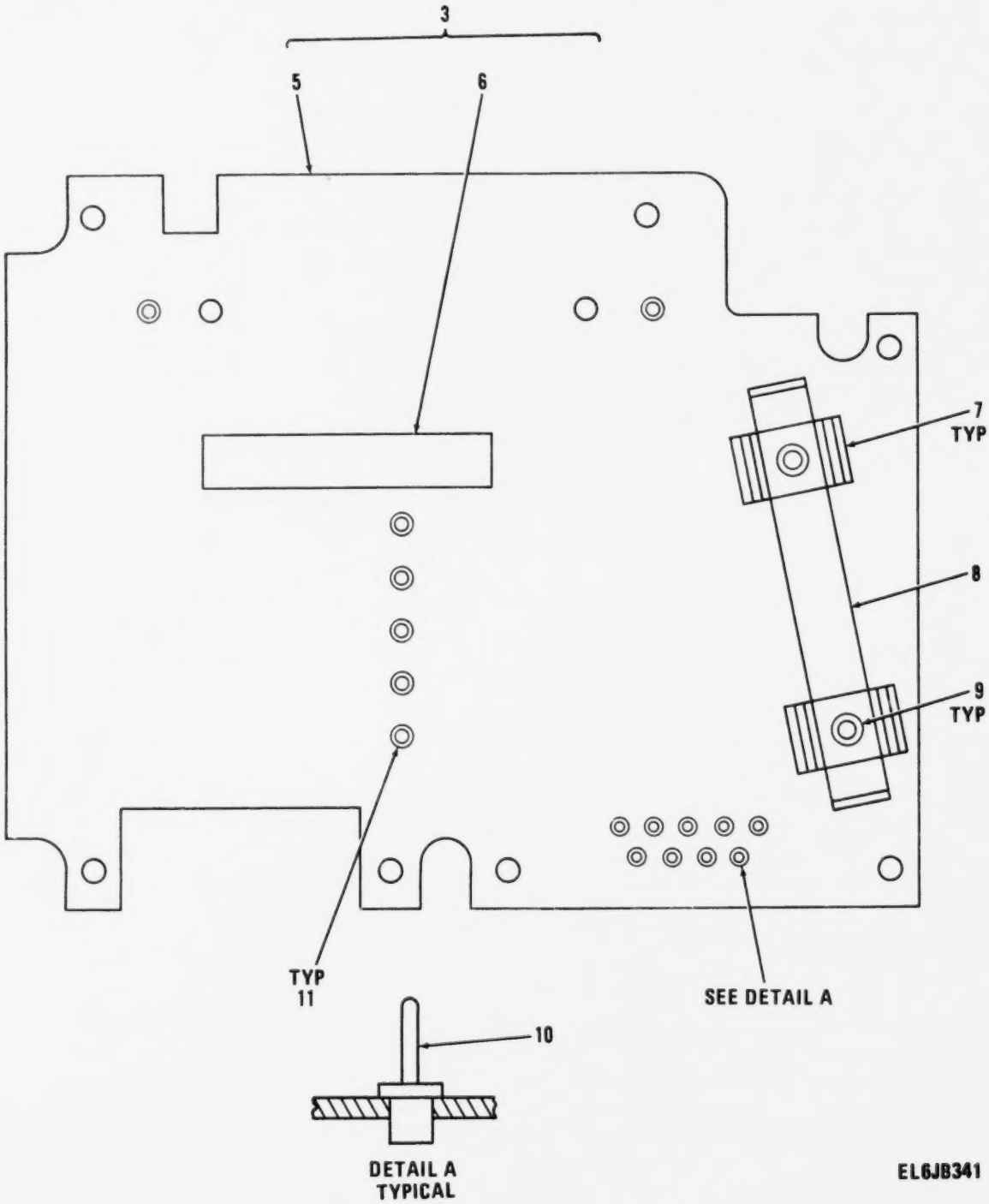

Figure 79. Circuit Card Assembly, Cover Assembly (Sheet 2 of 2).

(1) ILLUSTRATION (a) FIG NO	(1) ILLUSTRATION (b) ITEM NO	(2) SMR CODE	(3) NATIONAL STOCK NUMBER	(4) FSCM	(5) PART NUMBER	(6) DESCRIPTION / USABLE ON CODE	(7) U/M	(8) QTY INC IN UNIT
						GROUP 010602 CIRCUIT CARD ASSY (COVER ASSY) A9000-1 SM-D-414322		
79	1	PAFZZ	5305-00-405-8960	96906	MS35223-13	SCREW,MACHINE	EA	2
79	2	PAFZZ	5910-00-901-4641	00213	E2762	CAPACITOR,FIXED,PLA 4 UF,PORM 5 PCT,70 VOLTS RMS RATED VOLTAGE	EA	1
79	3	PAFDD	5820-00-229-6626	80063	SM-D-414325	CIRCUIT CARD ASSEMB	EA	1
79	4	PAFZZ	5910-00-901-4692	80063	SM-C-374802	CAPACITOR,FIXED,MET .85 UF,PORM 5 PCT,170 VOLTS RMS RATED VOLTAGE	EA	1
79	5	XADZZ		80063	SM-D-414327	PRINTED CIRCUIT BD	EA	1
79	6	XDDZZ		80063	SM-B-414302-3	PAD MAKE FROM MIL-R-6130 TYP1,GR A,COND SOFT,BLK SYNTH 1/8 THK	EA	1
79	7	XDDZZ		01801	100-225-9-14	HOLDER	EA	2
79	8	XDDZZ		80063	SM-C-414330	STRAP	EA	1
79	9	XDDZZ		08544	SE43SL PL	EYELET,MTLC	EA	2
79	10	XDDZA		80063	SM-B-413546-1	CONTACT	EA	9
79	11	XDDZZ		70528	453S-060	EYELET,MTLC	EA	9

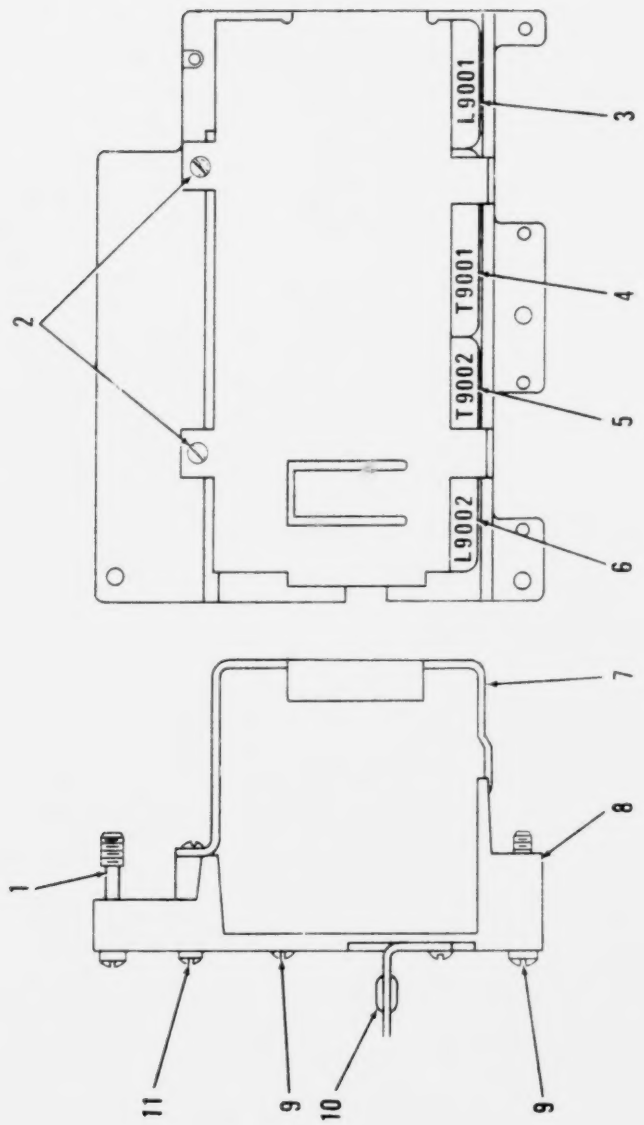

Figure 80. Chassis Assembly (Sheet 1 of 3).

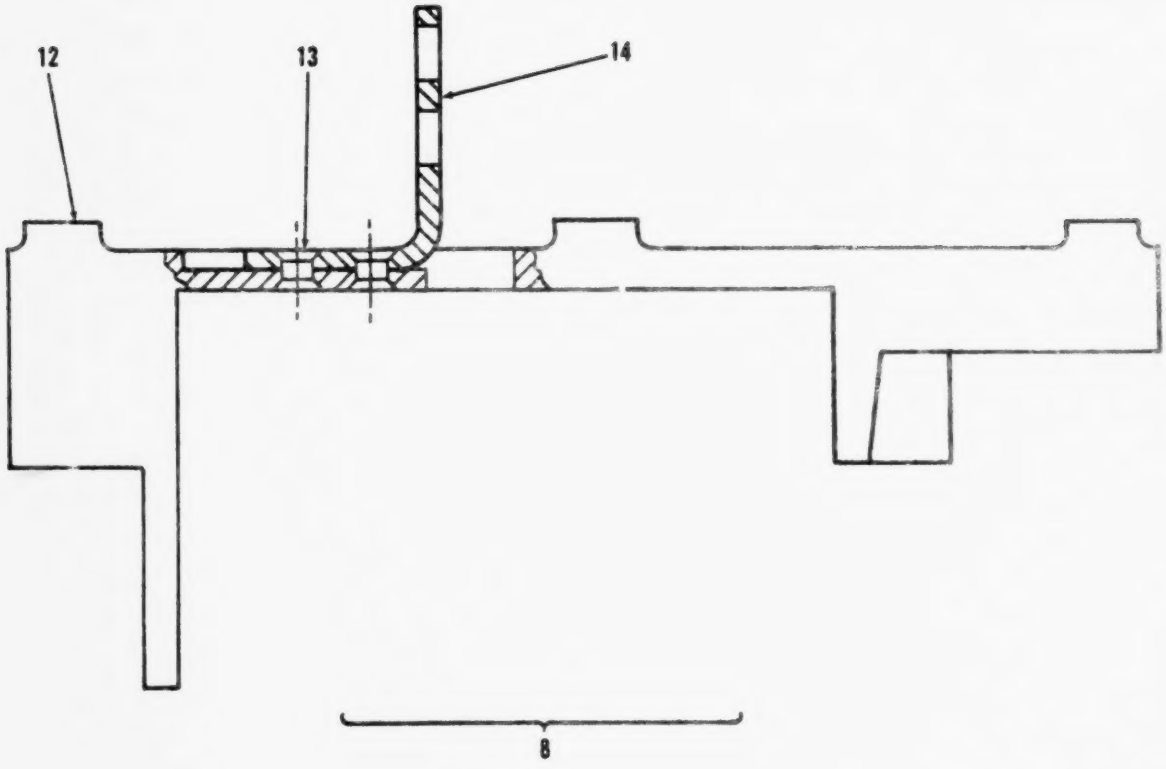

Figure 80. Chassis Assembly (Sheet 2 of 3).

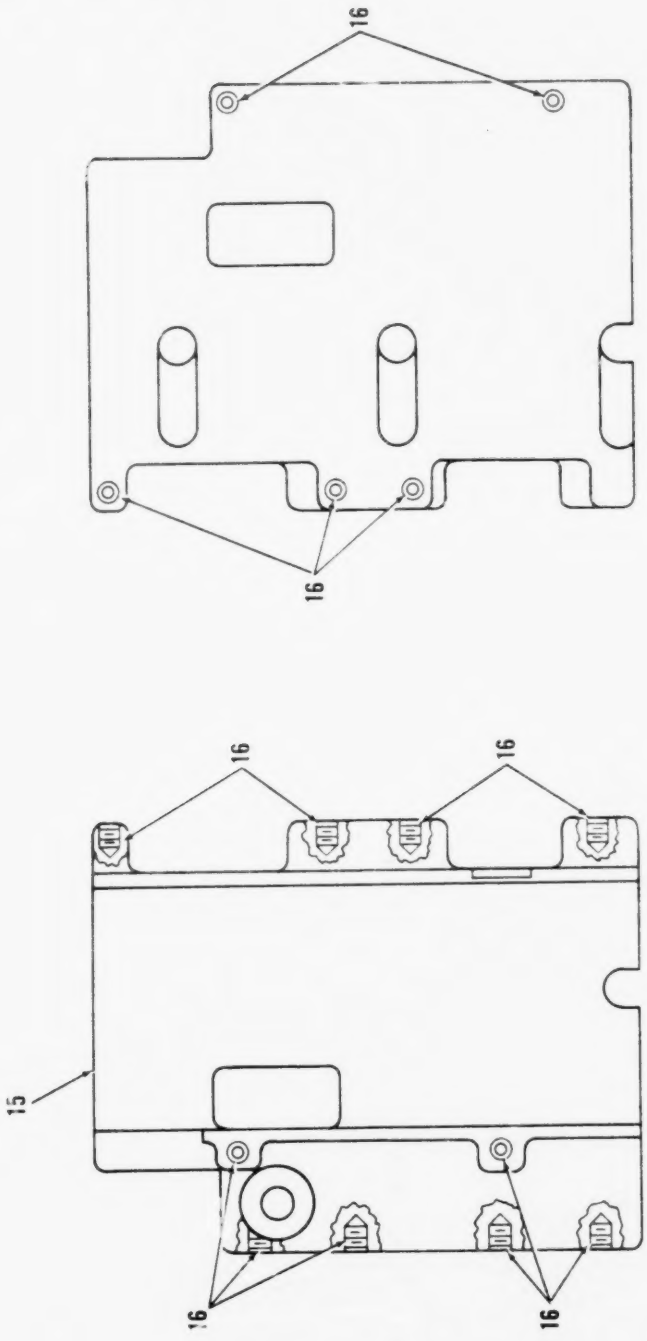

Figure 80. Chassis Assembly (Sheet 3 of 3).

(1) ILLUSTRATION (a) FIG NO	(1) ILLUSTRATION (b) ITEM NO	(2) SMR CODE	(3) NATIONAL STOCK NUMBER	(4) FSCM	(5) PART NUMBER	(6) DESCRIPTION / USABLE ON CODE	(7) U/M	(8) QTY INC IN UNIT
						GROUP 010603 CHASSIS ASSEMBLY		
						A9000 SM-C-414331		
80	1	PAFZZ	5305-00-139-7007	80063	SM-C-413884-6	SCREW,EXTERNALLY RE	EA	3
80	2	PADZZ	5305-00-405-8960	96906	MS35223-13	SCREW,MACHINE	EA	2
80	3	PAHZZ	5950-00-901-4654	80063	SM-C-374998	REACTOR 1.1 MILLIH MIN INDUCTANCE AT 1 KHZ,5 VAC,2.5 AMP DC, 2000 HZ	EA	1
80	4	PAHZZ	5950-00-832-7999	97315	BC4517	TRANSFORMER,POWER 700V,200 MILLA DC OUT,275V,80 MILLIA DC OUT 25V,36MILLIA OUT	EA	1
80	5	PAHZZ	5950-00-899-3400	97315	BC4516A	TRANSFORMER,POWER 58V,130 MILLIA DC OUT,143V,290 MILLIA DC OUT,150 VDCW MAX	EA	1
80	6	PAHZZ	5950-00-899-3399	80063	SM-D-439959	REACTOR 250 MILLIH PORM 8 MILLIH AT 1 KHZ,10 VRMS	EA	1
80	7	XDDZZ		80063	SM-D-414337	SUPPORT	EA	1
80	8	XBHDD		80063	SM-B-414338	CHASSIS ASSY	EA	1
80	9	PAHZZ		02615	M37AS440-5CR	SCREW,SELF-LOCKING	EA	2
80	10	XDDZZ		80063	SM-C-414148-4	GROMMET	EA	3
80	11	PAHZZ	5305-00-139-7009	80063	SM-C-413884-4	SCREW,EXTERNALLY RE	EA	1
80	12	XDDDD		80063	SM-B-414341	CHASSIS ASSY	EA	1
80	13	PADZZ	5320-00-234-1555	96906	MS20426A3-3	RIVET,SOLID	EA	6
80	14	XDDZZ		80063	SM-B-414340	BRACKET	EA	3
80	15	XDDZZ		80063	SM-D-414343	CHASSIS	EA	1
80	16	PADZZ	5340-00-853-6424	73957	N11240-18	INSERT,SCREW THREAD	EA	15

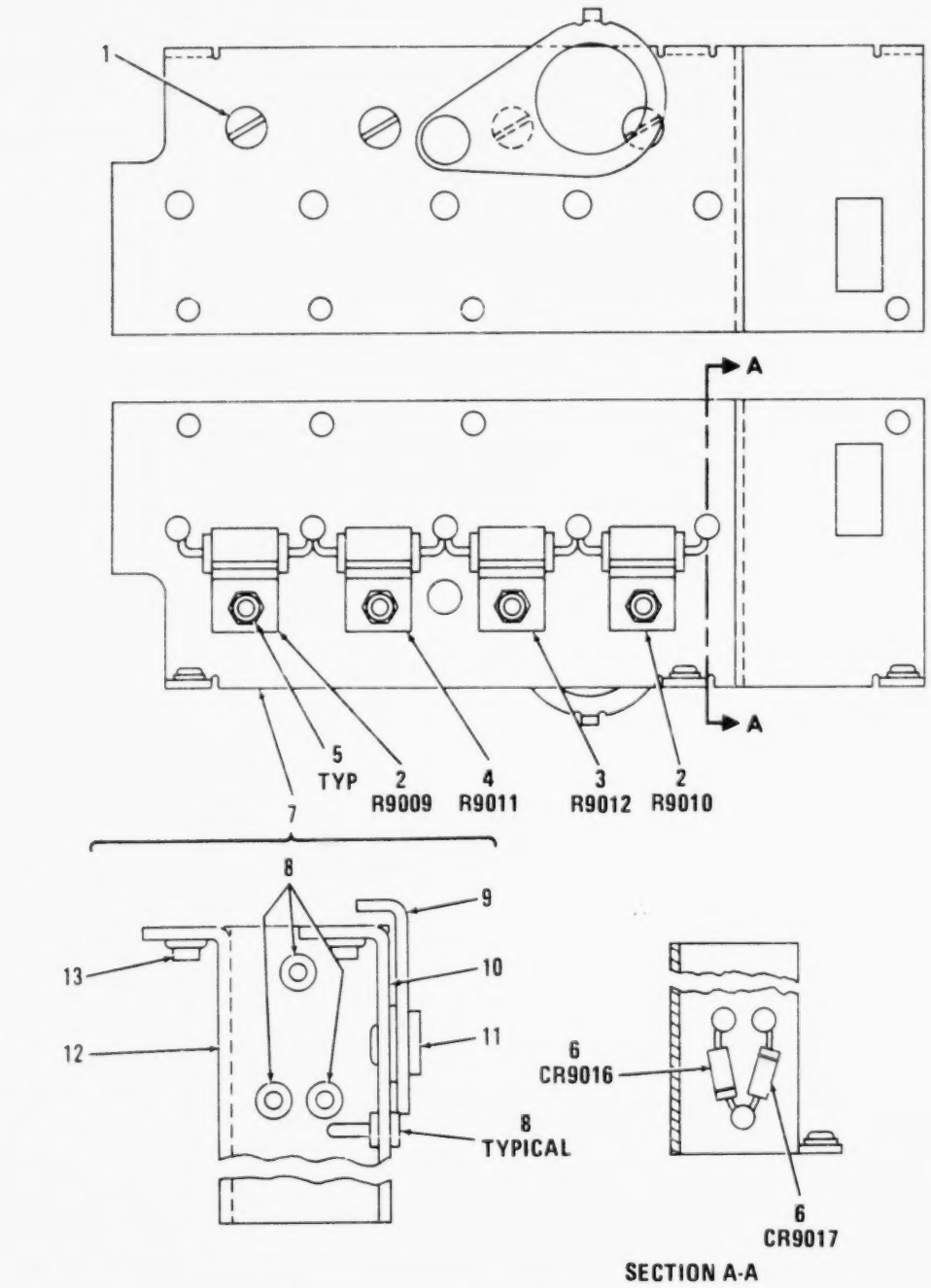

Figure 81. Resistor Assembly

(1) ILLUSTRATION (A) FIG NO	(1) ILLUSTRATION (B) ITEM NO	(2) SMR CODE	(3) NATIONAL STOCK NUMBER	(4) FSCM	(5) PART NUMBER	(6) DESCRIPTION / USABLE ON CODE	(7) U/M	(8) QTY INC IN UNIT
						GROUP 010604 RESISTOR ASSEMBLY		
						A9000 SM-C-414344		
81	1	PAHZZ	5305-00-954-3487	96906	MS35190-271	SCREW,MACHINE	EA	2
81	2	PAHZZ	5905-00-892-6329	01121	GM1805	RESISTOR,FIXED,COMP 18 OHMS PORM 5 PCT RES 3.0 WATTS	EA	2
81	3	PAHZZ	5905-00-892-6330	01121	GM1025	RESISTOR,FIXED,COMP 1000 OHMS,PORM 5 PCT RES,3.0 WATTS	EA	1
81	4	PAHZZ	5905-00-892-6328	01121	GM1815	RESISTOR,FIXED,COMP 180 OHMS,PORM 5 PCT RES,3.0 WATTS	EA	1
81	5	PAHZZ	5310-00-582-9176	30655	F92-1660-40	NUT,SELF-LOCKING,HE	EA	2
81	6	PAHZZ	5961-00-064-2379	81349	JAN1N649	SEMICONDUCTOR DEVIC	EA	2
81	7	PAHHH	5820-00-246-4453	80063	SM-B-414346	PANEL ASSEMBLY	EA	1
81	8	PAHZZ	5940-00-552-5120	98291	RSTSM1P47	TERMINAL,STUD	EA	8
81	9	XBHZZ		80063	SM-C-414349	LOCK,RETAINER	EA	1
81	10	XBHZZ	5310-00-754-4264	78189	3502-10-55	WASHER,SPRING TENSI	EA	1
81	11	XBHZZ		80063	SM-B-414350	RIVET,TUBULAR	EA	1
81	12	XBHZZ		80063	SM-D-414348	PANEL	EA	1
81	13	XBHZZ	5310-01-057-8778	30655	22NCFMA2-40	NUT,CLINCH	EA	3

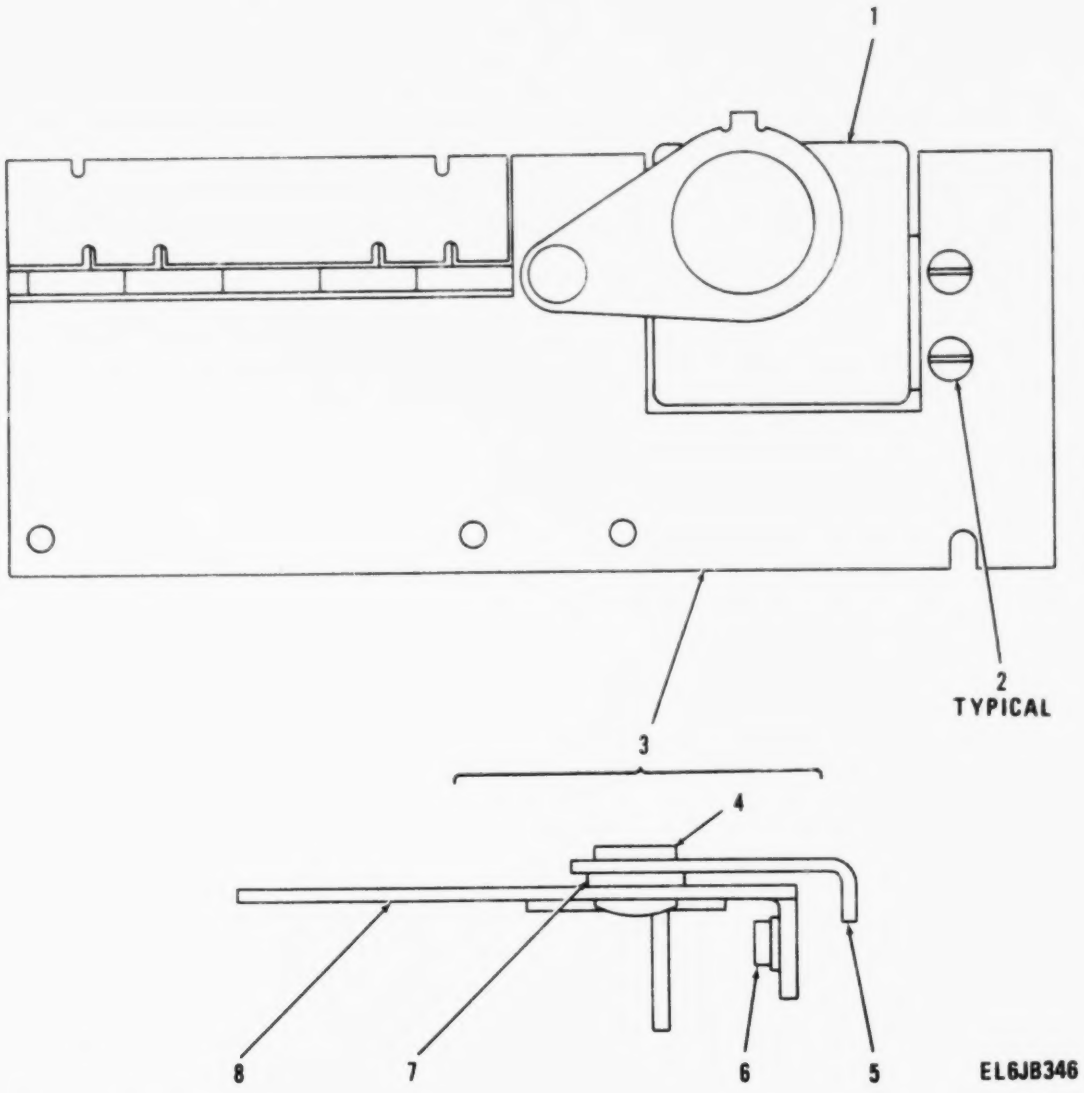

Figure 82. Power Supply Panel Assembly

(1) ILLUSTRATION (a) FIG NO	(1) ILLUSTRATION (b) ITEM NO	(2) SMR CODE	(3) NATIONAL STOCK NUMBER	(4) FSCM	(5) PART NUMBER	(6) DESCRIPTION USABLE ON CODE	(7)
						GROUP 0110605 POWER SUPPLY PANEL ASSY	
						A9000 SM-C-414351	
82	1	PAHZZ	5950-00-901-4735	97315	BC4522	REACTOR 130 MILLIH,POWR 15 MILLIH AT 1 AMP,10 VRMS	1
82	2	PAHZZ	5305-00-958-5483	96906	MS35190-221	SCREW,MACHINE	1
82	3	XDDDD		80063	SM-C-414354	PANEL ASSY	1
82	4	XDDZZ		80063	SM-B-414350	RIVET,TUBULAR	1
82	5	XDDZZ		80063	SM-C-414349	LOCK,RETAINING	1
82	6	XDDZZ	5310-01-057-8778	30655	22NCFMAZ-40	NUT,SLFLKG	1
82	7	XDDZZ	5310-00-754-4264	78189	3502-10-55	WASHER,SPRING TENSI	1
82	8	XDDZZ		80063	SM-C-414356	PANEL ASSY	1

LEGEND

REF DES	ITEM NO	REF DES	ITEM NO	REF DES	ITEM NO	REF DES	ITEM NO
C9401	1	Q9403	3	R9401	4	R9405	5
C9402	2	Q9404	3	R9402	4	R9406	5
Q9401	3	Q9405	3	R9403	4	R9407	5
Q9402	3	Q9406	3	R9404	4	R9408	5

EL6JB347

PREFIX ALL REFERENCE DESIGNATIONS WITH A9400

Figure 83. Semiconductor Device Assembly (Sheet 1 of 3).

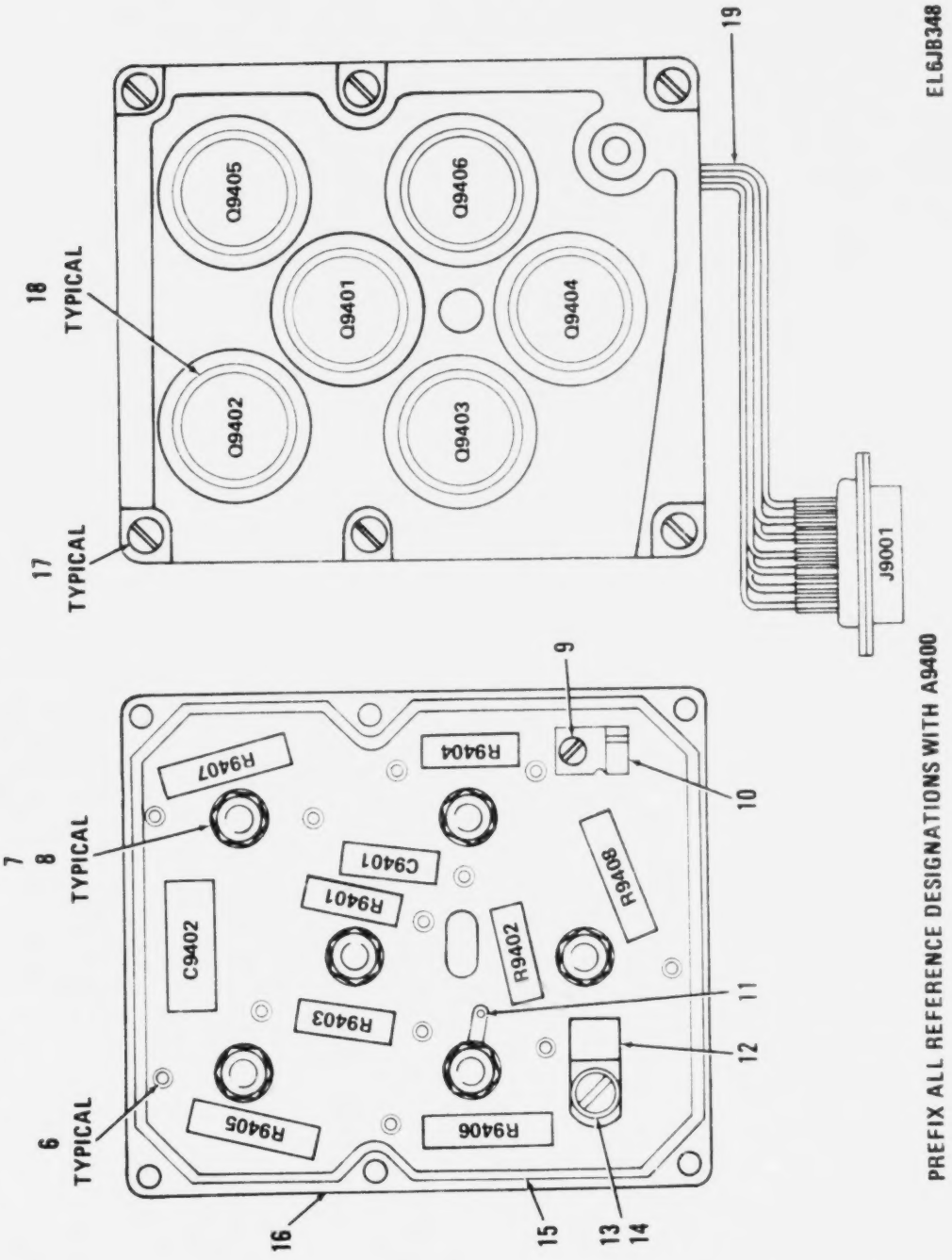

Figure 83. Semiconductor Device Assembly (Sheet 2 of 3).

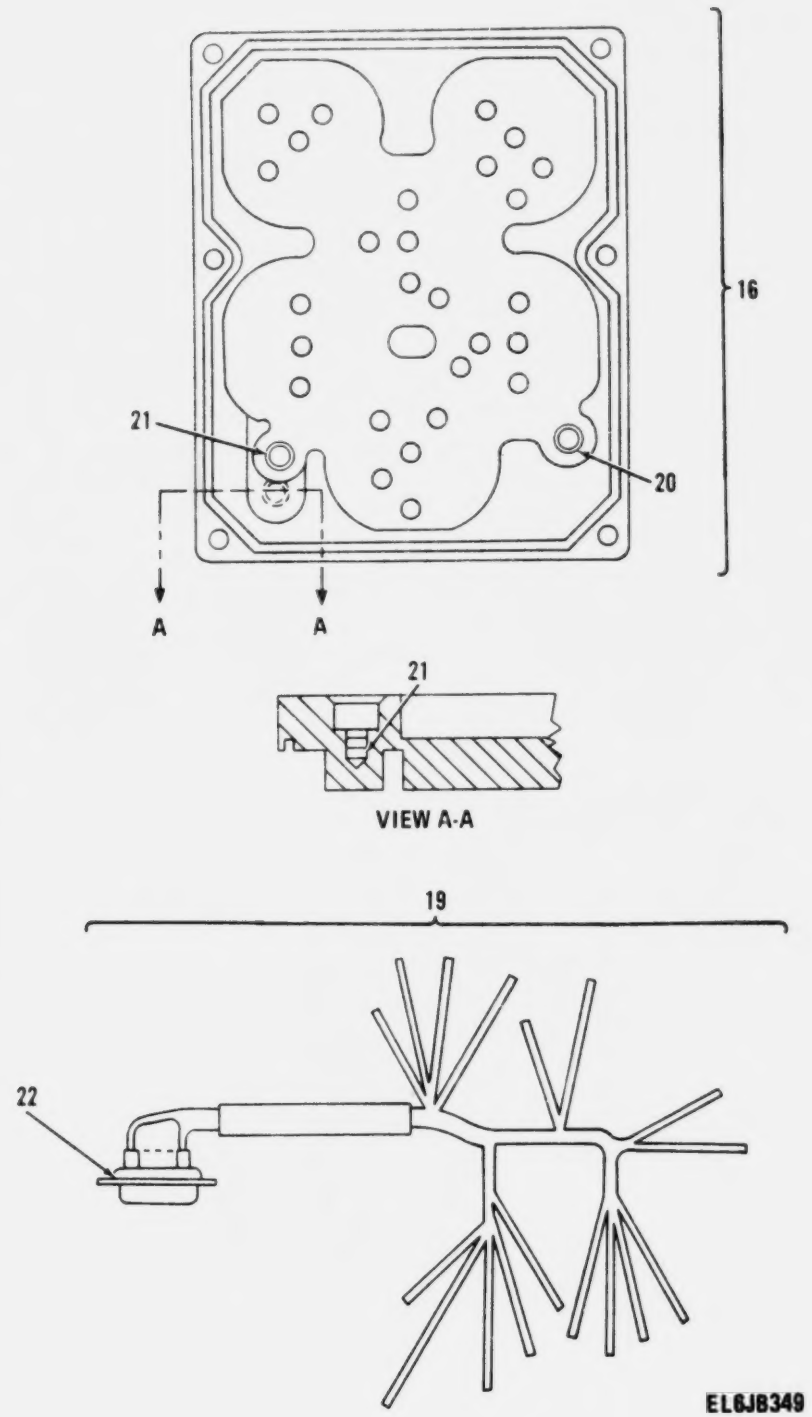

Figure 83. Semiconductor Device Assembly (Sheet 3 of 3).

(1) ILLUSTRATION (a) FIG NO	(b) ITEM NO	(2) SMR CODE	(3) NATIONAL STOCK NUMBER	(4) FSCM	(5) PART NUMBER	(6) DESCRIPTION / USABLE ON CODE	(7) U/M	(8) QTY INC IN UNIT
						GROUP 0107 SEMICONDUCTOR DEVICE ASSY		
						A9400 AND A9400A SM-D-413928		
83	1	PAFZZ	5910-00-058-5871	99515	EP-60-11	CAPACITOR,FIXED,MET .05 UF,PORM 5 PCT,200 VDCW	EA	1
83	2	XBHZZ		05844	412S	CAPACITOR,PPR DIEL .22 UF,PORM 10 PCT,100 VDCW	EA	1
83	3	PAFZZ	5961-00-926-7397	81349	JAN2N1412A	TRANSISTOR	EA	6
83	4	PAFZZ	5905-00-081-6135	81349	RW69V200	RESISTOR,FIXED,WIRE	EA	4
83	5	PAFZZ		81349	RW74UR180F	RESISTOR,FIXED WIRE	EA	4
83	6	PAFZZ	5940-00-051-6257	81349	SE079801	TERMINAL,STUD	EA	12
83	7	PAFZZ	5310-00-596-7691	96906	MS35335-32	WASHER,LOCK	EA	6
83	8	PAFZZ	5310-00-934-9751	96906	MS35650-302	NUT,PLAIN,HEXAGON	EA	6
83	9	PAFZZ	5305-00-405-8960	96906	MS35223-13	SCREW,MACHINE	EA	1
83	10	PAFZZ	5340-01-127-4139	80063	SM-B-413901	CLIP,SPRING TENSION	EA	1
83	11	PAFZZ	5940-00-681-8184	96906	MS0035431-8	TERMINAL,LUG	EA	1
83	12	PAFZZ	5340-00-995-6333	80205	NAS1397P3	CLAMP,LOOP	EA	1
83	13	PAFZZ	5305-00-984-4984	96906	MS35206-227	SCREW,MACHINE	EA	1
83	14	PAFZZ	5310-00-167-0816	88044	AN960-6	WASHER,FLAT	EA	1
83	15	PAFZZ	5330-00-138-4591	80063	SM-B-413930	PACKING,PREFORMED	EA	1
83	16	PAHHH		80063	SM-C-413937	MOUNTING PLATE ASSY	EA	1
83	17	PAFZZ	5305-00-823-5827	80063	SM-C-413884-1	SCREW,EXTERNALLY RE	EA	6
83	18	XBFZZ		80063	SM-B-481761	SEAL	EA	6
83	19	PAFHH		80063	SM-D-413935	WIRING HARNESS ASSY	EA	1
83	20	PAHZZ	5340-00-853-6424	73957	N11240-18	INSERT,SCREW THREAD	EA	1
83	21	PAHZZ	5340-00-823-5249	73957	NN13832-18	INSERT,SCREW THREAD	EA	2
83	22	PAHZA	5935-00-417-4206	81349	M24308/2-24	CONNECTOR,RECEPTACL 15 FEMALE CONTACTS	EA	1

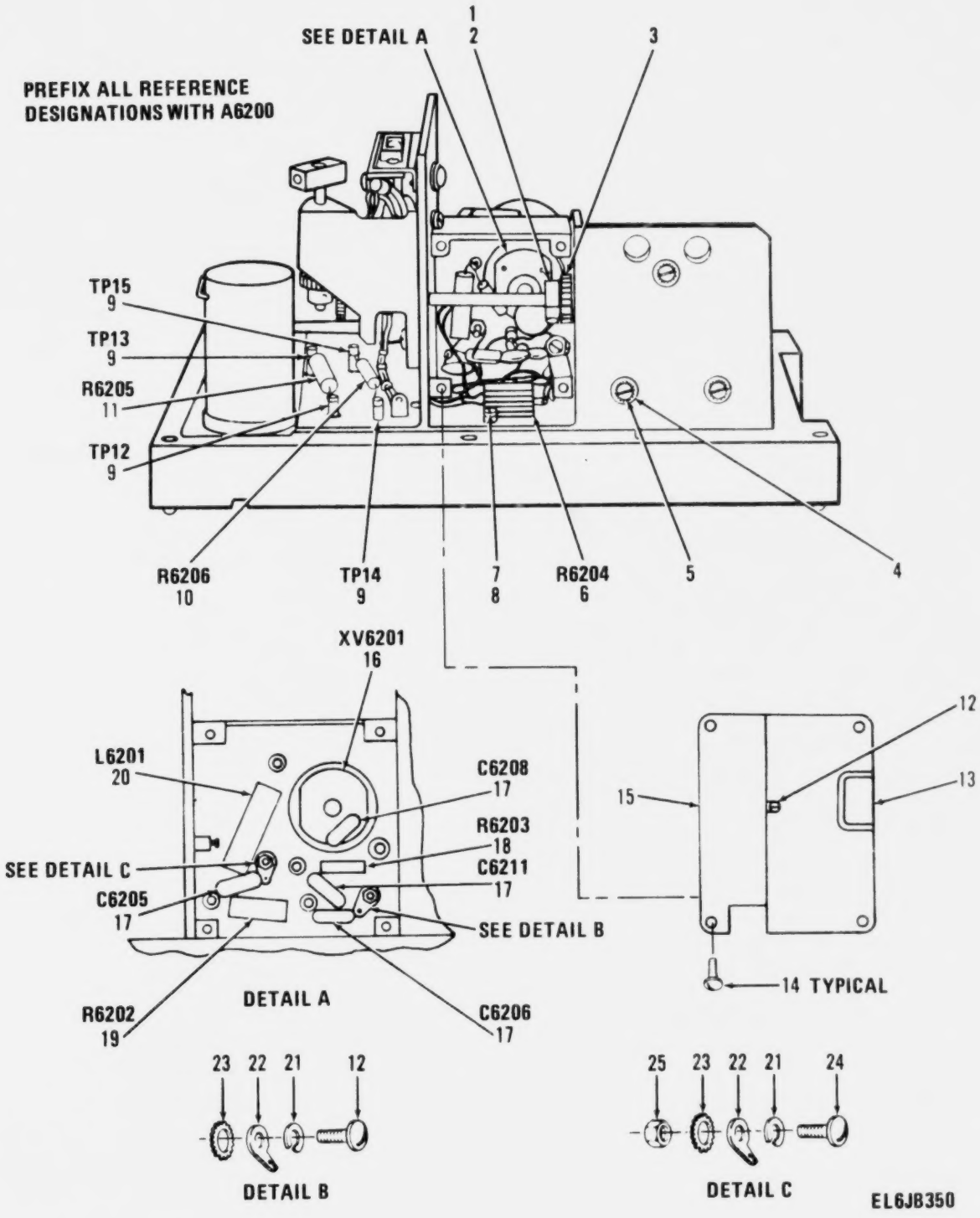

Figure 84. Power Amplifier Assembly (Sheet 1 of 4).

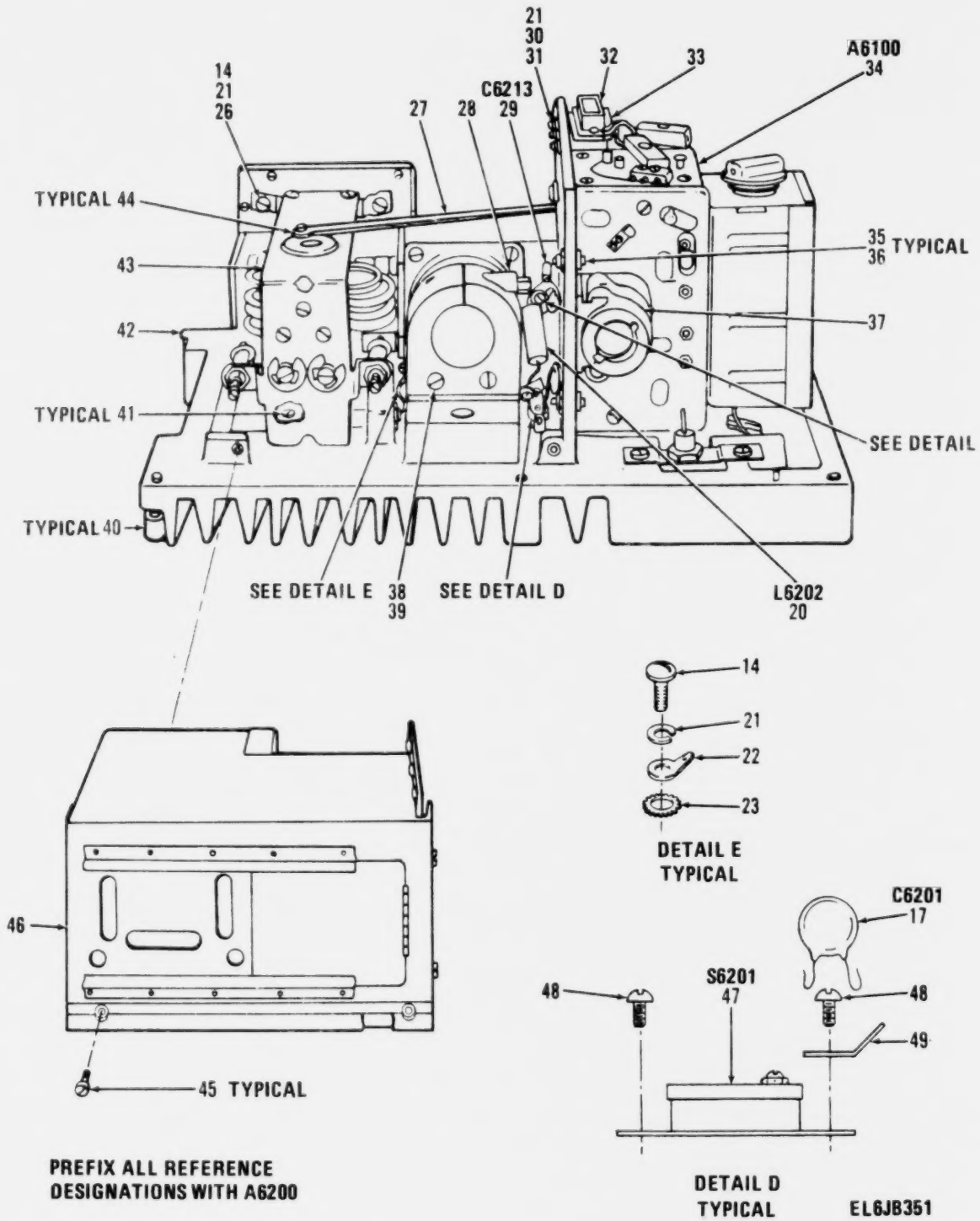

Figure 84. Power Amplifier Assembly (Sheet 2 of 4).

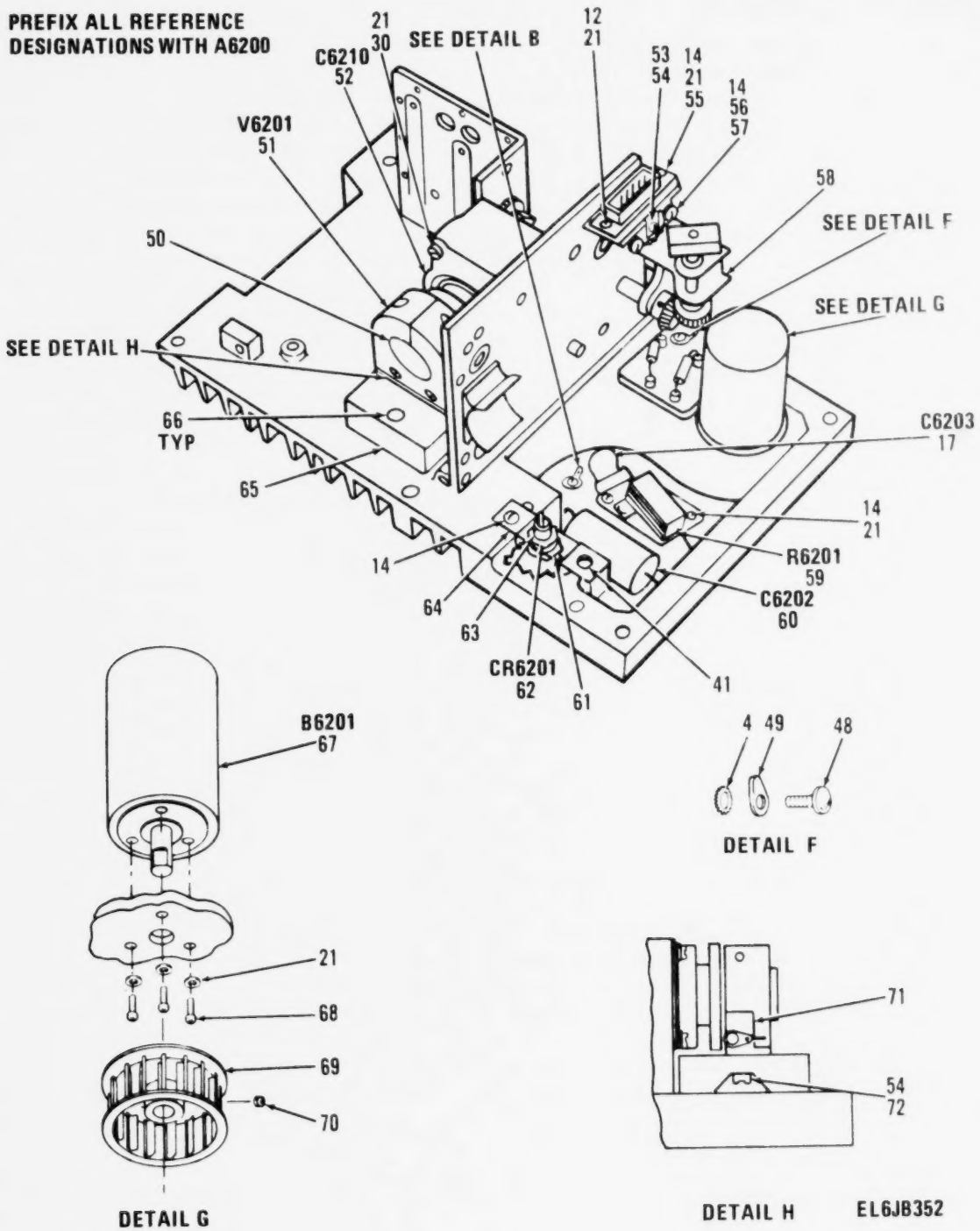

Figure 84. Power Amplifier Assembly (Sheet 3 of 4).

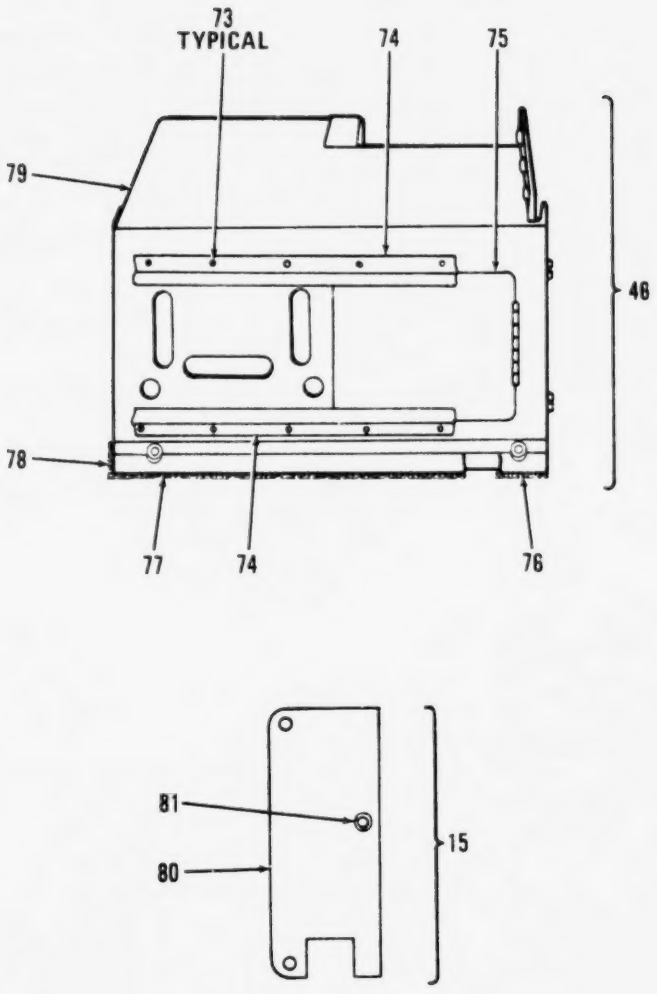

Figure 84. Power Amplifier Assembly (Sheet 4 of 4).

(1) ILLUSTRATION (a) FIG NO	(1) ILLUSTRATION (b) ITEM NO	(2) SMR CODE	(3) NATIONAL STOCK NUMBER	(4) FSCM	(5) PART NUMBER	(6) DESCRIPTION / USABLE ON CODE	(7) U/M	(8) QTY INC IN UNIT
						GROUP 0108 POWER AMPLIFIER ASSY		
						A6200 SM-D-439956		
84	1	PAFZZ	5820-00-853-5967	80063	SM-C-413899	CLAMP,HUB	EA	1
84	2	PAFZZ	5305-00-221-0347	80063	SM-C-413900-2	SCREW,CAP,SOCKET HE	EA	1
84	3	PAFZZ	3020-00-884-2457	80063	SM-C-413963	GEAR,SPUR	EA	1
84	4	PAFZZ	5310-00-209-0788	96906	MS35335-30	WASHER,LOCK	EA	3
84	5	PAFZZ	5305-00-984-4984	96906	MS35206-227	SCREW,MACHINE	EA	3
84	6	PAFZZ	5905-01-021-3105	81349	RER65F4021R	RESISTOR,FIXED,WIRE 4000 OHMS,PORM 3 PCT,10 WATT	EA	1
84	7	PAFZZ	5305-00-054-5637	96906	MS51957-3	SCREW,MACHINE	EA	2
84	8	PAFZZ	5310-00-543-5060	96906	MS35338-39	WASHER,LOCK	EA	2
84	9	PAFZZ	5940-00-082-4922	81349	SE18XE01	TERMINAL,STUD	EA	4
84	10	PAFZZ	5905-00-104-8336	81349	RCR20G104JS	RESISTOR	EA	1
84	11	PAFZZ	5905-00-484-0277	81349	RCR32G303JS	RESISTOR,FIXED,COMP	EA	1
84	12	PAHZZ	5305-00-993-0191	96906	MS35206-212	SCREW,MACHINE	EA	1
84	13	PAFZZ		80063	SM-C-413945	COVER	EA	1
84	14	PAFZZ	5305-00-405-8960	96906	MS35223-13	SCREW,MACHINE	EA	3
84	15	XBFZZ		80063	SM-B-414109	COVER ASSEMBLY	EA	1
84	16	PAHZA	5935-00-871-5066	80063	SM-D-413953	SOCKET,PLUG-IN ELEC	EA	1
84	17	PAFZZ	5910-00-822-5682	81349	CK62BX102K	7CAPACITOR,FIXED,CE	EA	6
84	18	PAFZZ	5905-00-106-9344	81349	RCR20G101JS	RESISTOR,FIXED,COMP	EA	1
84	19	PAFZZ	5905-00-247-8732	81349	RCR32G471JS	RESISTOR,FIXED,COMP	EA	1
84	20	PAFZZ	5950-00-885-8542	03615	45011	CHOKE,RADIO FREQUEN 7.0 UH,PORM 10 PCT INDUCTANCE AT 7.9 MHZ PORM 1 PCT	EA	2
84	21	PAHZZ	5310-00-543-2410	96906	MS35338-40	WASHER,LOCK	EA	3
84	22	PAFZZ	5940-00-614-0537	96906	MS35431-1	TERMINAL,LUG	EA	2
84	23	PAFZZ	5310-00-616-3554	96906	MS35335-29	WASHER,LOCK	EA	4
84	24	PAFZZ	5305-00-983-6730	96906	MS35206-218	SCREW,MACHINE	EA	1
84	25	PAFZZ	5310-00-934-9739	96906	MS35649-242	NUT,PLAIN,HEXAGON	EA	1
84	26	PAFZZ	5310-00-951-4679	96906	MS27183-3	WASHER,FLAT	EA	2
84	27	PAFZZ	5820-00-229-6629	80063	SM-B-413952	ARM,ACTUATOR	EA	1
84	28	PAFZZ	5305-00-823-5830	80063	SM-B-413962	SCREW,SHOULDER	EA	1
84	29	PAFZZ	5910-00-879-7989	72982	HD-15	CAPACITOR,FIXED,CER .001 UF,PORM 20 PCT,1500 VDCW	EA	1
84	30	PAHZZ	5305-00-558-4889	96906	MS35223-14	SCREW,MACHINE	EA	3
84	31	PAHZZ	5310-00-950-1310	96906	MS27183-4	WASHER,FLAT	EA	3
84	32	AHHHA		80063	SM-E-413971	WIRING ASSY,RF AMPL	EA	1
84	33	XBHZZ		80063	SM-B-413944	BRACKET	EA	1
84	34	PAFDA	5820-00-457-0571	80063	SM-D-414045	AMPLIFIER SUBASSEMB	EA	1
84	35	PAFZZ	5305-00-138-0333	80063	SM-B-413961	SCREW,MACHINE	EA	4
84	36	PAFZZ	5310-00-167-0816	88044	AN960-6	WASHER,FLAT	EA	4
84	37	PAFZZ	5340-00-871-5107	80063	SM-C-413955	CLIP,SPRING TENSION	EA	1

(1) ILLUSTRATION (a) FIG NO	(b) ITEM NO	(2) SMR CODE	(3) NATIONAL STOCK NUMBER	(4) FSCM	(5) PART NUMBER	(6) DESCRIPTION USABLE ON CODE	(7) U/M	(8) QTY INC IN UNIT
84	38	PAFZZ	5305-00-139-7010	80063	SM-C-413884-3	SCREW,EXTERNALLY RE	EA	2
84	39	PAFZZ	5310-00-045-4007	96906	MS35338-41	WASHER,LOCK	EA	2
84	40	PAFZZ	5305-00-823-5831	83512	S7847	SCREW,EXTERNALLY RE	EA	6
84	41	PAFZZ	5305-00-984-4983	96906	MS24584-23	SCREW,MACHINE	EA	1
84	42	XAFDD		80063	SM-D-413994	AMPL ASSY	EA	1
84	43	PDDDD	5820-00-457-0570	80063	SM-D-413999	TANK CIRCUIT ASSEMB	EA	1
84	44	PAFZZ	5365-00-282-5322	79136	S133-12	RING,RETAINING	EA	3
84	45	PAFZZ		96906	MS35223-11	SCREW,MACHINE	EA	19
84	46	XAFZZ		80063	SM-D-439953	COVER ASSY	EA	1
84	47	PAFZZ	5930-00-884-2572	80063	SM-D-413958	SWITCH,THERMOSTATIC SPST NO,CONTACT RATING NON IND LOAD 10 MILLIAMP AT 30 VDC	EA	1
84	48	PAFZZ	5305-00-984-4982	96906	MS35206-225	SCREW,MACHINE	EA	2
84	49	PAFZZ	5940-00-050-2308	96906	MS35431-3	TERMINAL,LUG	EA	2
84	50	PAFZA	5820-00-884-2458	80063	SM-C-413951	HEAT SINK, ELECTRIC	EA	1
84	51	PAFZZ	5960-00-892-3808	81349	JAN7843	ELECTRON TUBE	EA	1
84	52	PAFZZ	5910-00-884-2600	72982	2929-000-432K	CAPACITOR,FIXED,MIC 4300 UUF,PORM 10 PCT,500 VDCW	EA	1
84	53	PAFZZ	5305-00-984-6191	96906	MS35206-243	SCREW,MACHINE	EA	2
84	54	PAFZZ	5310-00-045-3299	96906	MS35338-42	WASHER,LOCK	EA	2
84	55	XBHZZ		80063	SM-C-374813	BRACKET	EA	1
84	56	PAFZZ	5940-00-853-9850	80063	SM-B-414126	TERMINAL,LUG	EA	4
84	57	PAFZZ	5310-00-939-1063	96906	MS35335-85	WASHER,LOCK	EA	1
84	58	PAFHH	5820-00-884-2464	80063	SM-D-413982	GEAR,SET ASSEMBLY	EA	1
84	59	PAFZZ	5905-00-511-1839	81349	RER70F43R2R	RESISTOR,FIXED,WIRE	EA	1
84	60	PAFZZ	5910-00-484-3743	00656	P323S1026	CAPACITOR,FIXED,PAP 0.12 UF,PORM 5 PCT,330 VRMS AT 400 HZ RATED VOLTAGE	EA	1
84	61	PAFZZ	5310-00-045-3296	96906	MS35338-43	WASHER,LOCK	EA	1
84	62	PAFZZ	5961-00-943-4088	81349	JAN1N3998RA	SEMICONDUCTOR DEVIC	EA	1
84	63	PAFZZ	5310-00-934-9751	96906	MS35650-302	NUT,PLAIN,HEXAGON	EA	1
84	64	XBFZZ		80063	SM-B-374814	BRACKET	EA	1
84	65	PAFZZ	5970-00-892-3196	80063	SM-D-413949	INSULATOR,PLATE	EA	1
84	66	PAFZZ	5305-00-984-6193	96906	MS35206-245	SCREW,MACHINE	EA	2
84	67	PAFZZ	6105-00-823-2605	80063	SM-C-374852	MOTOR,ALTERNATING C 115 VRMS,420 HZ INPUT POWER,9300 RPM, .006 HP	EA	1
84	68	PAFZZ	5305-00-889-2997	96906	MS35206-215	SCREW,MACHINE	EA	3
84	69	PAFZZ	4140-00-892-5952	60380	AA-116-020-1	IMPELLER,FAN,CENTRI	EA	1
84	70	PAFZZ	5305-00-719-5342	96906	MS51963-34	SETSCREW	EA	1
84	71	PAFZZ	5999-00-901-4689	80063	SM-C-413950	CONTACT,ELECTRICAL	EA	1
84	72	PAFZZ	5305-00-984-6194	96906	MS35206-246	SCREW,MACHINE	EA	2
84	73	XDDZZ		90925	A500	RIVET,TUBULAR	EA	10
84	74	XDDZZ		80063	SM-C-414108	SPRING	EA	2
84	75	PAFZZ		80063	SM-C-439961	DOOR	EA	1

(1) ILLUSTRATION (a) FIG NO	(1) ILLUSTRATION (b) ITEM NO	(2) SMR CODE	(3) NATIONAL STOCK NUMBER	(4) FSCM	(5) PART NUMBER	(6) DESCRIPTION USABLE ON CODE	(7) U/M	(8) QTY INC IN UNIT
84	76	XBFZZ		07000	10115-0.0531	STRIP,RFI	EA	1
84	77	XBFZZ		07000	10115-4.250	STRIP,RFI	EA	1
84	78	PAFZZ	5999-00-767-0569	07700	10115	WIRE MESH,KNITTED	EA	1
84	79	PAFZZ		80063	SM-D-439955	COVER	EA	1
84	80	XAFZZ		30655	22NCFMA1-40	NUT,SLFLKG	EA	1
84	81	XAFZZ		80063	SM-B-414111	COVER	EA	1

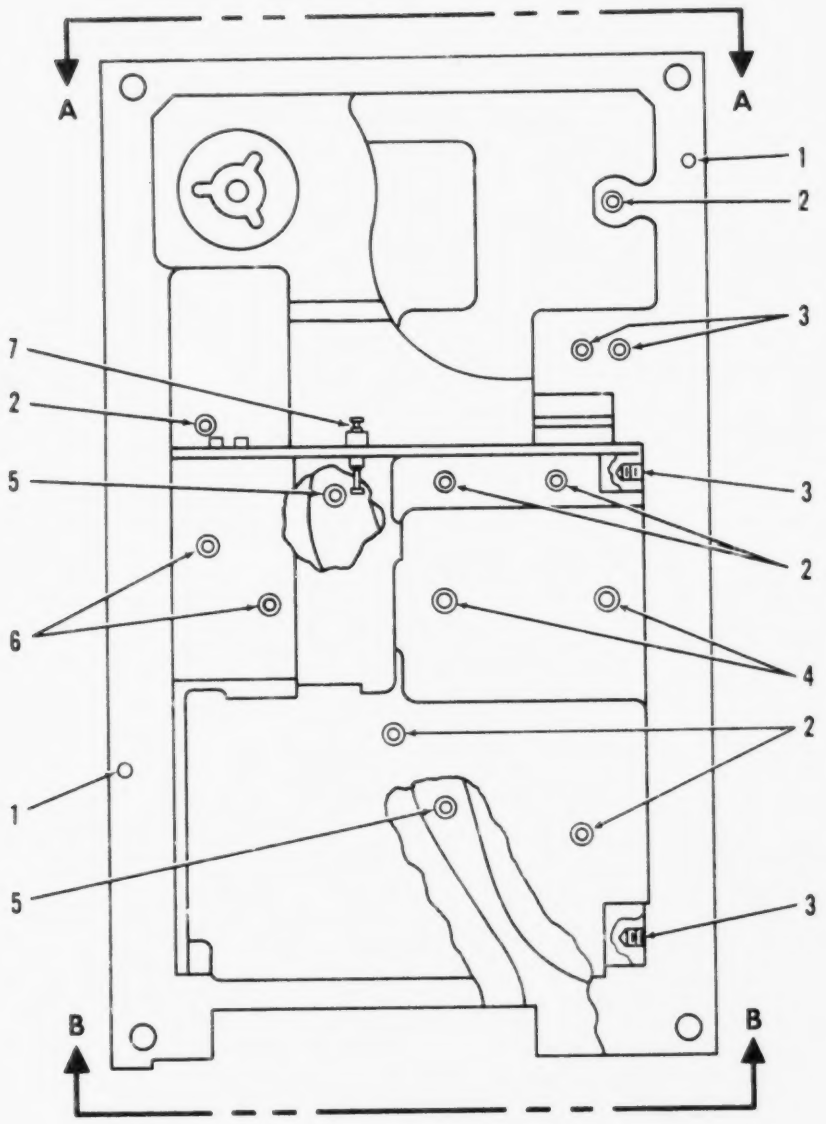

Figure 85. RF Amplifier Assembly, Final Amplifier (Sheet 1 of 3).

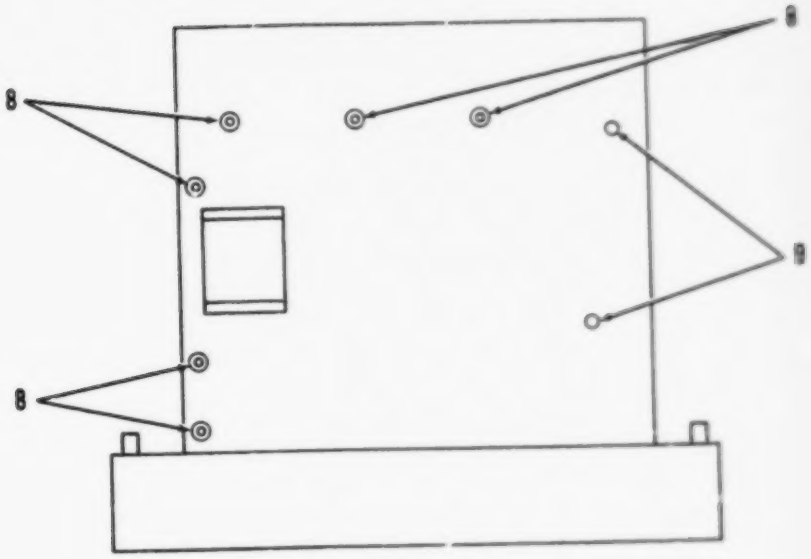

VIEW A-A

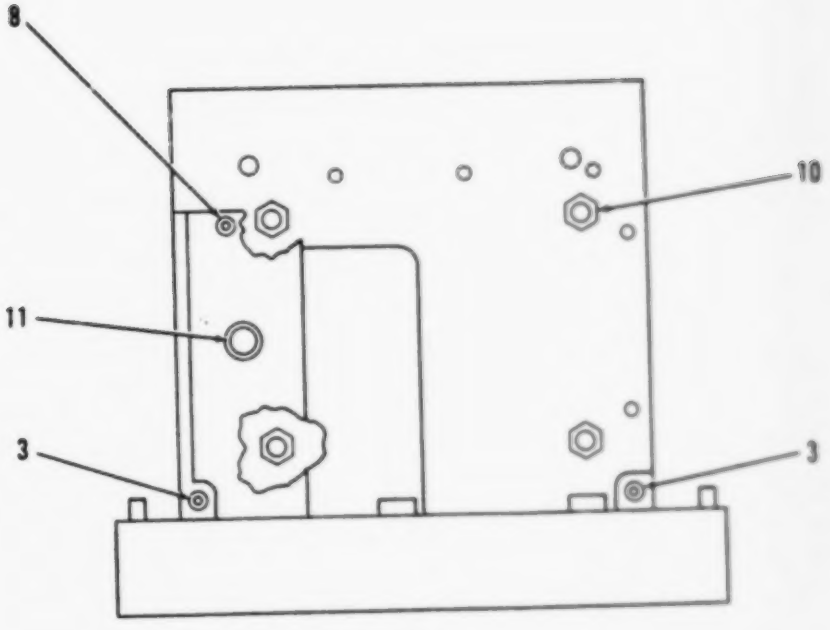

VIEW B-B

EL6JB260

Figure 85. RF Amplifier Assembly, Final Amplifier (Sheet 2 of 3).

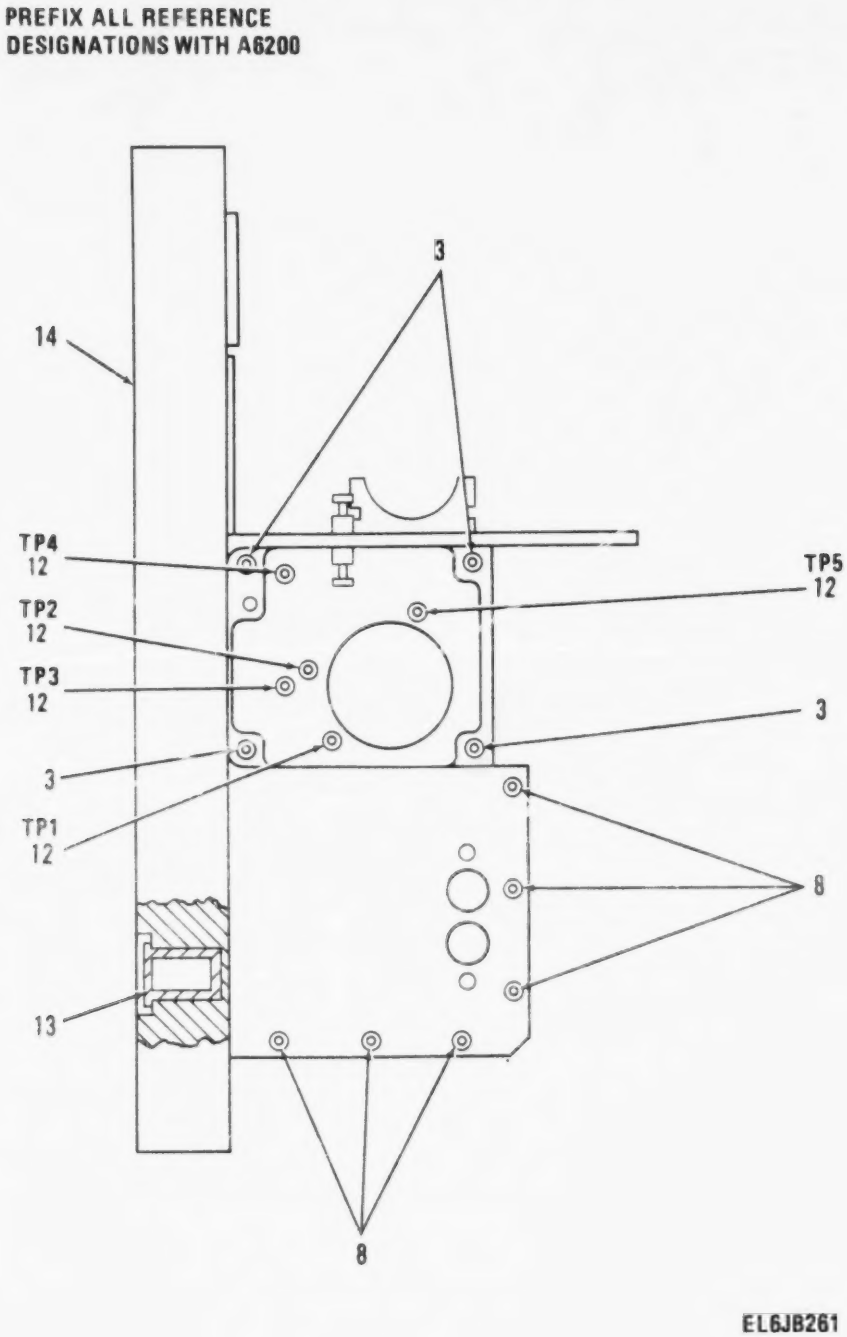

Figure 85. RF Amplifier Assembly, Final Amplifier (Sheet 3 of 3).

(1) ILLUSTRATION (a) FIG NO	(1) ILLUSTRATION (b) ITEM NO	(2) SMR CODE	(3) NATIONAL STOCK NUMBER	(4) FSCM	(5) PART NUMBER	(6) DESCRIPTION USABLE ON CODE	(7) U/M	(8) QTY INC IN UNIT
						GROUP 010801 RF AMPLIFIER ASSY (FINAL AMPLIFIER) A6201 SM-D-613994		
85	1	PADZZ		73957	GP4-125X375-50	PIN,GROOVED HEADLES	EA	2
85	2	PAHZZ	5340-00-823-5249	73957	NM13832-18	INSERT,SCREW THREAD	EA	6
85	3	PAHZZ	5340-00-853-6424	73957	N11240-18	INSERT,SCREW THREAD	EA	10
85	4	PAHZZ	5340-00-823-5327	73957	NM16432-18	INSERT,SCREW THREAD	EA	2
85	5	PAHZZ	5340-00-853-6711	73957	N13832-18	INSERT,SCREW THREAD REPAIR	EA	2
85	6	XDDZZ	5340-00-823-5334	73957	08656-18	INSERT,SCREW THREAD	EA	2
85	7	PAHZZ	5940-00-271-5577	98291	FT-1000	TERMINAL,FEEDTHRU;I	EA	1
85	8	PAHZZ	5340-00-763-0192	29372	SPA0440S	INSERT,SCREW THREAD	EA	13
85	9	PADZZ	5315-00-823-8762	80063	SM-C-613906-2	6PIN,GROOVED,HEADLE	EA	2
85	10	PAHZZ	5310-00-297-9067	72962	22NC3-62	NUT,SELF-LOCKING,CL	EA	4
85	11	PAHZZ	3120-00-884-2469	80063	SM-B-613898	BEARING,SLEEVE	EA	1
85	12	PAFZZ	5940-00-957-2683	81349	SE079802	TERMINAL,STUD	EA	6
85	13	XDDZZ		80063	SM-B-613997	BUSHING,SLEEVE	EA	1
85	14	XDDZZ		80063	SM-E-613998	HOUSING,AMPL	EA	1

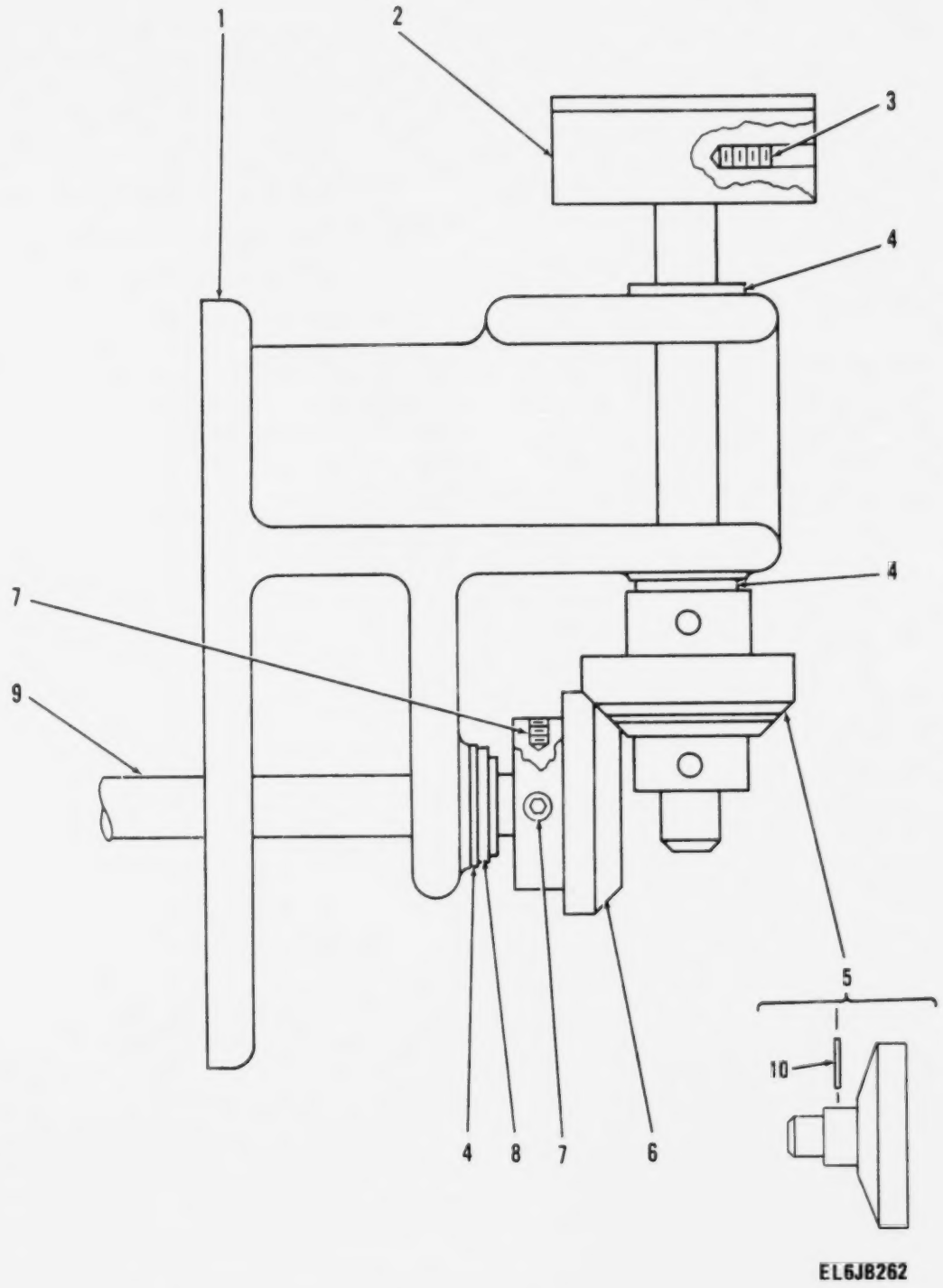

Figure 86. Gear Set Assembly

(1) ILLUSTRATION (a) FIG NO	(1) ILLUSTRATION (b) ITEM NO	(2) SMR CODE	(3) NATIONAL STOCK NUMBER	(4) FSCM	(5) PART NUMBER	(6) DESCRIPTION USABLE ON CODE	(7) U/M	(8) QTY INC IN UNIT
						GROUP 010802 GEAR SET		
						MP6201 SM-D-413982		
86	1	XBHZZ		80063	SM-D-413985	SUPPORT,GEAR	EA	1
86	2	PAHZZ	5820-00-229-6617	80063	SM-B-413984	COUPLER,LINKAGE	EA	1
86	3	PAHZZ	5305-00-719-5339	96906	MS51963-22	SETSCREW	EA	1
86	4	PAHZZ	3120-00-884-2469	80063	SM-B-413898	BEARING,SLEEVE	EA	3
86	5	PAHHH	5820-00-932-9931	80063	SM-C-413988	GEAR ASSEMBLY	EA	1
86	6	PAHZZ	3020-01-125-0471	80063	SM-C-413986	GEAR,BEVEL	EA	1
86	7	PAHZZ	5305-00-719-5330	96906	MS51963-21	SETSCREW	EA	2
86	8	PAHZZ	5365-00-598-1493	79136	5103-18-H	RING,RETAINING	EA	1
86	9	XBHZZ		80063	SM-C-413987	SHAFT,STRAIGHT	EA	1

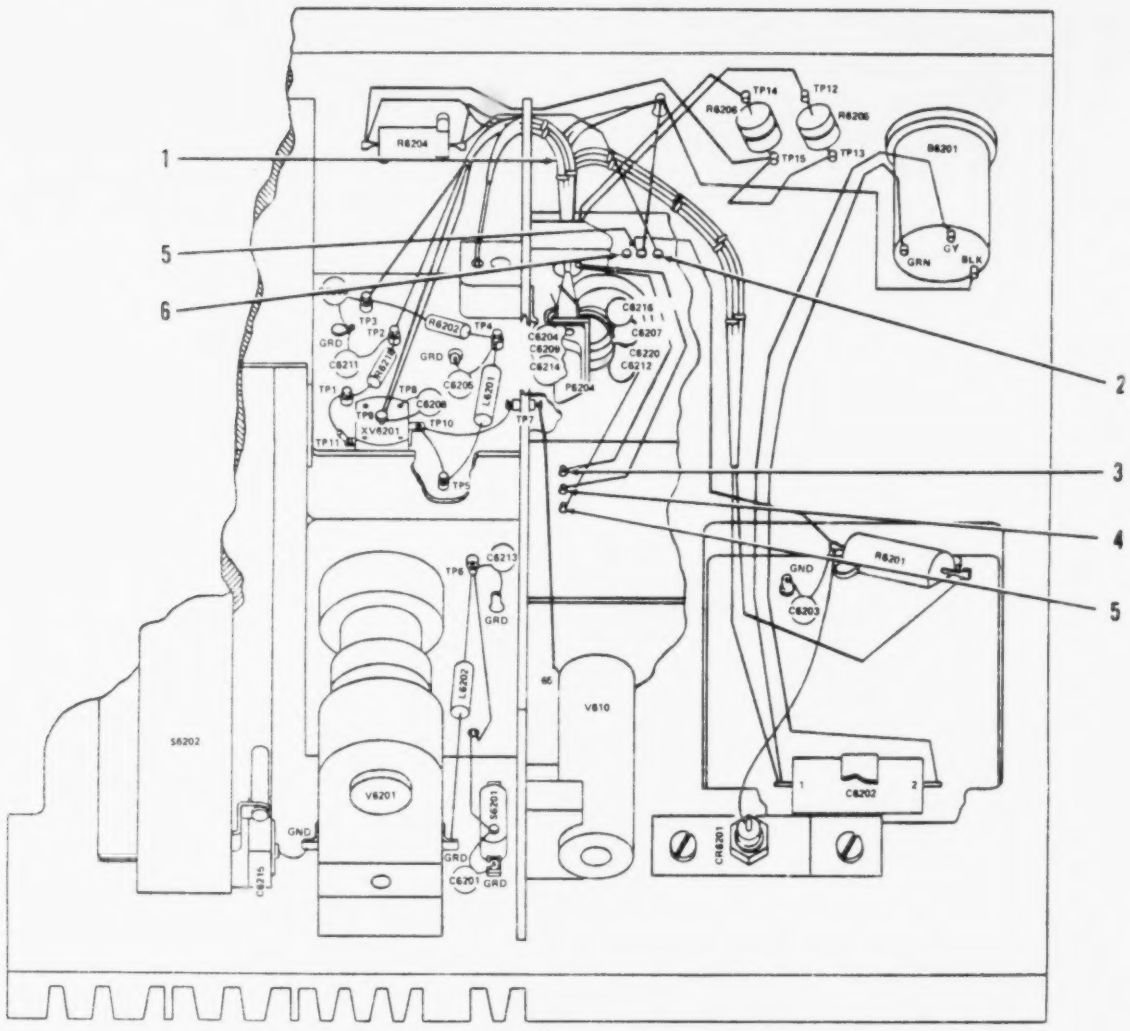

EL6JB263

Figure 87. Wiring Assembly.

(1) ILLUSTRATION (a) FIG NO	(1) ILLUSTRATION (b) ITEM NO	(2) SMR CODE	(3) NATIONAL STOCK NUMBER	(4) FSCM	(5) PART NUMBER	(6) DESCRIPTION / USABLE ON CODE	(7) U M	(8) QTY INC IN UNIT
						GROUP 010803 WIRING ASSEMBLY		
						SM-E-413971		
87	1	AHHHA		80063	SM-D-413975	WIRING HARNESS ASSY	EA	1
87	2	PAFZZ	5935-00-807-0211	37695	S413981-1	JACK,TIP	EA	1
87	3	XDFZZ	5935-00-813-3484	98291	SKT-14-GRN	JACK,TIP	EA	1
87	4	PAFZZ	5935-00-849-5110	98291	SKT14YELLOW	JACK,TIP	EA	1
87	5	PAFZZ	5935-00-013-9837	37695	S413981-5	JACK,TIP	EA	2
87	6	PAFZZ	5935-00-849-5111	37695	S413981-3	JACK,TIP	EA	1

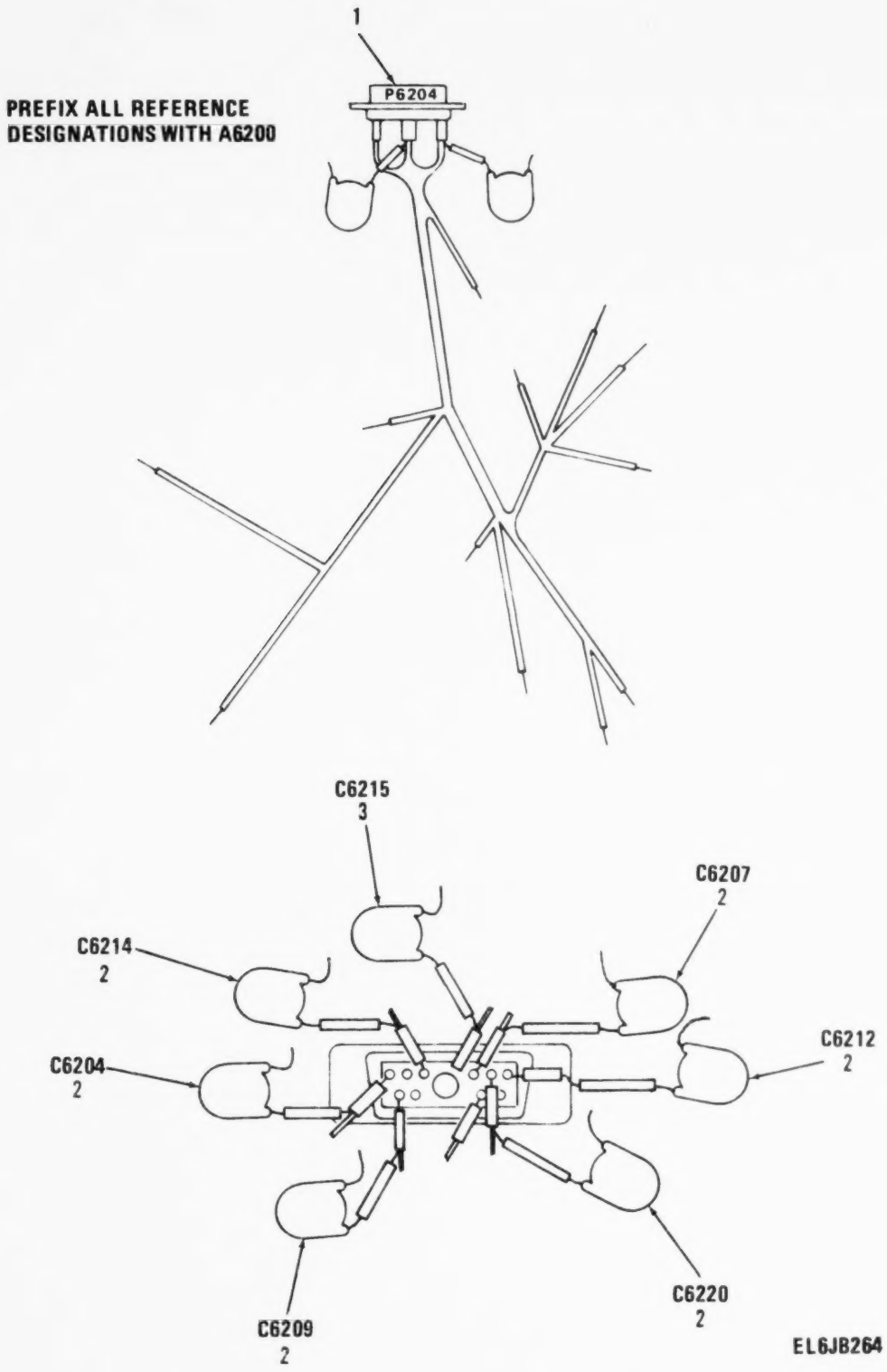

Figure 88. Wiring Harness Assembly (Sheet 1 of 2).

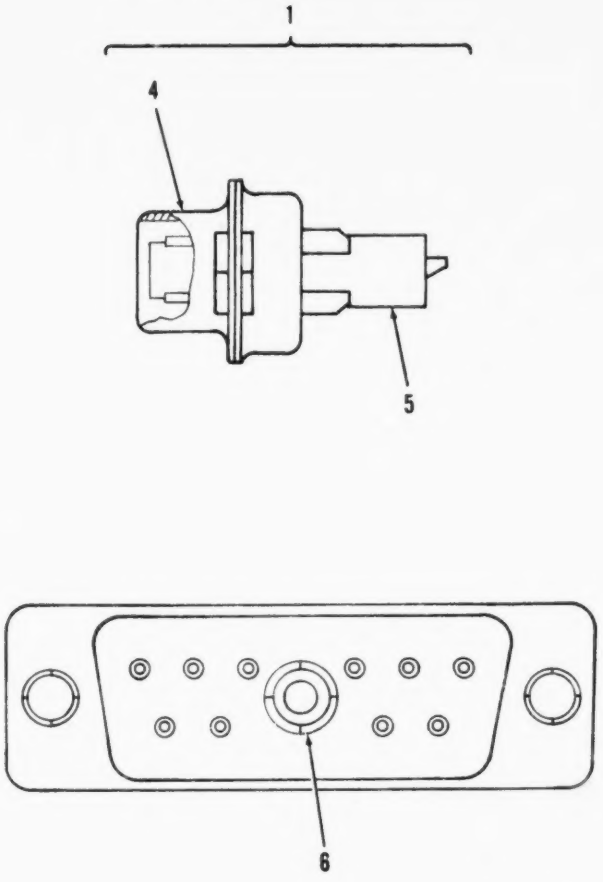

Figure 88. Wiring Harness Assembly (Sheet 2 of 2).

(1) ILLUSTRATION (a) FIG NO	(b) ITEM NO	(2) SMR CODE	(3) NATIONAL STOCK NUMBER	(4) FSCM	(5) PART NUMBER	(6) DESCRIPTION USABLE ON CODE	(7) U/M	(8) QTY INC IN UNIT
						GROUP 01080301 WIRING HARNESS ASSY		
						SM-E-413975		
88	1	AHHHA		80063	SM-D-413977	CONNECTOR ASSY 10 PIN CONTACTS,1 RF CONTACT.....	EA	1
88	2	PAHZZ	5910-00-251-1446	72982	801-000X5F0-102K	CAPACITOR,FIXED,CER .001 UF,PORM 20 PCT, .500 VDCW.....	EA	6
88	3	PAHZZ	5910-00-879-7989	72982	HD-15	CAPACITOR,FIXED,CER .001 UF,PORM 20 PCT,1500 VDCW.....	EA	1
88	4	PAHHA	5935-00-054-5853	71468	DAM-11W1P	CONNECTOR,RECEPTACL.....	EA	1
88	5	PAHZA		80063	SM-C-414120-1	CONTACT,ELECTRICAL.....	EA	1
88	6	PAHZZ		71468	051380-0000	STABILIZER.....	EA	1

VB

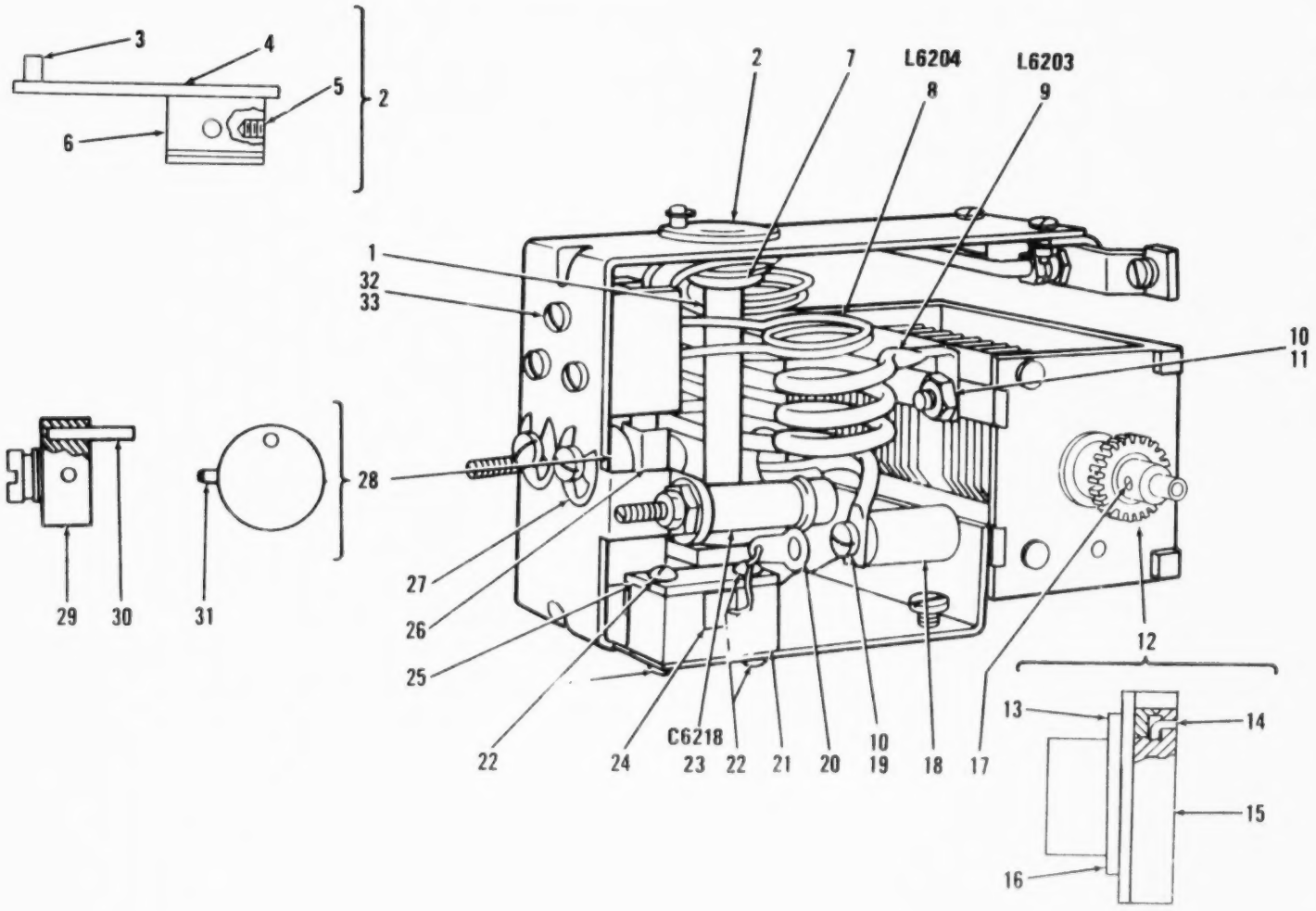

PREFIX ALL REFERENCE DESIGNATIONS WITH A6200

EL6JB266

Figure 89. Tank Circuit Assembly (Sheet 1 of 2).

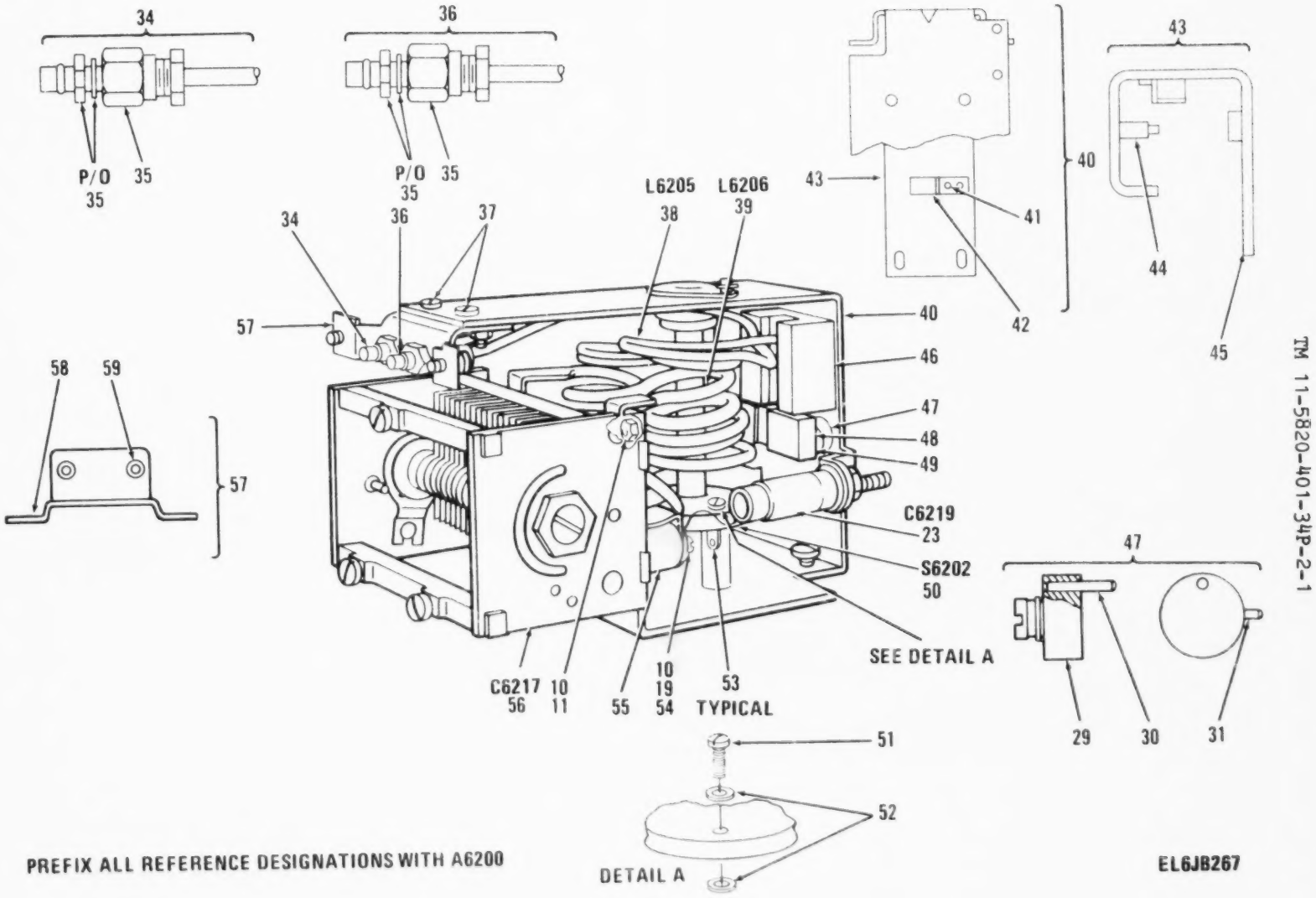

Figure 89. Tank Circuit Assembly (Sheet 2 of 2).

(1) ILLUSTRATION (a) FIG NO	(b) ITEM NO	(2) SMR CODE	(3) NATIONAL STOCK NUMBER	(4) FSCM	(5) PART NUMBER	(6) DESCRIPTION USABLE ON CODE	(7)	(8)
						GROUP 01 0909 TANK CIRCUIT ASSY		
						20201 SM-D-613999		
89	1	PAFZZ	5355-00-823-9798	80063	SM-D-614009	EXTENSION SHAFT	00	1
89	2	PAFZZ	5930-00-884-2578	80063	SM-C-614007	ARM,SWITCH ACTUATOR	00	1
89	3	XDDZZ		80063	SM-C-614007-9	SHAFT,STRAIGHT	00	1
89	4	XDDZZ		80063	SM-C-614007-1	PLATE	00	1
89	5	PAFZZ	5305-00-139-7015	80063	SM-D-614008	SETSCREW	00	1
89	6	XDDZZ		80063	SM-C-614007-2	HUB	00	1
89	7	PAFZZ	5365-00-866-2392	79136	5103-50H	RING,RETAINING	00	1
89	8	PAHZZ	5950-00-823-3233	80063	SM-D-614016	COIL,RADIO FREQUENC 2 TURNS CLOCKWISE CLOSE WOUND	00	1
89	9	PAHZA	5950-00-823-3236	80063	SM-C-614001	COIL,RADIO FREQUENC 3 COMPLETE CLOCKWISE TURNS	00	1
89	10	PAHZZ	5310-00-045-4007	96906	MS35338-41	WASHER,LOCK	00	1
89	11	PAHZZ	5310-00-013-4530	96906	MS35649-62	NUT,PLAIN,HEXAGON	00	1
89	12	PAFZZ	3020-00-246-4309	80063	SM-D-614010	GEAR,ANTIBACKLASH,S	00	1
89	13	PAFZZ	5365-00-598-1493	79136	5103-10-M	RING,RETAINING	00	1
89	14	PAFZZ		80393	813064-6	RING,RETAINING	00	1
89	15	XDDZZ		80063	SM-C-614021	GEAR,SPUR	00	1
89	16	XAFZZ		80063	SM-C-614020	GEARSHAFT,SPUR	00	1
89	17	PAFZZ	5305-00-336-2152	88044	AN565D6H2	SETSCREW	00	2
89	18	PAHZZ	5310-00-823-8760	80063	SM-D-614014-2	NUT,PLAIN,ROUND	00	1
89	19	PAHZZ	5305-00-984-4984	96906	MS35206-227	SCREW,MACHINE	00	2
89	20	PAHZZ	5940-00-150-4602	80063	SM-D-614004-1	TERMINAL,LUG	00	1
89	21	XBHZZ		80063	SM-D-614012	BRACKET	00	1
89	22	PAFZZ	5305-00-833-8624	82402	400425	SCREW,MACHINE	00	2
89	23	PAFZZ	5910-00-786-8780	81349	PC370100	CAPACITOR,VARIABLE	00	1
89	24	PAFZZ	5910-00-892-3048	95275	V143-D68B22T102A	CAPACITOR,FIXED,CER 1000 UF,PLUS 20 PCT,2KV DCWV AT 25 DEG C	00	1
89	25	XBFZZ		80063	SM-D-614011	INSULATOR,PLATE	00	1
89	26	PAHZZ	5820-00-884-2452	80063	SM-D-614033	SLUG	00	1
89	27	PAHZZ	5365-00-289-2114	96906	MS16624-1025	RING,RETAINING	00	1
89	28	PAHHH	5820-00-884-2453	80063	SM-D-614038	ACTUATOR,COIL	00	1
89	29	PAHZZ	5820-00-229-6616	80063	SM-D-614040	DISK	00	1
89	30	XAHZZ		80063	SM-C-613906-4	PIN,SER HOLD	00	1
89	31	PAHZZ	5315-00-847-3735	96906	MS16562-190	PIN,SPRING	00	1
89	32	PAHZZ	5305-01-126-7310	80063	SM-D-283606	SCREW,MACHINE	00	3
89	33	PAHZZ	5310-00-543-2610	96906	MS35338-40	WASHER,LOCK	00	3
89	34	PAHHA	5995-00-823-2597	80063	SM-D-614043-GR1	CABLE ASSEMBLY,RADI	00	1
89	35	PAHZA	5935-00-901-4698	74868	27-32-1001	CONNECTOR,RECEPTACL	00	1
89	36	PAHHA	5995-00-823-2596	80063	SM-D-614043-GR2	CABLE ASSEMBLY,RADI	00	1
89	37	PAHZZ	5305-00-405-8960	96906	MS35223-13	SCREW,MACHINE	00	2

(1) ILLUSTRATION (a) FIG NO.	(1) ILLUSTRATION (b) ITEM NO.	(2) SMR CODE	(3) NATIONAL STOCK NUMBER	(4) FSCM	(5) PART NUMBER	(6) DESCRIPTION USABLE ON CODE	(7) U/M	(8) QTY INC IN UNIT
89	38	PAHZZ	5950-00-823-3235	80063	SM-B-414015	COIL,RADIO FREQUENC 2 TURNS COUNTERCLOCKWISE CLOSE WOUND....	EA	1
89	39	PAHZA	5950-00-823-3234	80063	SM-C-414002	COIL,RADIO FREQUENC 4 COMPLETE CLOCKWISE TURNS.....	EA	1
89	40	XDDDD		80063	SM-C-414022	BRACKET ASSEMBLY.....	EA	1
89	41	XDDZZ		08544	SE24SL PL	EYELET,MTLC.....	EA	2
89	42	XDDZZ		80063	SM-B-414024	CLIP.....	EA	1
89	43	XDDDD		80063	SM-C-414025	BRACKET ASSEMBLY.....	EA	1
89	44	XDDZZ		80063	SM-B-414027	TERMINAL,STUD.....	EA	2
89	45	XDDZZ		80063	SM-D-414028	PANEL.....	EA	1
89	46	PAHZZ	5820-00-873-1953	80063	SM-C-414003	GUIDE,COUPLING COIL.....	EA	1
89	47	PAHZZ	5820-00-884-2454	80063	SM-B-414041	ACTUATOR,COIL.....	EA	1
89	48	PAHZZ	5820-00-953-4891	80063	SM-B-413767	SPRING,RETAINING.....	EA	1
89	49	PAHZZ	5820-00-884-2451	80063	SM-B-414036	SLIDE.....	EA	1
89	50	PAHZA	5930-00-823-0758	80063	SM-D-414005	SWITCH SECTION,ROTA.....	EA	1
89	51	PAHZZ	5305-00-558-4889	96906	MS35223-14	SCREW,MACHINE.....	EA	2
89	52	PAHZZ	5970-00-001-1476	80063	SM-B-414017	INSULATOR,WASHER.....	EA	4
89	53	PAHZZ	5940-00-177-7974	96906	MS77070-1	TERMINAL,LUG.....	EA	2
89	54	PAHZZ	5940-00-150-4604	80063	SM-B-414004-2	TERMINAL,LUG 1 SECTION,4 POLE,2 POSOTION,SHORTING TYPE CONTACTS.....	EA	1
89	55	PAHZZ	5310-00-823-8761	80063	SM-B-414014-1	NUT,PLAIN,ROUND.....	EA	1
89	56	PAHZA	5910-00-892-3054	80063	SM-D-414013	CAPACITOR,VARIABLE,.....	EA	1
89	57	XBHDD		80063	SM-B-414030	BRACKET ASSEMBLY.....	EA	1
89	58	XDDZZ		80063	SM-C-414032	BRACKET.....	EA	1
89	59	PAHZZ	5305-00-405-8960	96906	MS35223-13	SCREW,MACHINE.....	EA	2

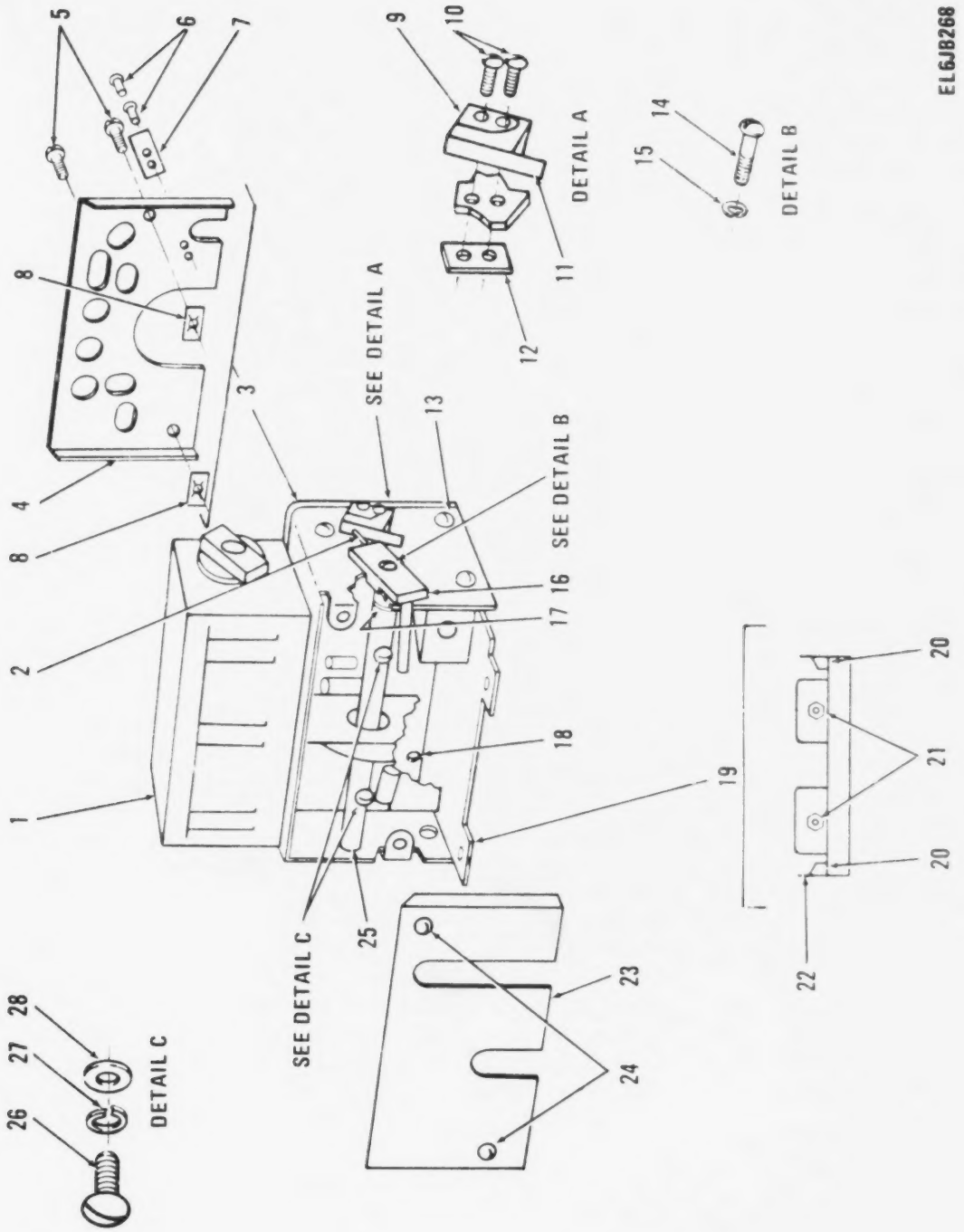

Figure 90. Amplifier Subassembly, Driver (Sheet 1 of 2).

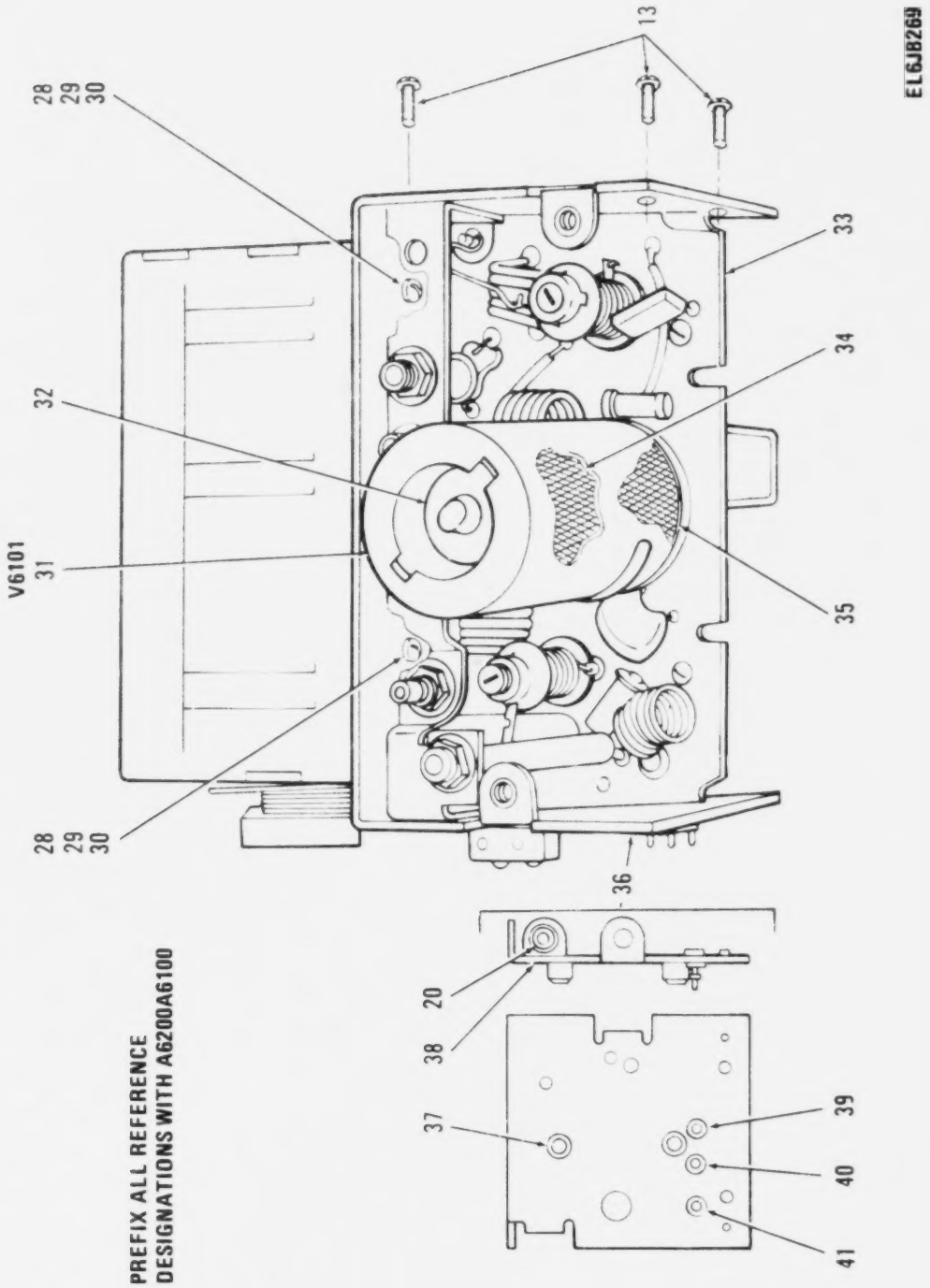

Figure 90. Amplifier Subassembly, Driver (Sheet 2 of 2).

(1) ILLUSTRATION (a) FIG NO	(b) ITEM NO	(2) SMR CODE	(3) NATIONAL STOCK NUMBER	(4) FSCM	(5) PART NUMBER	(6) DESCRIPTION / USABLE ON CODE	(7) U M	(8) QTY INC IN UNIT
						GROUP 010805 AMPLIFIER SUBASSEMBLY		
						(DRIVER) A6100 SM-D-414045		
90	1	PADDA	5820-00-884-2461	80063	SM-D-414048	TUNER,RADIO FREQUEN	EA	1
90	2	PAFZZ	5315-00-058-9698	96906	MS16562-191	PIN,SPRING	EA	1
90	3	PAFDD		80063	SM-C-414053	COVER ASSY	EA	1
90	4	PADZZ		80063	SM-D-414055	COVER	EA	1
90	5	PAFZZ	5305-00-138-0331	80063	SM-C-413531-5	SCREW,EXTERNALLY RE	EA	2
90	6	XDDZZ		08544	SE23SL PL	EYELET,MTLC	EA	2
90	7	XDDZZ		80063	SM-B-413539	CLIP	EA	1
90	8	PAFZZ		78553	C-18695SS-012	NUT,SHEET SPRING	EA	2
90	9	PAFZZ	5930-00-803-4570	96906	MS24547-1	SWITCH,SENSITIVE	EA	1
90	10	PAFZZ	5305-00-989-0682	96906	MS35206-205	SCREW,MACHINE	EA	2
90	11	PAFZZ	5930-00-823-0764	91929	JX-46	ADAPTER,SWITCH ACTU	EA	1
90	12	PAFZZ	5310-00-151-9002	80063	SM-B-414636	NUT STRIP	EA	1
90	13	PADZZ	5305-00-405-8960	96906	MS35223-13	SCREW,MACHINE	EA	6
90	14	PAFZZ	5305-00-558-4889	96906	MS35223-14	SCREW,MACHINE	EA	1
90	15	PAFZZ	5310-00-543-2410	96906	MS35338-40	WASHER,LOCK	EA	1
90	16	PAFZZ	3040-00-884-2460	80063	SM-D-414050	COUPLING HALF,SHAFT	EA	1
90	17	PAHZZ	5365-00-550-5937	79136	5103-25-H	RING,RETAINING	EA	1
90	18	PAHZZ	5305-00-054-5637	96906	MS51957-3	SCREW,MACHINE	EA	2
90	19	XDDDD		80063	SM-C-414060	MOUNTING PLATE ASSY	EA	1
90	20	PAHZZ	5310-01-057-8778	30655	22NCFMA2-40	NUT,SELF-LOCKING SP	EA	4
90	21	XDDZZ		30655	22NCFMA2-26	NUT,SLFLKG	EA	2
90	22	XDDZZ		80063	SM-C-414062	PLATE	EA	1
90	23	PAHZZ		80063	SM-C-414047	COVER	EA	1
90	24	PAHZZ	5305-00-889-2997	96906	MS35206-215	SCREW,MACHINE	EA	2
90	25	XBHZZ		80063	SM-C-414049	SHAFT,STRAIGHT	EA	1
90	26	PAHZZ	5305-00-823-5832	80063	SM-B-414051	SETSCREW	EA	2
90	27	PAHZZ	5310-00-543-2410	96906	MS35338-40	WASHER,LOCK	EA	2
90	28	PAFZZ	5310-00-951-4679	96906	MS27183-3	WASHER,FLAT	EA	3
90	29	PAFZZ	5305-00-082-6789	80063	SM-B-374992	SCREW,MACHINE	EA	3
90	30	PAFZZ	5310-00-543-2410	96906	MS35338-40	WASHER,LOCK	EA	3
90	31	PAFZZ	5960-00-264-3004	81349	TS103U02	SHIELD,ELECTRON TUB	EA	1
90	32	PAFZZ	5960-00-237-0077	81349	JAN5686	ELECTRON TUBE	EA	1
90	33	PAHDL	5820-00-884-2463	80063	SM-D-414063	AMPLIFIER SUBASSEMB	EA	1
90	34	PAFZZ	5960-00-860-7710	98978	T6-226020JM	INSERT,ELECTRON TUB	EA	1
90	35	PAFZZ	5960-00-892-3197	98978	T6-126000JM	INSERT,ELECTRON TUB	EA	1
90	36	XDDDD		80063	SM-C-414056	CHASSIS ASSY	EA	1
90	37	XDDZZ		80063	SM-B-414058	BUSHING	EA	2
90	38	XDDZZ		80063	SM-D-414059	CHASSIS	EA	1

(1) ILLUSTRATION (a) FIG NO	(b) ITEM NO	(2) SMR CODE	(3) NATIONAL STOCK NUMBER	(4) FSCM	(5) PART NUMBER	(6) DESCRIPTION USABLE ON CODE	(7) U/M	(8) QTY INC IN UNIT
90	39	PAHZZ	5940-01-124-3091	80063	SM-B-318011-2	TERMINAL,STUD	EA	1
90	40	PAHZZ		12615	40-144-19 YEL	TERMINAL,STUD	EA	1
90	41	PAHZZ	5940-01-126-0130	80063	SM-B-318011-3	TERMINAL,STUD	EA	1

340/(341 BLANK)

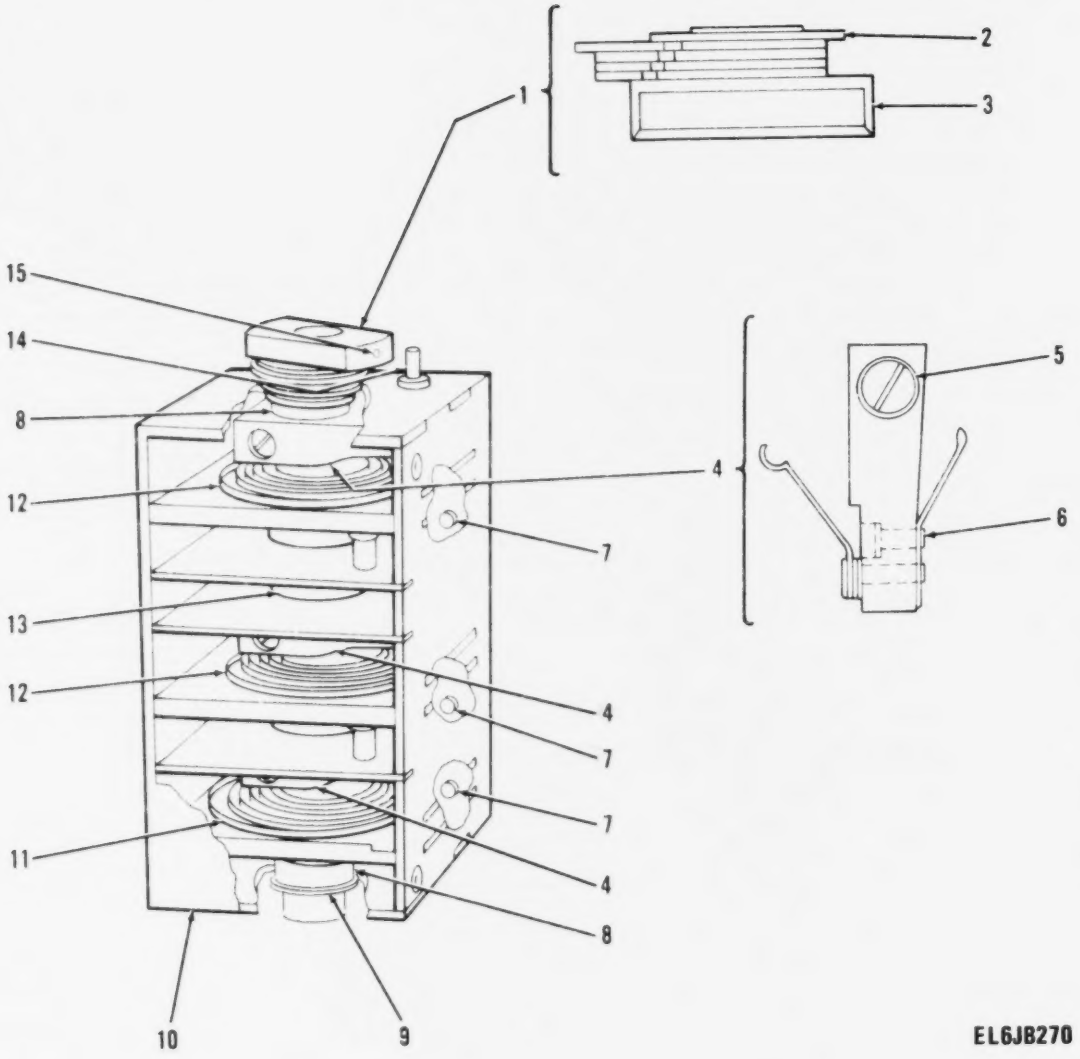

Figure 91. Tuner, Radio Frequency, Driver Tuning Assembly.

(1) ILLUSTRATION (a) FIG NO	(1) ILLUSTRATION (b) ITEM NO	(2) SMR CODE	(3) NATIONAL STOCK NUMBER	(4) FSCM	(5) PART NUMBER	(6) DESCRIPTION / USABLE ON CODE	(7) U M	(8) QTY INC IN UNIT
						GROUP 01080501 TUNER,RADIO FREQUENCY		
						(DRIVER TUNING ASSY)		
						A6102 SM-D-414048		
91	1	PAHZZ	5820-00-832-5591	80063	SM-C-374884	COUPLING AND STOP A	EA	1
91	2	PAHZZ	5365-00-286-8718	96906	MS16633-4037	RING,RETAINING	EA	1
91	3	PAHZZ	3040-00-420-5166	80063	SM-C-374913	COUPLING HALF,SHAFT	EA	1
91	4	PADZZ	5820-00-832-5594	80063	SM-C-374886	CONTACT AND ROTOR A	EA	3
91	5	PADZZ	5305-00-139-7016	80063	SM-B-374959	SCREW,MACHINE	EA	1
91	6	PADZZ	5320-00-952-7864	96906	MS16535-13	RIVET,TUBULAR	EA	1
91	7	PADZZ	5940-00-615-2474	98291	FT-SM-60	TERMINAL,FEEDTHRU,I	EA	3
91	8	XDDZZ		40920	S614FCHHEL0-1	BEARING,BALL	EA	2
91	9	PADZZ	5365-00-550-5937	96906	MS16632-4025	RING,RETAINING	EA	1
91	10	XDDZA		80063	SM-C-374933	COVER	EA	1
91	11	PADZZ	5950-00-899-3413	80063	SM-D-374911	COIL,RADIO FREQUENC	EA	1
91	12	PADZA	5950-00-937-9834	80063	SM-D-374910	COIL,RADIO FREQUENC	EA	2
91	13	PADZZ	3040-01-124-9365	80063	SM-D-374916-2	SHAFT,STRAIGHT	EA	1
91	14	PAHZZ	5315-00-158-4406	80063	SM-B-374858	PIN,SHOULDER,HEADLE	EA	1
91	15	PAHZZ	5315-00-844-5644	96906	MS16562-194	PIN,SPRING	EA	1

LEGEND

REF DES	ITEM NO	REF DES	ITEM NO	REF DES	ITEM NO	REF DES	ITEM NO
C6101	1	C6110	5	C6118	9	L6107	16
C6102	2	C6111	5	J6101	10	L6108	17
C6103	3	C6112	5	L6101	11	R6101	18
C6105	3	C6113	6	L6102	12	R6102	19
C6106	4	C6114	3	L6103	13	R6103	20
C6107	5	C6115	3	L6104	14	R6104	21
C6108	5	C6116	7	L6105	11	R6105	22
C6109	5	C6117	8	L6106	15	XV6101	23

PREFIX ALL REFERENCE DESIGNATIONS WITH A6200A6100

EL6JB271

Figure 92. Driver Amplifier Assembly (Sheet 1 of 3).

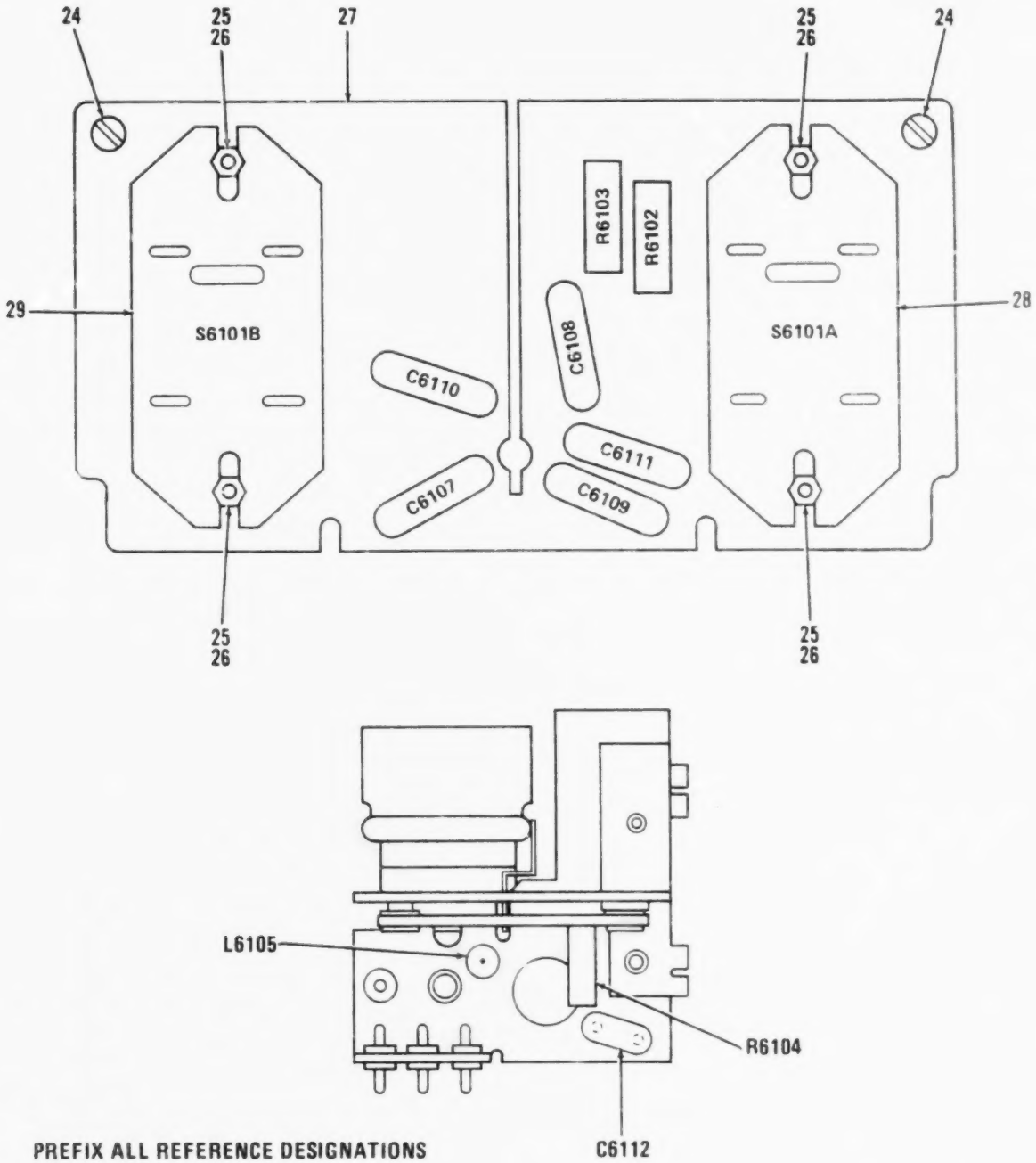

Figure 92. Driver Amplifier Assembly (Sheet 2 of 3).

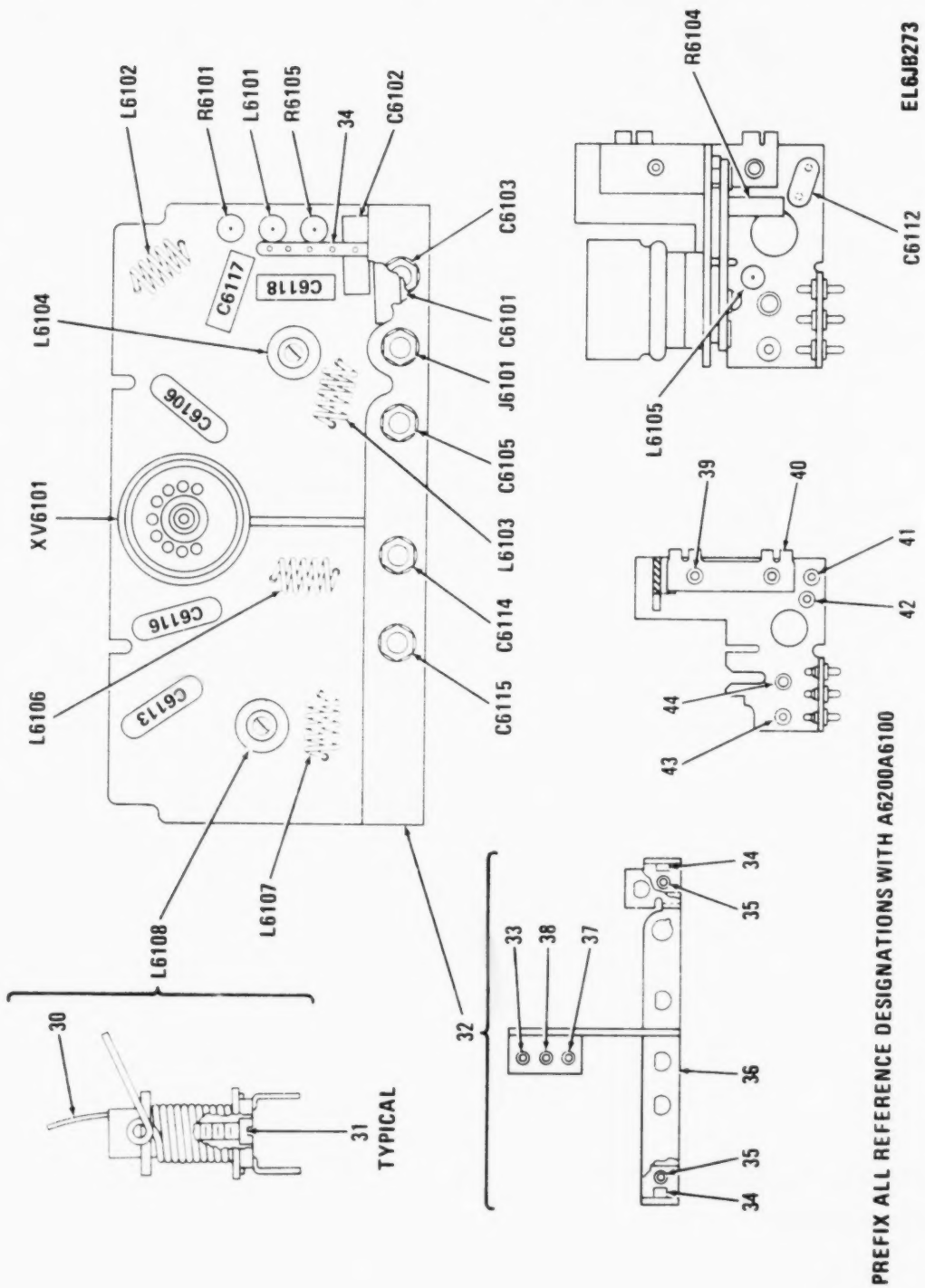

Figure 92. Driver Amplifier Assembly (Sheet 3 of 3).

(1) ILLUSTRATION (a) FIG NO	(1) ILLUSTRATION (b) ITEM NO	(2) SMR CODE	(3) NATIONAL STOCK NUMBER	(4) FSCM	(5) PART NUMBER	(6) DESCRIPTION / USABLE ON CODE	(7) U/M	(8) QTY INC IN UNIT
						GROUP 01080502 DRIVER AMPL ASSY		
						A601 SM-D-414063		
92	1	PAHZZ	5910-00-726-2448	81349	CC22CH5R0C	CAPACITOR,FIXED,CER	EA	1
92	2	PAHZZ	5910-00-583-4891	81349	CC22CH220G	CAPACITOR,FIXED,CER	EA	1
92	3	PAHZZ	5910-00-781-3239	81349	PC50J110	CAPACITOR,VARIABLE	EA	4
92	4	PAHZZ	5910-01-029-3822	81349	CMR06F511GDDR	CAPACITOR,FIXED,MIC	EA	1
92	5	PAHZZ	5910-00-251-1446	72982	801-000X5F0-102K	CAPACITOR,FIXED,CER .001 UF,PORM 20 PCT,500 VDCW	EA	6
92	6	PAHZZ	5910-01-038-5395	81349	CMR05F391GDDR	CAPACITOR,FIXED,MIC	EA	1
92	7	PAHZZ	5910-00-840-1937	81349	CC22TH270G	CAPACITOR,FIXED,CER	EA	1
92	8	PAHZZ	5910-00-726-8696	81349	CC22CH120G	CAPACITOR,FIXED,CER	EA	1
92	9	PAHZZ	5910-01-055-3572	81349	CMR05E620FDDR	CAPACITOR,FIXED,MIC	EA	1
92	10	PAHZA		02660	27-3	CONNECTOR,RECEPTACL 50 OHMS NOMINAL IMPEDANCE	EA	1
92	11	PAHZZ	5950-00-937-9833	80063	SM-C-414091	COIL,RADIO FREQUENC 6.9 UH PORM 0.1 UH AT 7.9 MHZ PORM 7.9KHZ	EA	2
92	12	PADZZ	5950-00-901-4636	80063	SM-B-414068	COIL,RADIO,FREQUEN 7 TURNS	EA	1
92	13	PADZZ	5950-00-901-4633	80063	SM-B-414069	COIL,RADIO,FREQUEN 7 TURNS	EA	1
92	14	PAHZZ	5950-00-901-4643	80063	SM-C-414093	COIL,RADIO FREQUENC 0.715 UH PORM 0.005 UH AT 25 MHZ PORM 100 KHZ	EA	1
92	15	PADZZ	5950-00-901-4629	80063	SM-B-414070	COIL,RADIO FREQUENC 6 TURNS	EA	1
92	16	PADZZ	5950-00-899-3396	80063	SM-B-414071	COIL,RADIO FREQUENC 5 TURNS	EA	1
92	17	PAHZZ	5950-00-899-3410	80063	SM-C-414096	COIL,RADIO FREQUENC 0.582 UH PORM 0.005 UH AT 25 MHZ PORM 100 KHZ	EA	1
92	18	PAHZZ	5905-00-141-1132	81349	RCR07G752JS	RESISTOR,FIXED,COMP	EA	1
92	19	PAHZZ	5905-00-114-0711	81349	RCR07G472JS	RESISTOR,FIXED,COMP	EA	1
92	20	PAHZZ	5905-00-106-1247	81349	RCR32G221JS	RESISTOR,FIXED,COMP	EA	1
92	21	PAHZZ	5905-00-104-8342	81349	RCR20G432JS	RESISTOR,FIXED,COMP	EA	1
92	22	PAHZZ	5905-00-141-1131	81349	RCR07G910JS	RESISTOR,FIXED,COMP	EA	1
92	23	PAHZA	5935-00-901-4694	72825	9799-73	SOCKET,PLUG-IN ELEC 9 FEMALE CONTACTS	EA	1
92	24	PAFZZ	5305-00-054-5637	96906	MS51957-3	SCREW,MACHINE	EA	2
92	25	PAHZZ	5930-00-815-6364	80063	SM-B-414066	GUIDE,SWITCH	EA	4
92	26	PAHZZ	5305-00-614-0286	96906	MS35265-4	SCREW,MACHINE	EA	4
92	27	PADZZ	5820-00-400-5263	80063	SM-D-414077	PRINTED WIRING BOAR	EA	1
92	28	PAHZA	5930-00-484-0959	80063	SM-B-414073	SWITCH ASSEMBLY	EA	1
92	29	PAHZA	5999-00-892-8728	80063	SM-C-414088	CONTACT ASSEMBLY,EL	EA	1
92	30	PAFZZ		80063	SM-B-481760	PLASTIC STRIP	EA	1
92	31	PAFZZ	5950-00-170-4153	95566	F80460-1810-0	CORE,ADJUSTABLE TUN	EA	1
92	32	PAHDA	5820-00-229-6619	80063	SM-D-414080	PLATE ASSEMBLY	EA	1
92	33	XDDZA	5940-00-403-2836	98291	FTSM-14-P20-8RN	TERMINAL,FEEDTHRU,I	EA	1
92	34	XDDZZ		30655	22NCFNA2-26	NUT,SLFLKG	EA	2
92	35	XDDZZ		30655	22NCFNA1-40	NUT,SLFLKG	EA	2
92	36	XDDZA		80063	SM-C-414084	PLATE ASSY	EA	1

(1) ILLUSTRATION (a) FIG. NO.	(1) ILLUSTRATION (b) ITEM NO.	(2) SMR CODE	(3) NATIONAL STOCK NUMBER	(4) FSCM	(5) PART NUMBER	(6) DESCRIPTION USABLE ON CODE	(7) U/M	(8) QTY INC IN UNIT
92	37	XDDZA	5940-00-391-8789	81349	FT032801	TERMINAL,FEEDTHRU,I	EA	1
92	38	XDDZA	5940-00-147-2699	81349	FT030801	TERMINAL,FEEDTHRU,I	EA	1
92	39	XDDZZ		08544	SE34SL PL	EYELET,MTLC	EA	2
92	40	XDDZA		80063	SM-8-414082	TERMINAL STRIP	EA	1
92	41	PAHZZ	5940-00-913-9383	81349	SE13XC04	TERMINAL,STUD	EA	1
92	42	PAHZZ	5940-00-051-6257	81349	SE079801	TERMINAL,STUD	EA	1
92	43	PAHZZ	5940-00-082-4746	98291	FT-SM-32 TUR	TERMINAL,FEEDTHRU,I	EA	1
92	44	PAHZA	5940-00-914-3116	81349	M55155-29-7	TERMINAL,STUD	EA	1

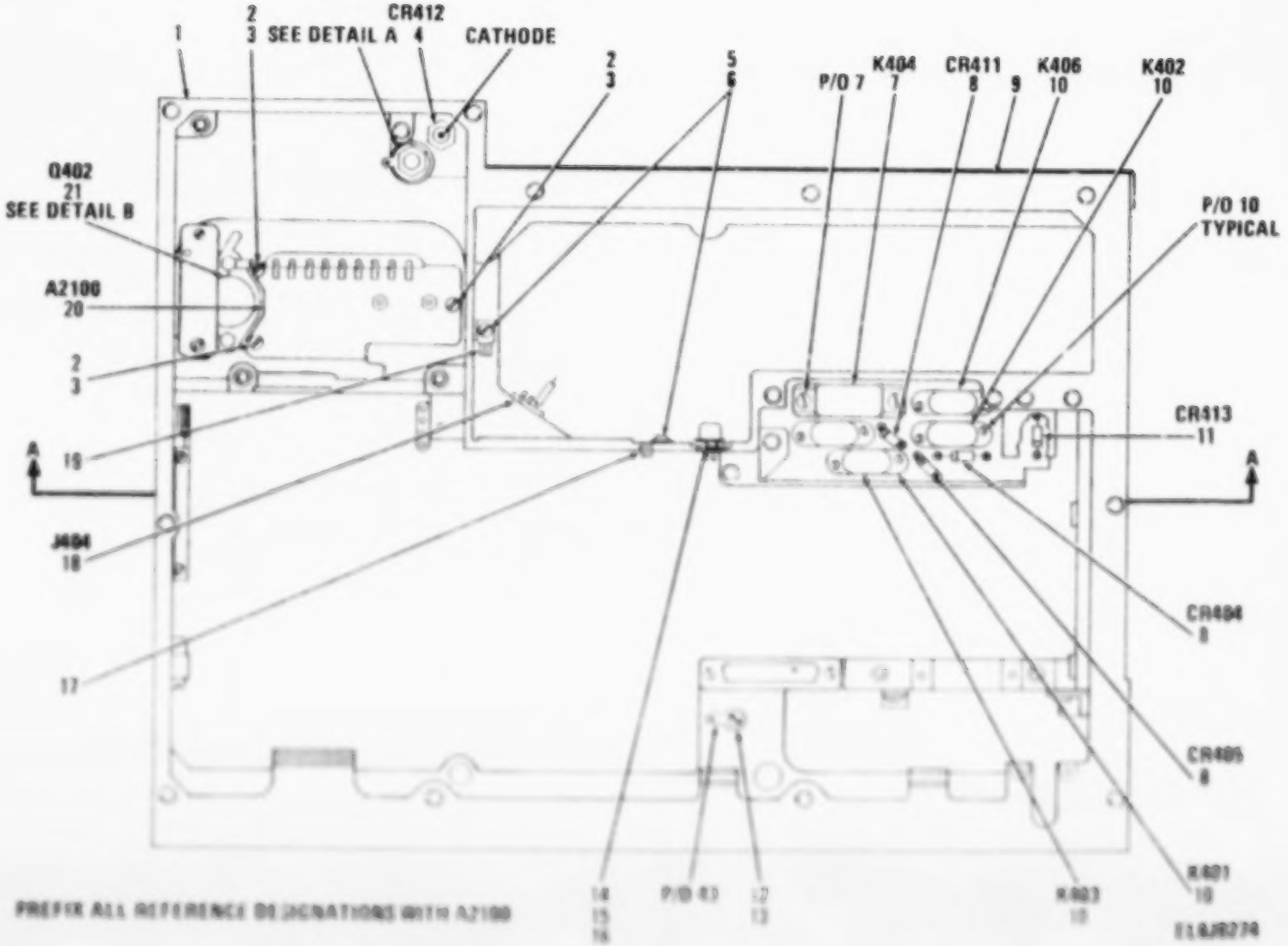

Figure 91. Voltage Regulator Assembly, Voltage Regulator and Mounting (Sheet 1 of 4).

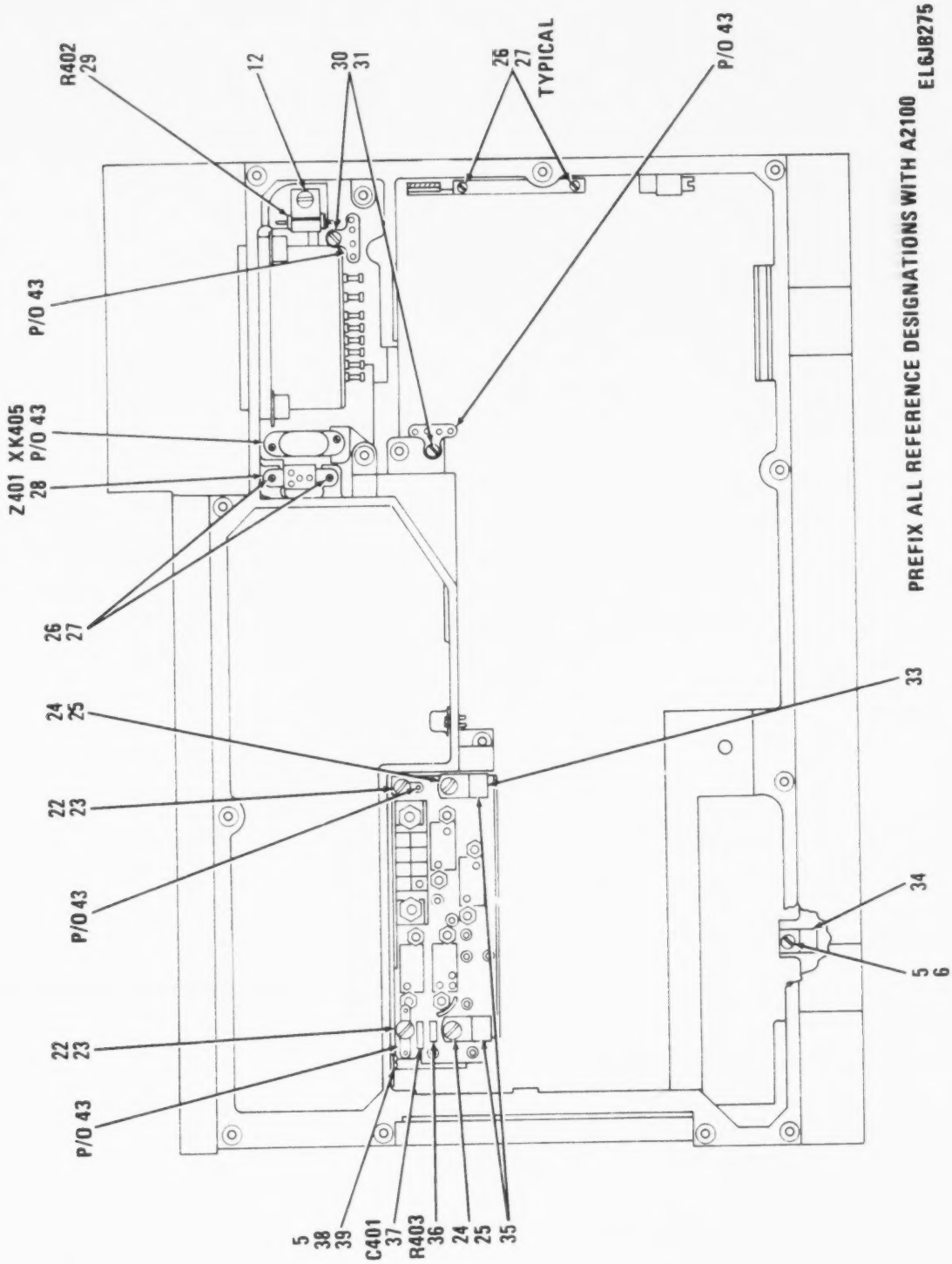

Figure 93. Voltage Regulator Assembly, Voltage Regulator and Housing (Sheet 2 of 4).

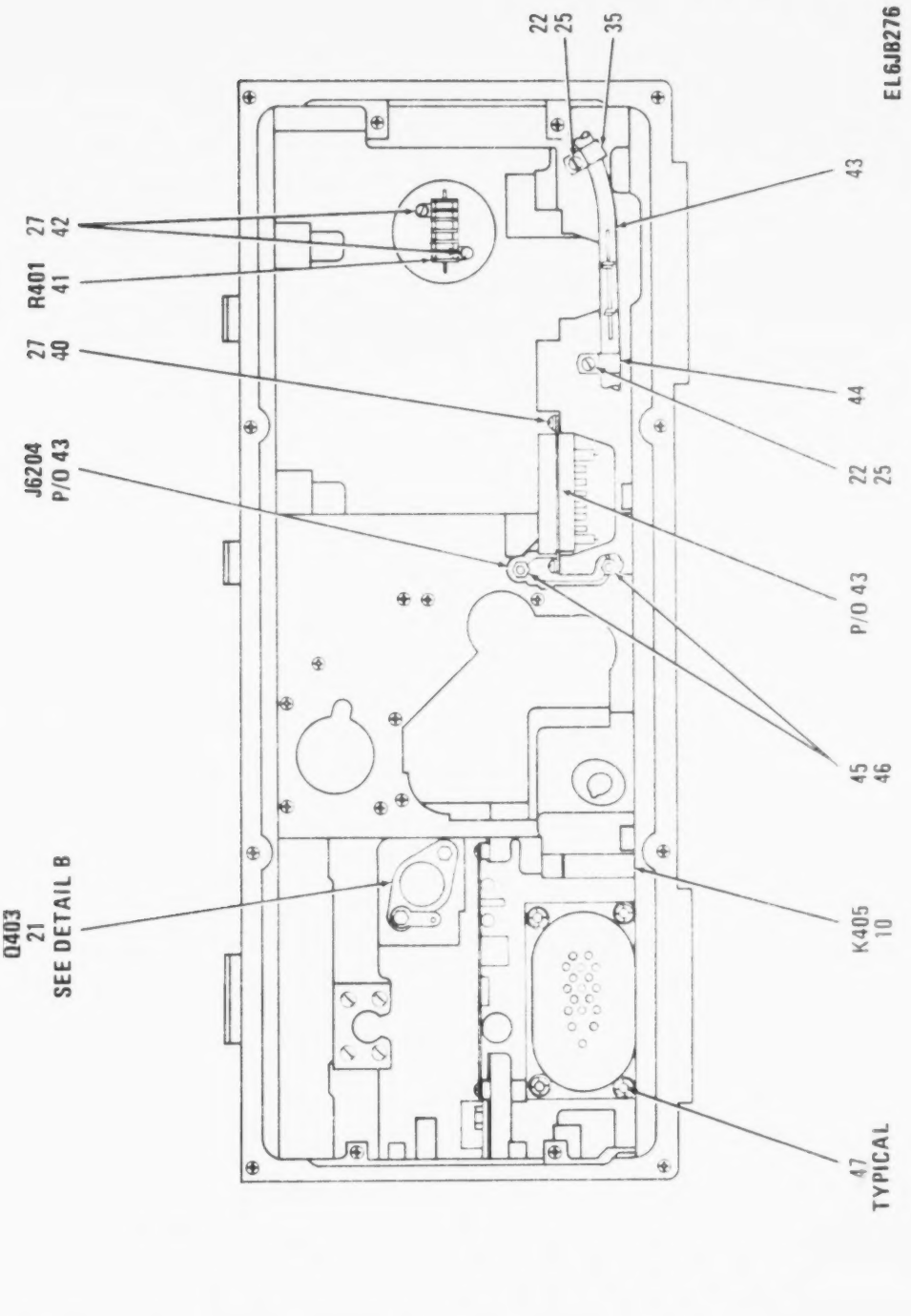

Figure 93. Voltage Regulator Assembly, Voltage Regulator and Housing (Sheet 3 of 4).

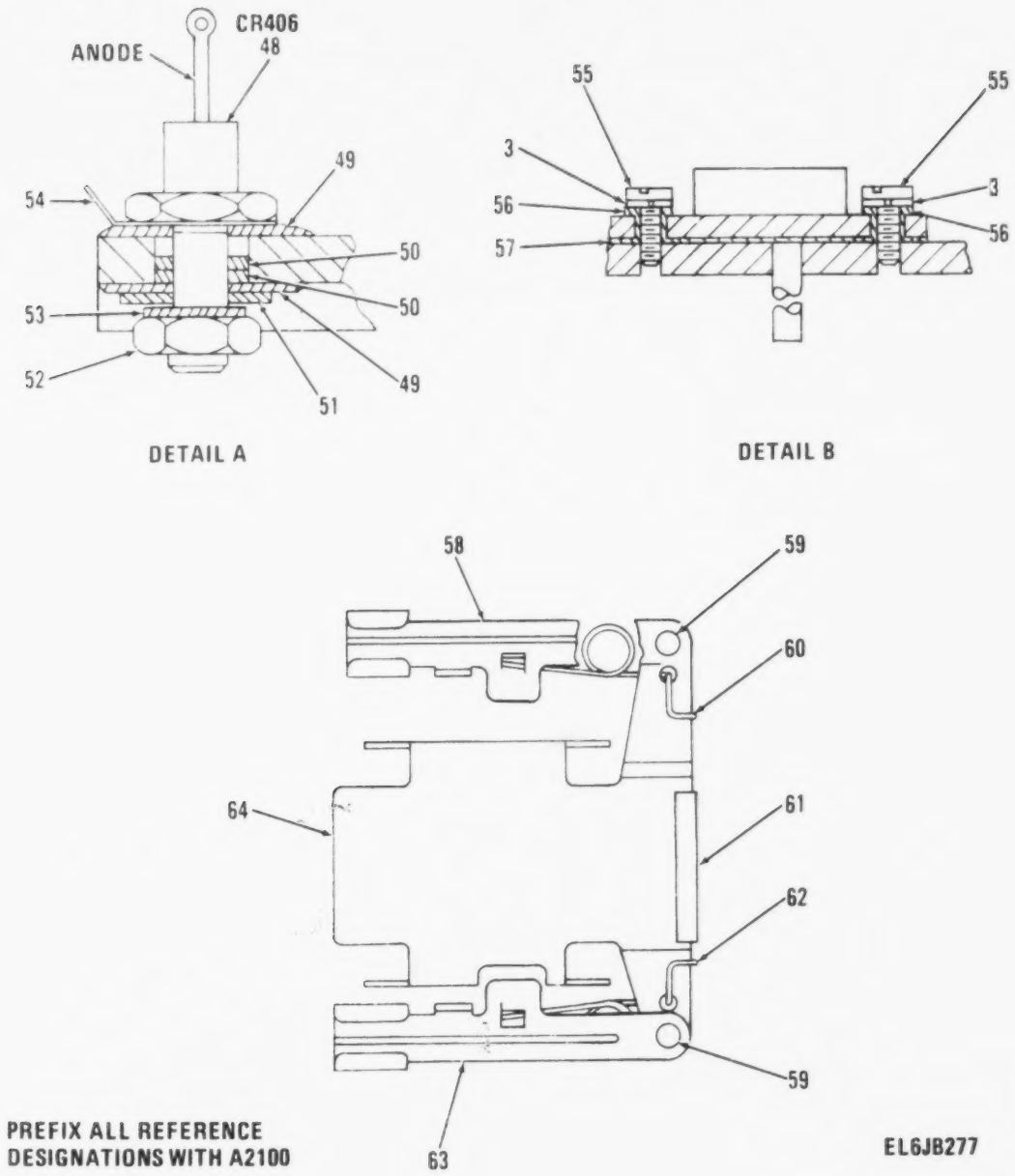

Figure 93. Voltage Regulator Assembly, Voltage Regulator and Housing (Sheet 4 of 4).

(1) ILLUSTRATION (a) FIG NO	(1) ILLUSTRATION (b) ITEM NO	(2) SMR CODE	(3) NATIONAL STOCK NUMBER	(4) ● FSCM	(5) PART NUMBER	(6) DESCRIPTION / USABLE ON CODE	(7) U/M	(8) QTY INC IN UNIT
						GROUP 0109 VOLTAGE REGULATOR ASSY (VOLTAGE REGULATOR AND HOUSING) A400 SM-D-414112		
93	1	PADDD	5820-00-229-6621	80063	SM-D-414163	HOUSING ASSEMBLY	EA	1
93	2	PAFZZ		03038	LP35223-13	SCREW,SELF-LOCKING	EA	3
93	3	PAFZZ	5310-00-951-4679	96906	MS27183-3	WASHER,FLAT	EA	3
93	4	PAFZZ	5961-00-879-4617	81349	JAN1N2992B	SEMICONDUCTOR DEVIC	EA	1
93	5	PAFZZ	5305-00-993-0191	96906	MS35206-212	SCREW,MACHINE	EA	1
93	6	PAFZZ	5310-00-543-2410	96906	MS35338-40	WASHER,LOCK	EA	1
93	7	PAFZZ	5945-00-823-2610	80063	SM-C-414125	RELAY,ELECTROMAGNET DPDT,FORM C,COIL VOLTAGE 22 TO 30 VDC, 300 PORM 10 PCT COILRES	EA	1
93	8	PAFZZ	5961-00-087-6047	81349	JAN1N645	SEMICONDUCTOR DEVIC	EA	3
93	9	PAFZZ	5330-00-899-3325	80063	SM-C-414114-8	PACKING,PREFORMED	EA	1
93	10	PAFZZ	5945-00-823-2609	82050	BR8-600A17-F1-26 V	RELAY,ELECTROMAGNET DPDT,2 FORM C,COIL RATED VOLTAGE 26.5 VDC	EA	5
93	11	PAFZZ	5961-00-842-9864	81349	JAN1N914	SEMICONDUCTOR DEVIC	EA	1
93	12	PAHZZ	5305-00-984-4983	96906	MS24584-23	SCREW,MACHINE	EA	1
93	13	PAHZZ	5310-00-939-0903	96906	MS35335-86	WASHER,LOCK	EA	1
93	14	XBHZZ		80063	SM-B-414820-1	SHIM	EA	V
93	15	PAHZZ	5365-00-988-0916	80063	SM-B-414820-2	SHIM	EA	V
93	16	XBHZZ		80063	SM-B-414820-3	SHIM	EA	V
93	17	PAFZZ	5340-00-089-8725	80063	SM-B-414127	CLAMP,RIM CLENCHING	EA	1
93	18	PAHZZ	5935-00-498-4733	81312	M4SLRN	CONNECTOR,RECEPTACL & SOCKET TYPE CONTACTS	EA	1
93	19	PAFZZ	5340-01-132-0727	80063	SM-B-414115	CLIP,SPRING TENSION	EA	1
93	20	PAFDL	5820-00-858-6498	80063	SM-D-414157	RECEIVER SUBASSEMBL	EA	1
93	21	PAFZZ	5961-00-752-6136	81349	JAN2N297A	TRANSISTOR	EA	2
93	22	PAHZZ	5305-00-984-4984	96906	MS35206-227	SCREW,MACHINE	EA	2
93	23	PAHZZ	5310-00-209-0788	96906	MS35335-30	WASHER,LOCK	EA	2
93	24	PAHZZ	5305-00-984-4988	96906	MS35206-228	SCREW,MACHINE	EA	2
93	25	PAHZZ	5310-00-167-0816	88044	AN960-6	WASHER,FLAT	EA	4
93	26	PAFZZ	5305-00-054-5637	96906	MS51957-3	SCREW,MACHINE	EA	2
93	27	PAFZZ	5310-00-543-5060	96906	MS35338-39	WASHER,LOCK	EA	2
93	28	PAFZZ	5915-00-884-2601	80045	806141	NETWORK,IMPEDANCE M 30 VDCW,150 OHMS ,PORM 10 PCT INPUT IMP, 500 TO 3000 HZ	EA	1
93	29	PAFZZ	5905-00-896-1904	01121	GM2205	RESISTOR,FIXED,COMP 22 OHMS,PORM 5 PCT,3 WATTS	EA	1
93	30	PAHZZ	5305-00-405-8960	96906	MS35223-13	SCREW,MACHINE	EA	2
93	31	PAHZZ	5310-00-939-1063	96906	MS35335-85	WASHER,LOCK	EA	2
93	32	PADZZ	5820-01-124-1468	80063	SM-D-414152	SHIELD ASSEMBLY	EA	1
93	33	PAHHA	5820-00-400-7260	80063	SM-C-414149	CHASSIS ASSEMBLY,EL	EA	1
93	34	PAFZZ	5340-01-127-7906	80063	SM-B-414128	STRAP,RETAINING	EA	1

(1) ILLUSTRATION (a) FIG NO	(1) ILLUSTRATION (b) ITEM NO	(2) SMR CODE	(3) NATIONAL STOCK NUMBER	(4) FSCM	(5) PART NUMBER	(6) DESCRIPTION USABLE ON CODE	(7) U/M	(8) QTY INC IN UNIT
93	35	PAHZZ	5340-00-852-7297	71616	CPC-1953-6B	CLAMP,LOOP	EA	3
93	36	PAFZZ	5905-00-107-0656	81349	RCR07G100JS	RESISTOR,FIXED,COMP	EA	1
93	37	PAFZZ	5910-00-007-2003	81349	M39003/01-3009	CAPACITOR,FIXED,ELE	EA	1
93	38	PAFZZ	5310-00-950-1310	96906	MS27183-4	WASHER,FLAT	EA	1
93	39	PAFZZ		80063	SM-B-374808	RETAINER,CABLE	EA	1
93	40	PAHZZ		96906	MS35223-4	SCREW,MACHINE	EA	2
93	41	PAFZZ		91637	RH-10173H	RESISTOR,FIXED WIRE 17000 OHMS,PORM 3 PCT,10 WATTS	EA	1
93	42	PAFZZ	5305-00-616-8543	96906	MS35265-3	SCREW,MACHINE	EA	2
93	43	ADODA		80063	SM-E-414135	WIRING ASSY,V RGLTR	EA	1
93	44	PAHZZ	5340-00-782-8737	80205	NAS1397P4N	CLAMP,LOOP	EA	1
93	45	PAHZZ	5310-01-100-6991	30655	F92-1660-26	NUT,SELF-LOCKING,HE	EA	2
93	46	PAHZZ	5305-00-958-6382	96906	MS35206-206	SCREW,MACHINE	EA	2
93	47	PAFZZ	5305-00-054-6671	96906	MS51957-46	SCREW,MACHINE	EA	4
93	48	PAFZZ	5961-00-892-3672	03877	1N3565	SEMICONDUCTOR DEVIC	EA	1
93	49	PAFZZ	5310-01-127-1408	03877	HP35W-1C-4	WASHER,FLAT	EA	2
93	50	PAFZZ		03877	HP35W-1C-5	WASHER,FLAT	EA	2
93	51	PAFZZ	5310-00-167-0834	88044	AN960-10L	WASHER,FLAT	EA	1
93	52	PAFZZ	5310-00-934-9751	96906	MS35650-302	NUT,PLAIN,HEXAGON	EA	1
93	53	PAFZZ	5310-00-045-3296	96906	MS35338-43	WASHER,LOCK	EA	1
93	54	PAFZZ	5940-00-681-8184	96906	MS0035431-8	TERMINAL,LUG	EA	1
93	55	PAFZZ	5305-00-889-2999	96906	MS35206-217	SCREW,MACHINE	EA	4
93	56	PAFZZ	5970-00-818-3486	80063	SM-B-431134	INSULATOR,BUSHING	EA	4
93	57	PAFZZ	5970-00-717-2198	13327	2106103	INSULATOR,PLATE	EA	2
93	58	PADZZ	5820-00-858-6499	80063	SM-D-414155-1	SLIDE,PANEL	EA	1
93	59	PADZZ	5320-00-800-5704	96906	MS16535-64	RIVET,TUBULAR	EA	1
93	60	PADZZ	5360-00-823-5297	80063	SM-C-414156-1	SPRING,HELICAL,TORS	EA	1
93	61	XDDZZ		80063	SM-B-414230	BUMPER	EA	1
93	62	PADZZ	5360-00-823-5296	80045	805091-2	SPRING,HELICAL,TORS	EA	1
93	63	PADZZ	5820-00-858-6475	80063	SM-D-414155-2	SLIDE,PANEL	EA	1
93	64	XDDZZ		80063	SM-D-414154	BRACKET	EA	1

LEGEND

REF DES	ITEM NO	REF DES	ITEM NO	REF DES	ITEM NO	REF DES	ITEM NO
CR2101	1	C2103	4	RT2101	8	R2105	13
CR2102	1	C2104	5	R2101	9	R2106	14
CR2103	2	Q2101	6	R2102	10	R2107	15
C2101	3	Q2102	7	R2103	11	R2108	16
C2102	3	Q2103	6	R2104	12	R2109	11

EL6JB278

PREFIX ALL REFERENCE DESIGNATIONS WITH A2100

Figure 94. Voltage Regulator Assembly (Sheet 1 of 2).

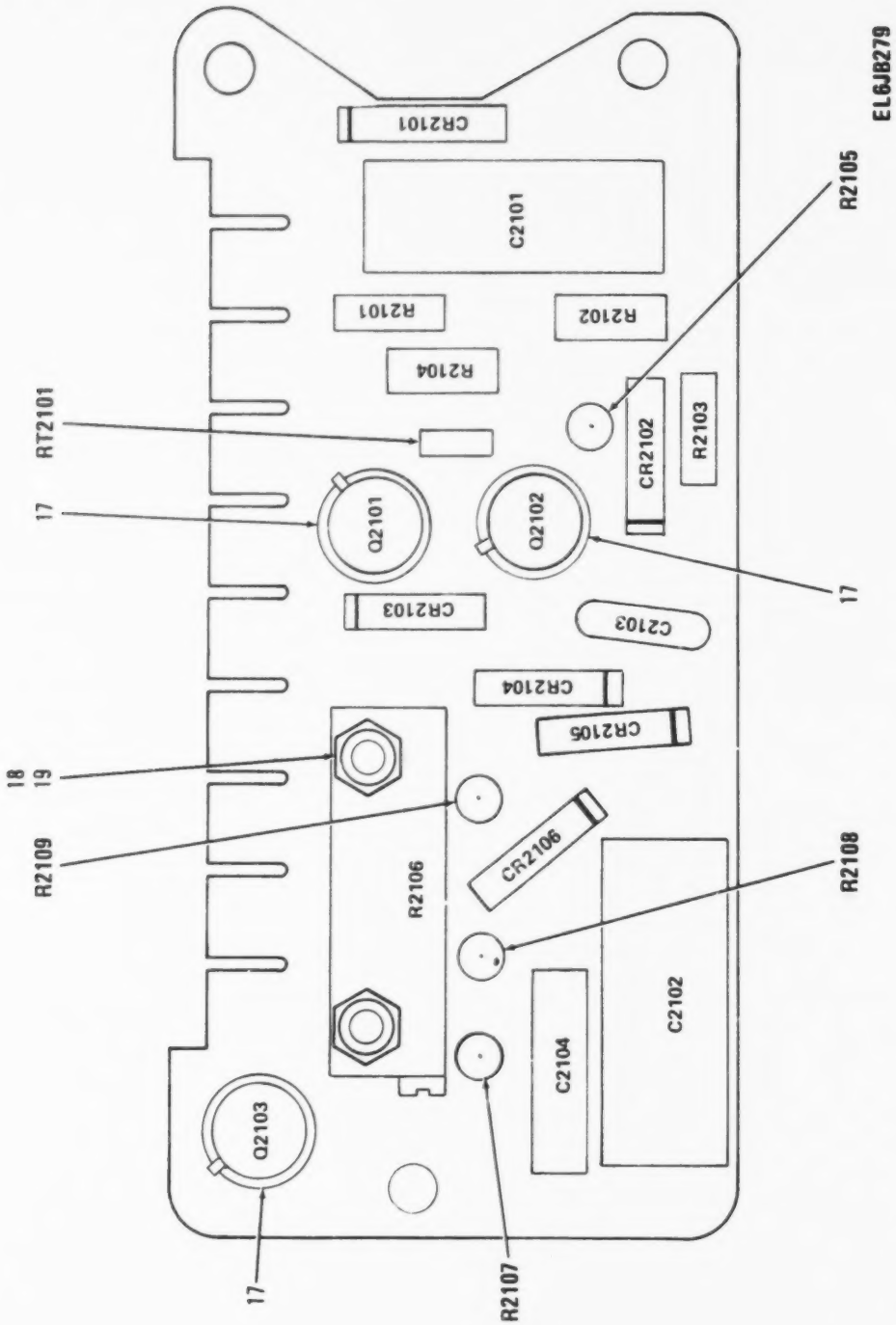

Figure 94. Voltage Regulator Assembly (Sheet 2 of 2).

(1) ILLUSTRATION (a) FIG NO	(1) ILLUSTRATION (b) ITEM NO	(2) SMR CODE	(3) NATIONAL STOCK NUMBER	(4) FSCM	(5) PART NUMBER	(6) DESCRIPTION / USABLE ON CODE	(7) U M	(8) QTY INC IN UNIT
						GROUP 010901 VOLTAGE REGULATOR ASSY		
						A2100 SM-D-414157		
						A2100A SM-D-921166		
94	1	PADZZ	5961-00-087-6047	81349	JAN1N645	SEMICONDUCTOR DEVIC	EA	5
94	2	PADZZ	5961-00-995-2310	81349	JAN1N752A	SEMICONDUCTOR DEVIC	EA	1
94	3	PADZZ	5910-00-114-0221	81349	M39003/01-3018	CAPACITOR,FIXED,ELE	EA	2
94	4	PADZZ	5910-00-857-5305	18796	855-222X550-103M	CAPACITOR,FIXED,CER .01 UF,PORM 20 PCT,100 VDCW	EA	1
94	5	PADZZ	5910-00-007-2003	81349	M39003/01-3009	CAPACITOR,FIXED,ELE	EA	1
94	6	KADZZ		81349	JANZN328A	TRANSISTOR	EA	2
94	7	XADZZ		81349	JAN2N335	TRANSISTOR	EA	1
94	8	XADZZ		50056	25TD24	THERMISTOR .500 OHMS,PORM 10 PCT,RESISTANCE AT 25 DEG C	EA	1
94	9	PADZZ	5905-00-119-3503	81349	RCR07G271JS	RESISTOR,FIXED,COMP	EA	1
94	10	PADZZ	5905-00-110-0196	81349	RCR20G102JS	RESISTOR,FIXED,COMP	EA	1
94	11	PADZZ	5905-00-135-6046	81349	RCR07G681JS	RESISTOR,FIXED,COMP	EA	2
94	12	PADZZ	5905-00-107-0656	81349	RCR07G100JS	RESISTOR,FIXED,COMP	EA	1
94	13	PADZZ	5905-00-110-7620	81349	RCR07G102JS	RESISTOR,FIXED,COMP	EA	1
94	14	PADZZ	5905-00-682-4264	32997	220W-1-502	RESISTOR,VARIABLE,W 5000 OHMS PLUS 10 PCT,MAX RESISTANCE	EA	1
94	15	PADZZ	5905-00-118-4559	81349	RCR07G333JS	RESISTOR,FIXED,COMP	EA	1
94	16	PADZZ	5905-00-115-3560	81349	RCR07G183JS	RESISTOR,FIXED,COMP	EA	1
94	17	PADZZ	5999-00-752-5321	07047	A-10012	INSULATOR,DISK	EA	3
94	18	PADZZ	5305-00-989-0682	96906	MS35206-205	SCREW,MACHINE	EA	2
94	19	PADZZ	5310-01-100-6991	30655	F92-1660-26	NUT,SELF-LOCKING,HE	EA	2

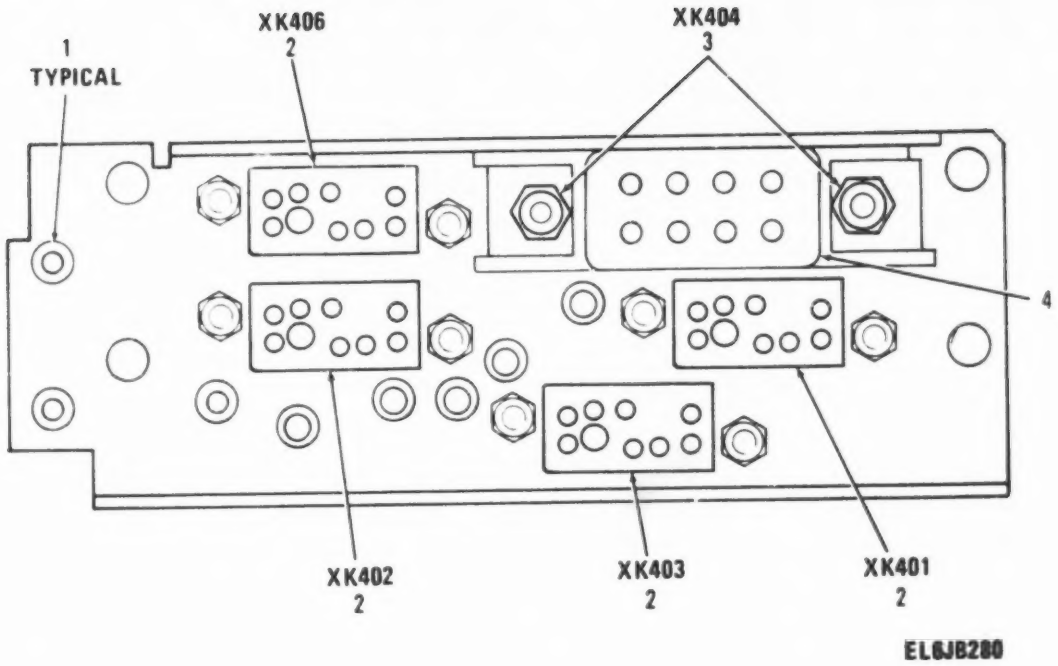

Figure 95. Chassis Assembly, Electrical

(1) ILLUSTRATION (a) FIG NO	(1) ILLUSTRATION (b) ITEM NO	(2) SMR CODE	(3) NATIONAL STOCK NUMBER	(4) FSCM	(5) PART NUMBER	(6) DESCRIPTION / USABLE ON CODE	(7) U/M	(8) QTY INC IN UNIT
						GROUP 010902 CHASSIS ASSEMBLY ELECTRI-		
						CAL A1 SM-C-416149		
95	1	PAHZZ	5940-00-057-7415	98291	011-2025-00-0-47 9	TERMINAL,FEEDTHRU,E	EA	8
95	2	PAHZA	5935-00-089-8050	05574	000300-0319	SOCKET,PLUG-IN ELEC 8 SOCKET TYPE CONTACTS	EA	4
95	3	PAHZZ	5310-00-081-8087	96906	MS21044N06	NUT,SELF-LOCKING,HE	EA	2
95	4	PAHZA	5935-00-823-0766	05574	V88/1PALL-42	SOCKET,PLUG-IN ELEC 8 SOCKET TYPE CONTACTS	EA	1

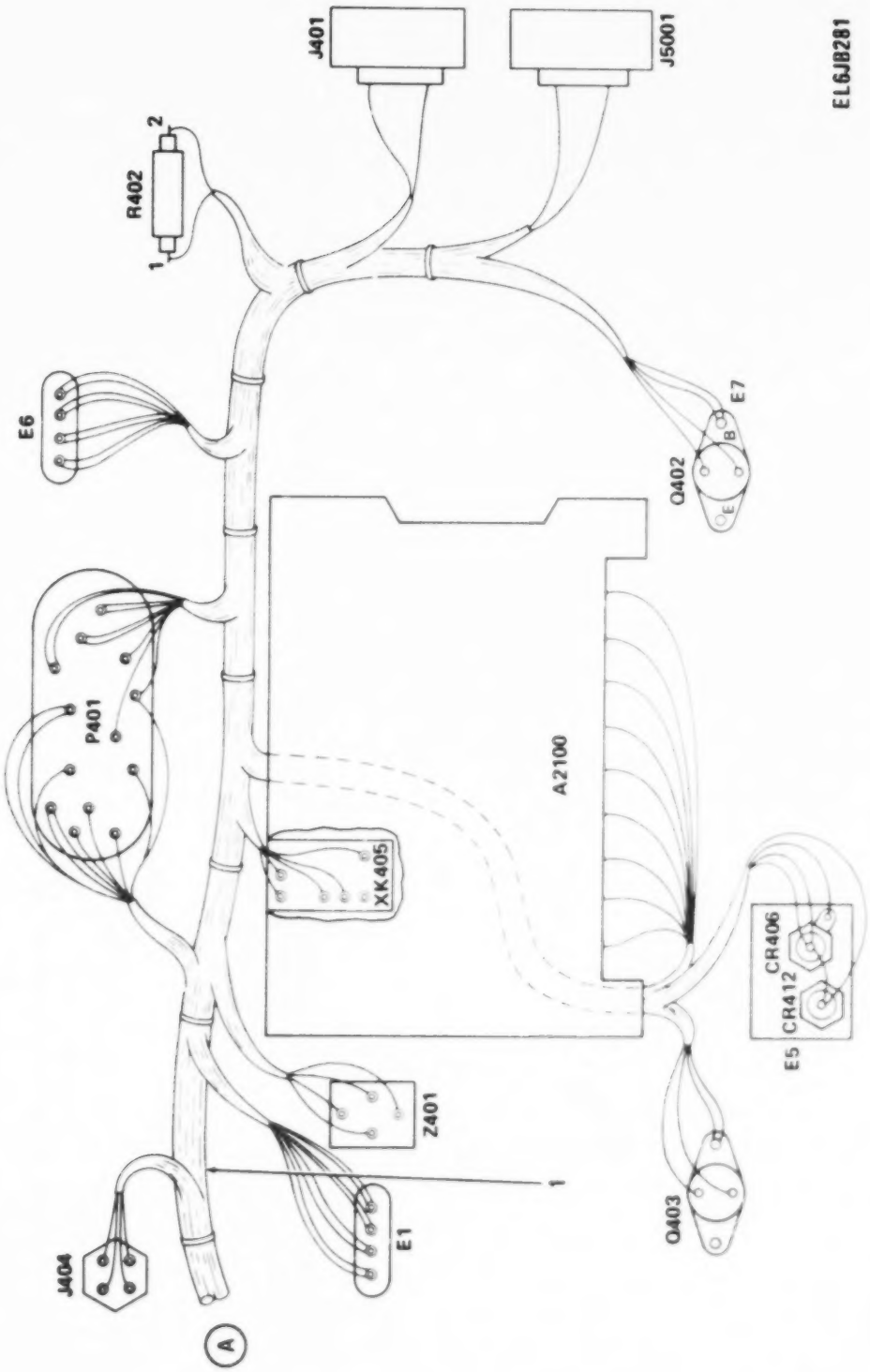

Figure 96. Wiring Assembly, Voltage Regulator, Chassis Wiring Assembly (Sheet 1 of 2).

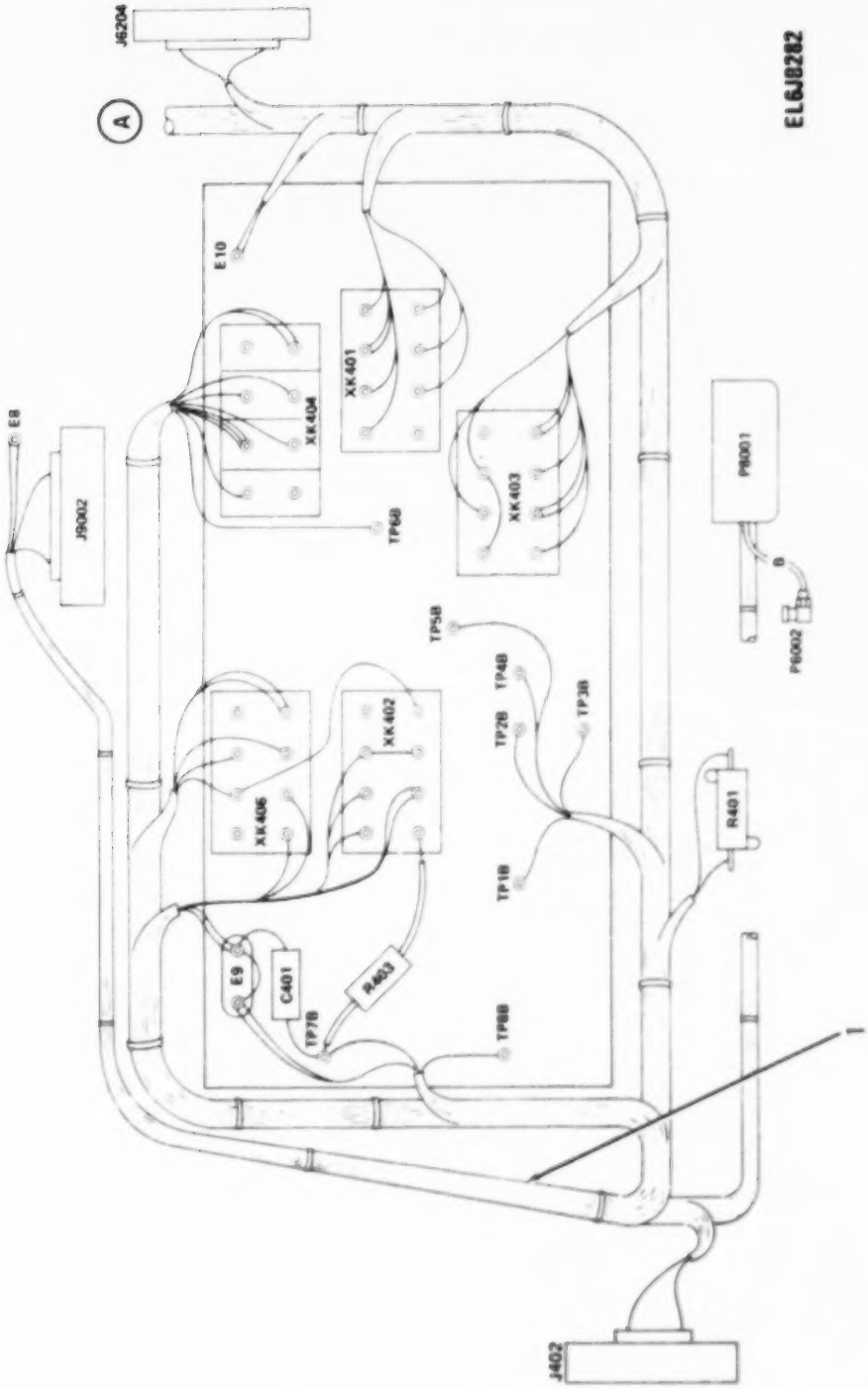

Figure 96. Wiring Assembly, Voltage Regulator, Chassis Wiring Assembly (Sheet 2 of 2).

(1) ILLUSTRATION (a) FIG NO	(b) ITEM NO	(2) SMR CODE	(3) NATIONAL STOCK NUMBER	(4) FSCM	(5) PART NUMBER	(6) DESCRIPTION USABLE ON CODE	(7) U/M	(8) QTY
						GROUP [illegible] WIRING [illegible]		
						[illegible]		
						[illegible]		
96	1	AOOZO		98063	10-E-614137	WIRING HARNESS ASSY..	[illegible]	[illegible]

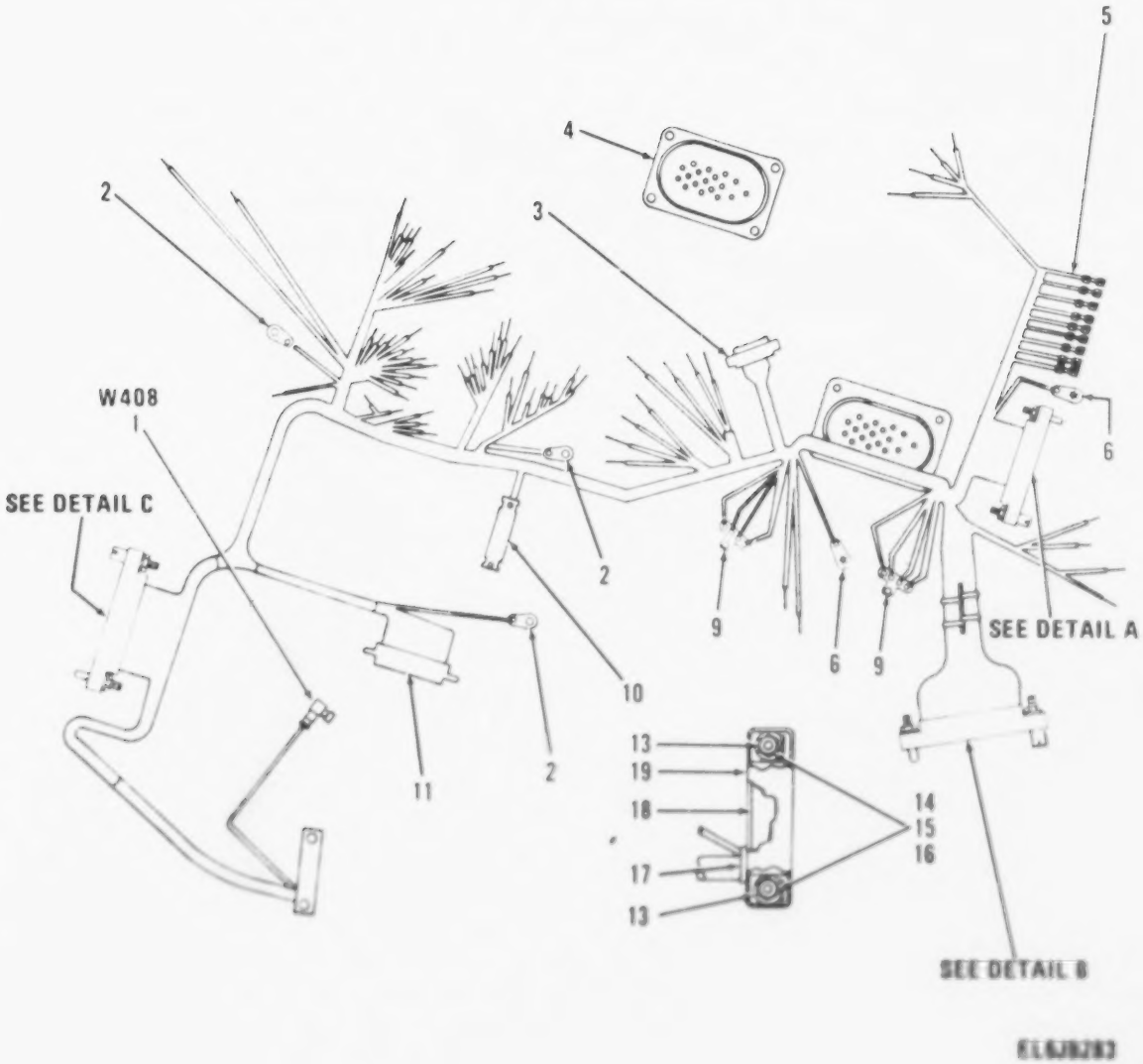

Figure 97. Wiring Harness Assembly (Sheet 1 of 2).

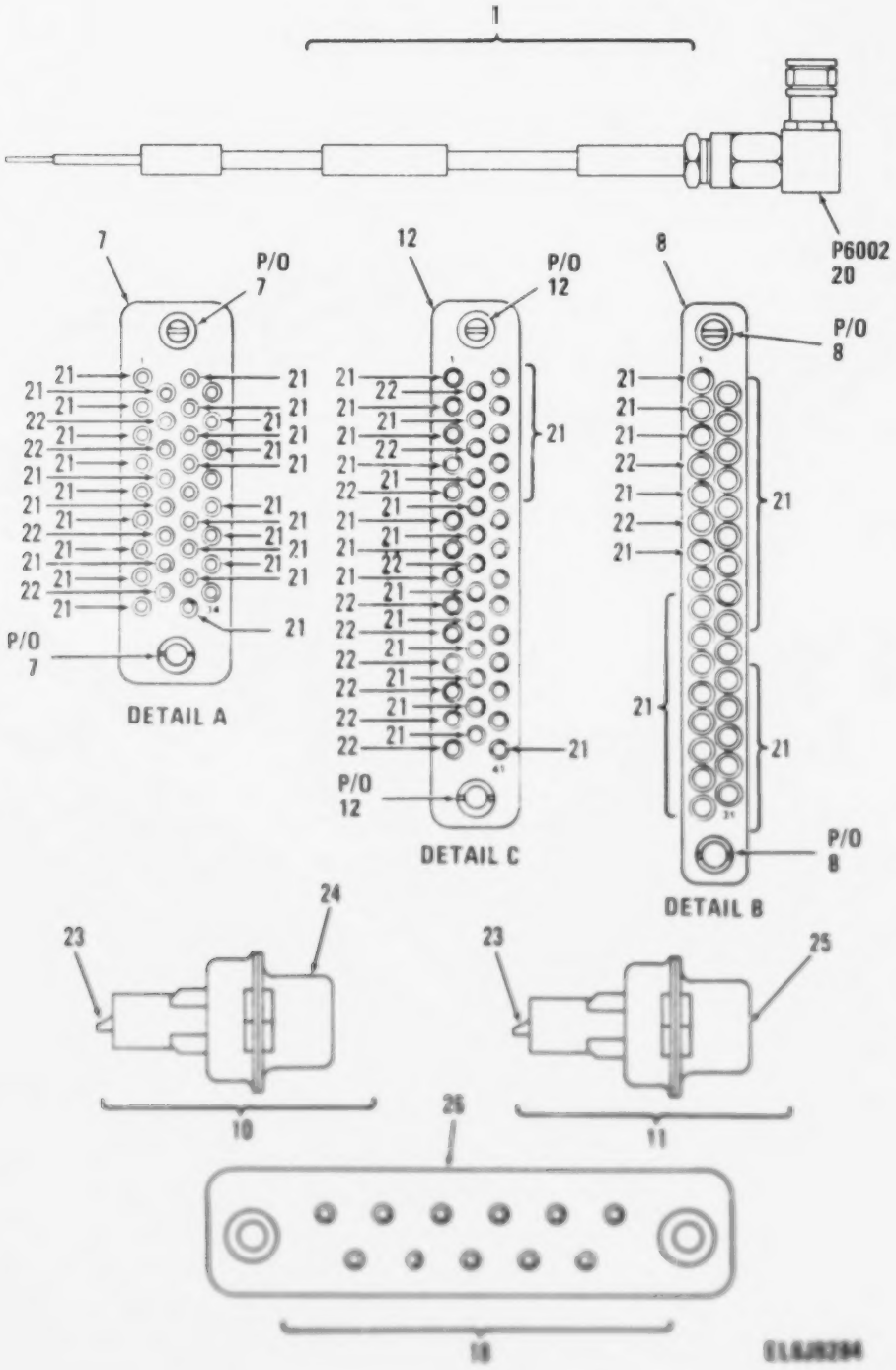

Figure 57. Wiring Harness Assembly (Sheet 2 of 2).

(1) ILLUSTRATION (a) FIG NO	(b) ITEM NO	(2) SMR CODE	(3) NATIONAL STOCK NUMBER	(4) FSCM	(5) PART NUMBER	(6) DESCRIPTION USABLE ON CODE	(7) U/M	(8) QTY INC IN UNIT
						GROUP 01090301 WIRING HARNESS ASSY		
						SM-E-414137		
97	1	PAHHA	5995-00-823-2598	80063	SM-D-413816-GR4	CABLE ASSEMBLY,RADI	EA	1
97	2	PAHZZ	5940-00-156-7345	96906	MS77067-2	TERMINAL,LUG	EA	3
97	3	PAHZA	5935-00-089-8050	05574	000300-0319	SOCKET,PLUG-IN ELEC 8 SOCKET TYPE CONTACTS	EA	1
97	4	PAFZA	5935-00-853-6673	80063	SM-D-414116	CONNECTOR,RECEPTACL 18 PIN TYPE CONTACTS	EA	1
97	5	PAFZZ	5940-00-849-8617	00779	42263-2	TERMINAL,LUG	EA	9
97	6	PAHZZ	5940-00-204-5088	96906	MS77070-3	TERMINAL,LUG	EA	2
97	7	PAFZA	5935-00-853-6675	80063	SM-D-414139	CONNECTOR BODY,RECE 34 CONTACT POSITION	EA	1
97	8	PAHZA	5935-00-853-6674	05574	VCS31/1A25	CONNECTOR BODY,RECE 31 CONTACT POSITIONS	EA	1
97	9	PAHZZ	5940-00-853-9850	80063	SM-B-414126	TERMINAL,LUG	EA	2
97	10	AHHHA		80063	SM-D-414122	CONNECTOR ASSY 10 SOCKET TYPE CONTACTS,1 HIGH VOLTAGE PIN TYPE CONTACT	EA	1
97	11	XDHZA	5935-00-983-7040	80063	SM-C-414118	CONNECTOR,RECEPTACL 15 PIN TYPE CONTACTS,1 HIGH VOLT PIN TYPE CONTACT	EA	1
97	12	PAHZA	5935-00-892-3059	05574	000400-0027	CONNECTOR BODY,RECE 41 CONTACT POSITIONS	EA	1
97	13	PAHZZ	5940-00-614-0537	96906	MS35431-1	TERMINAL,LUG	EA	2
97	14	PAHZZ	5310-00-543-2610	96906	MS35338-40	WASHER,LOCK	EA	2
97	15	PAHZZ	5310-00-934-9739	96906	MS35649-242	NUT,PLAIN,HEXAGON	EA	2
97	16	PAHZZ	5310-00-823-8759	80063	SM-C-414147	NUT,SLEEVE	EA	2
97	17	PAHZZ	5325-00-071-8949	70485	230	GROMMET,NONMETALLIC	EA	1
97	18	PAHZA	5935-00-823-0781	80063	SM-D-414145-2	CONNECTOR,RECEPTACL 11 SOCKET TYPE CONTACTS	EA	1
97	19	XBHZZ		80063	SM-C-414146	COVER	EA	1
97	20	PAHZA	5935-00-762-0414	05009	51-311-3196	CONNECTOR,PLUG,ELEC FEMALE COAXIAL,RIGHT ANGLE	EA	1
97	21	PAHZA	5999-00-853-6742	05574	019-0039-000	CONTACT,ELECTRICAL	EA	77
97	22	PAHZA	5999-00-853-6667	05574	019-0060-000	CONTACT,ELECTRICAL	EA	15
97	23	PAHZA	5999-01-131-6585	71468	053744-0000	CONTACT,ELECTRICAL	EA	1
97	24	PAHZA	5935-00-059-2640	71468	DAMF11W1S	CONNECTOR,RECEPTACL 10 SOCKET TYPE CONTACTS	EA	1
97	25	PAHZA	5935-00-497-0791	71468	DBMF17W2S	CONNECTOR,RECEPTACL 15 PIN TYPE CONTACTS	EA	1
97	26	PAHZA	5935-00-823-0775	95238	683-2G0	CONNECTOR,RECEPTACL 11 SOCKET TYPE CONTACTS	EA	1

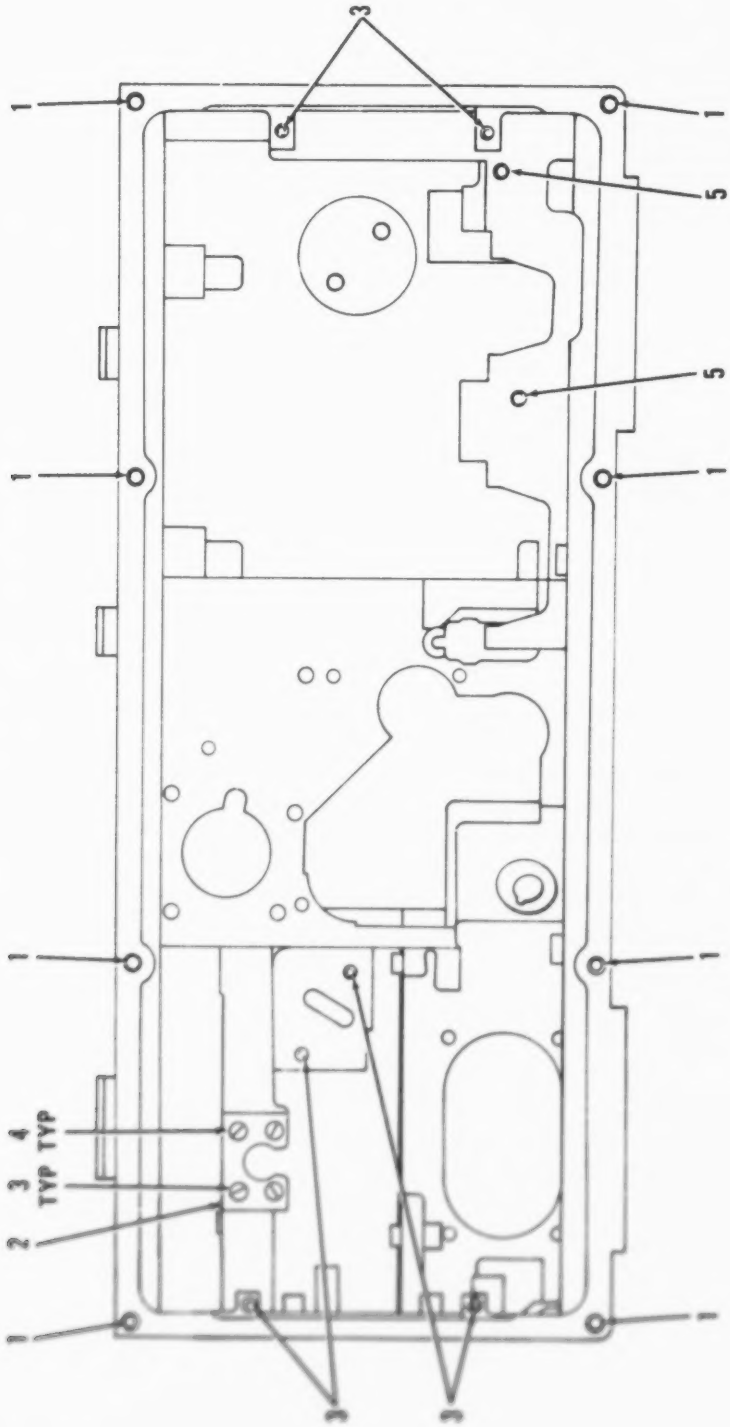

Figure 98. Housing Assembly (Sheet 1 of 5).

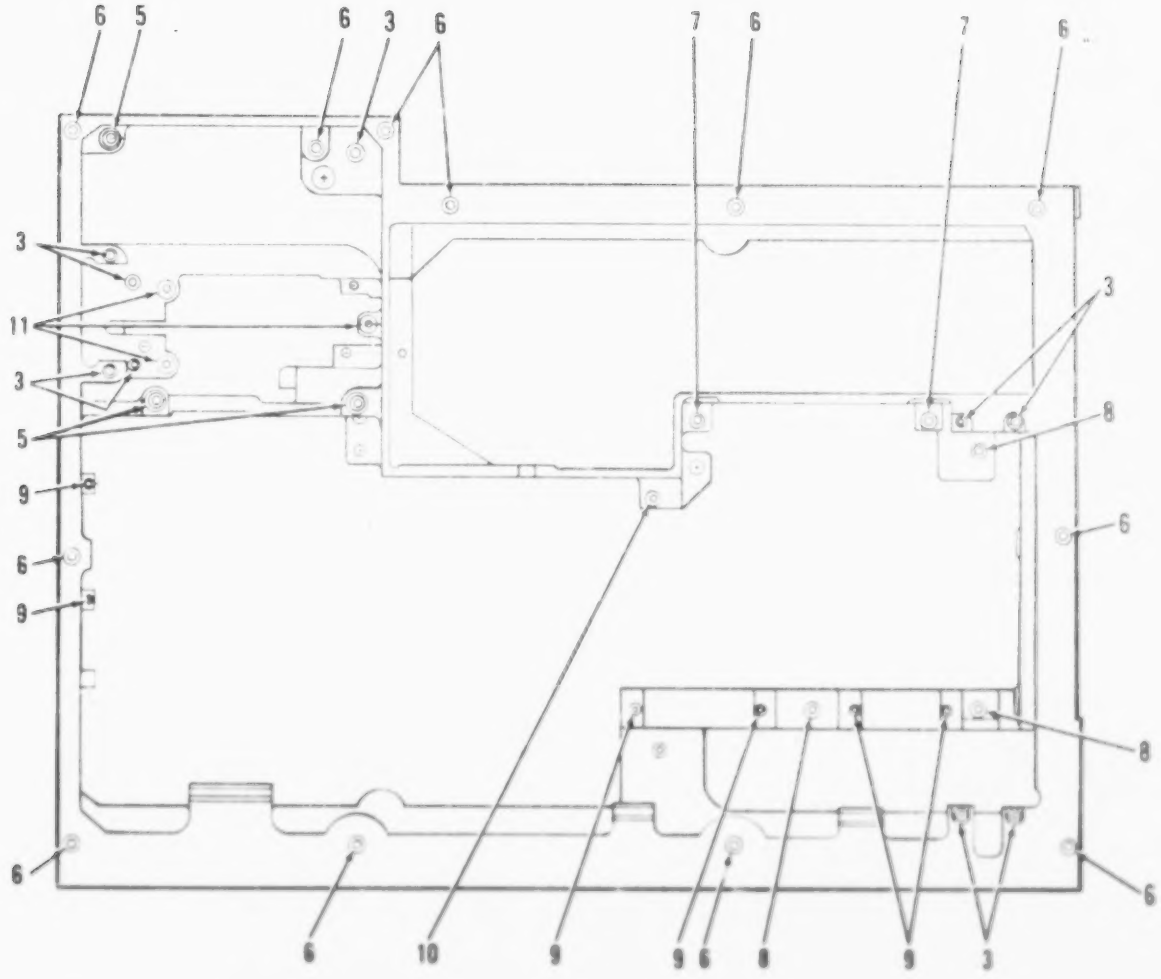

Figure 30. Housing Assembly (Sheet 2 of 5).

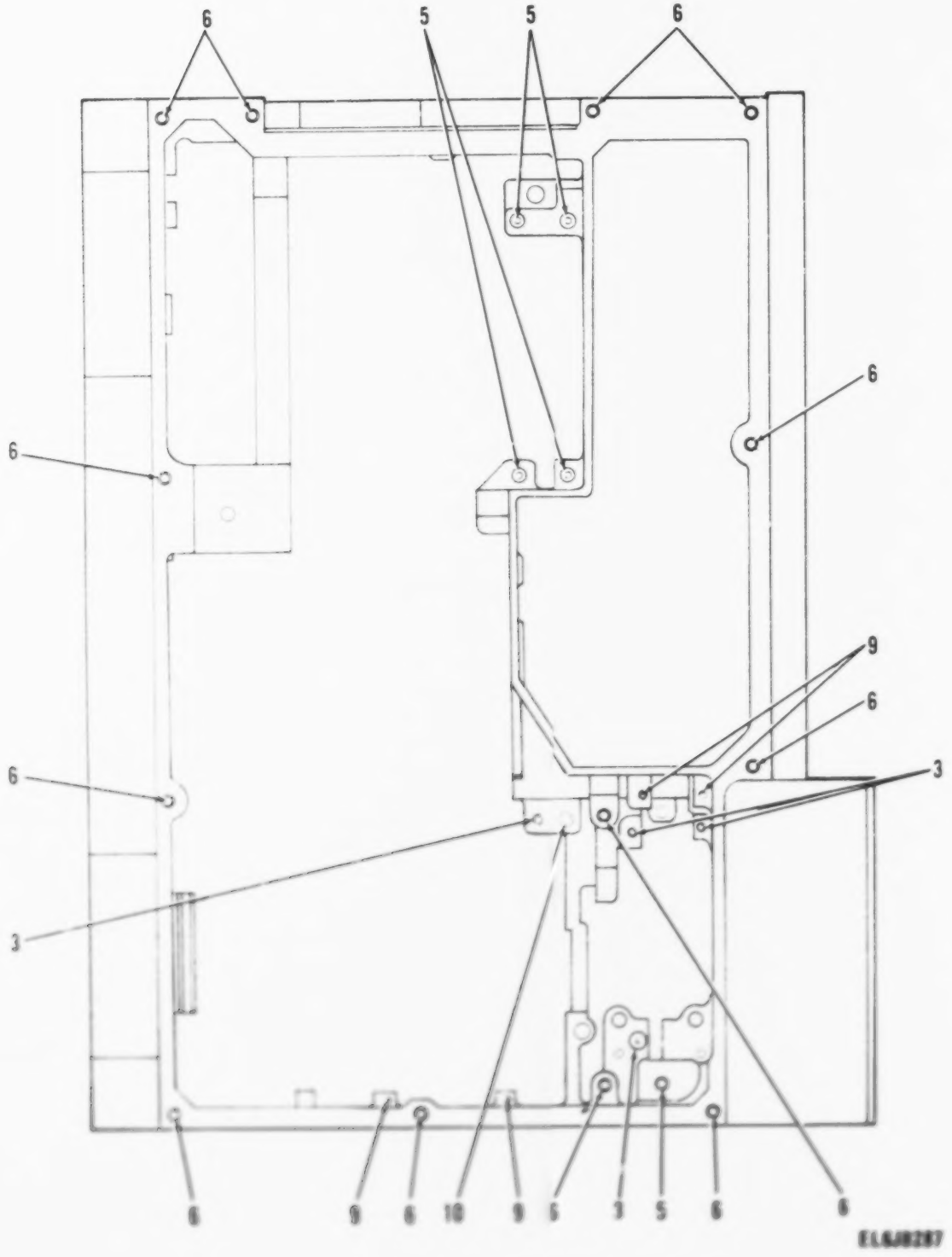

Figure 98. Housing Assembl (Sheet 3 of 5).

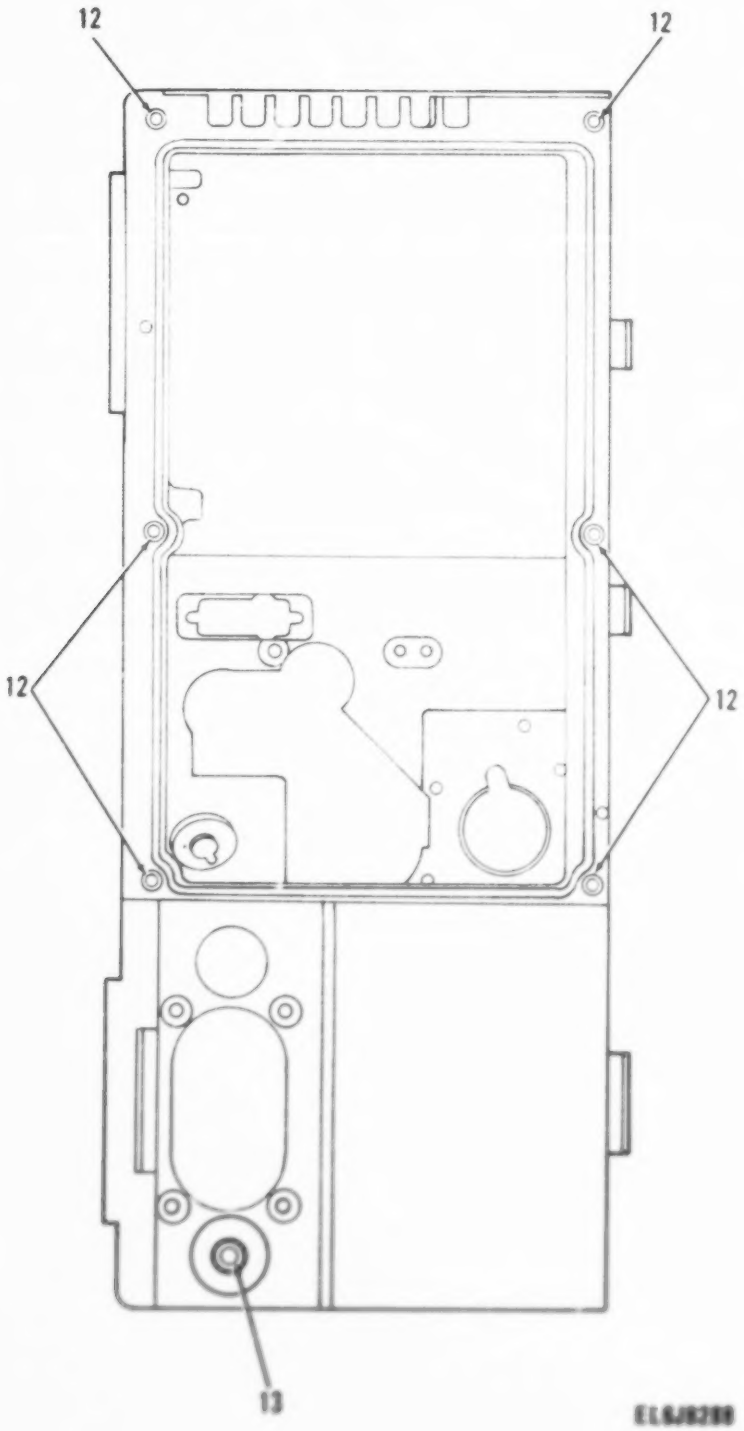

Figure 90. Housing Assembly (Sheet 4 of 5).

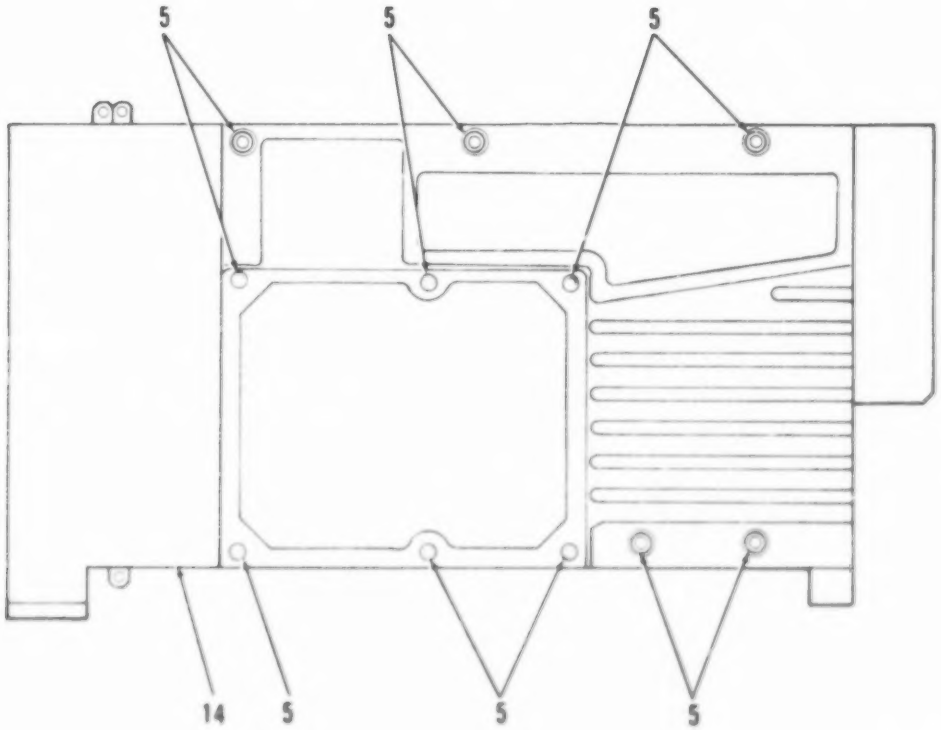

Figure 98. Housing Assembly (Sheet 5 of 5).

(1) ILLUSTRATION (A) FIG NO	(1) ILLUSTRATION (B) ITEM NO	(2) SMR CODE	(3) NATIONAL STOCK NUMBER	(4) FSCM	(5) PART NUMBER	(6) DESCRIPTION / USABLE ON CODE	(7) U/M	(8) QTY INC IN UNIT
						GROUP 0103 06 HOUSING ASSEMBLY		
						SM-D-614163		
98	1	PAHZZ	5340-00-823-5327	73957	MM16432-18	INSERT,SCREW THREAD	EA	8
98	2	XBHZZ		80063	SM-B-614168	PLATE	EA	1
98	3	PAHZZ	5340-00-853-6424	73957	N11240-18	INSERT,SCREW THREAD	EA	22
98	4	PAHZZ	5305-00-958-5483	96906	MS35190-221	SCREW,MACHINE	EA	4
98	5	PAHZZ	5340-00-823-5249	73957	MM13832-18	INSERT,SCREW THREAD	EA	22
98	6	PAHZZ	5340-00-853-6712	73957	MM16432-18	INSERT,SCREW THREAD	EA	10
98	7	PAHZZ	5340-00-854-9263	73957	MS13832-18	INSERT,SCREW THREAD	EA	2
98	8	PAHZZ	5340-00-823-5330	73957	N16432-18	INSERT,SCREW THREAD REPAIR	EA	3
98	9	PAHZZ	5340-00-823-5334	73957	38656-18	INSERT,SCREW THREAD	EA	10
98	10	PAHZZ	5340-00-853-6711	73957	N13832-18	INSERT,SCREW THREAD	EA	2
98	11	PAHZZ	5340-00-853-6396	80063	SM-B-614167	INSERT,SCREW THREAD	EA	3
98	12	PAHZZ	5340-00-823-5250	73957	MM19032-18	INSERT,SCREW THREAD	EA	7
98	13	PADZZ	3120-00-461-4328	80063	SM-B-614166	BUSHING,SLEEVE	EA	1
98	14	AADDD		80063	SM-E-614165	HOUSING	EA	1

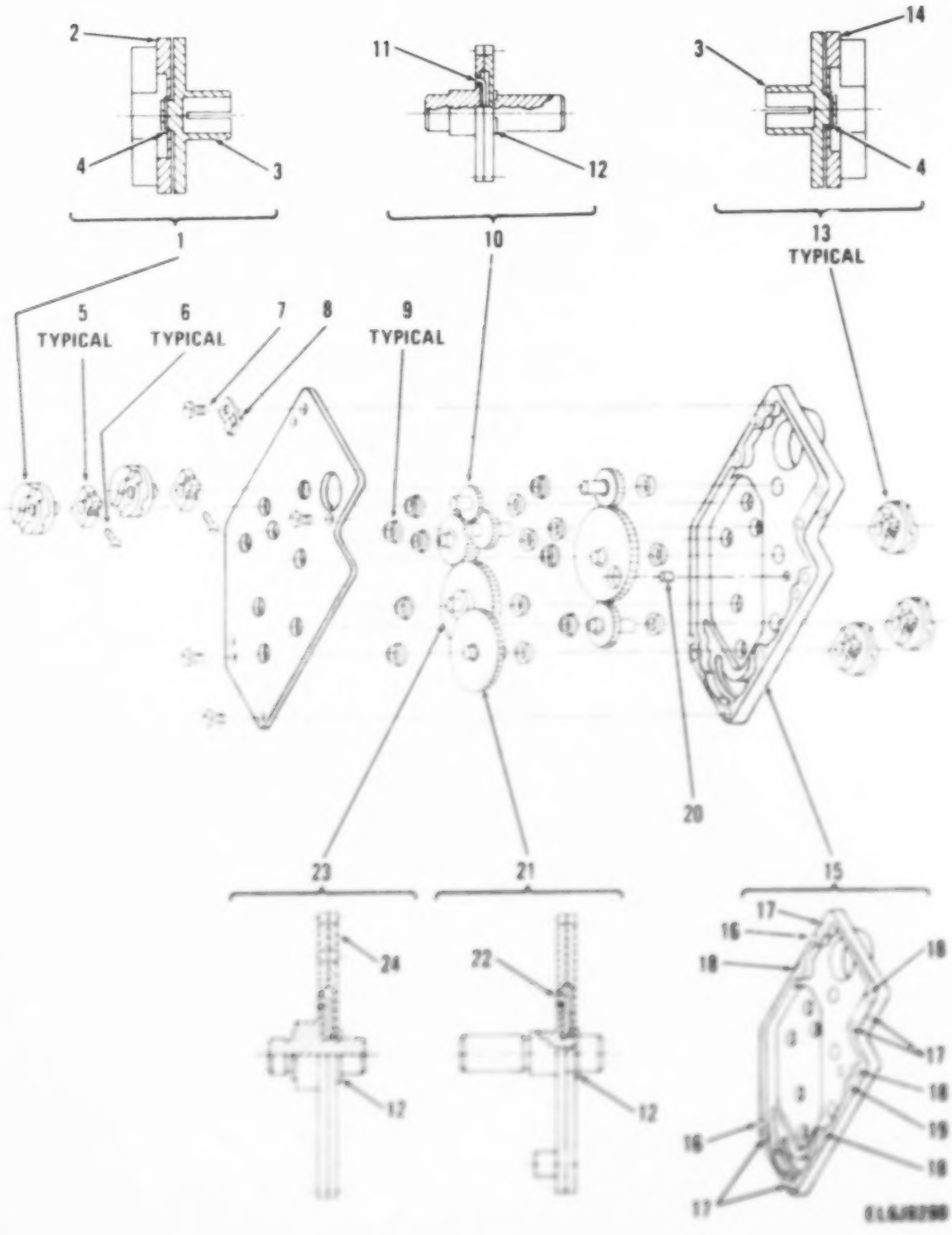

Figure 95. Gear Set Assembly, Intermediate Gear Train.

(1) ILLUSTRATION (a) FIG NO	(b) ITEM NO	(2) SMP CODE	(3) NATIONAL STOCK NUMBER	(4) FSCM	(5) PART NUMBER	(6) DESCRIPTION USABLE ON CODE		
						GROUP 0110 GEAR SET ASSEMBLY		
						NINTERMEDIATE GEAR TRAINS		
						AS SM-D-413892		
99	1	PAHHH	3010-00-464-1600	80063	SM-B-413913	COUPLING ASSEMBLY	1A	
99	2	XAHZZ		80063	SM-C-413911-2	COUPLING,CLAMP SPUD	1A	
99	3	PAHZZ	5820-00-932-9933	80063	SM-C-413910	HUB,COUPLER	1A	
99	4	PAHZZ	5365-00-263-5877	79136	5100-15-1	RING,RETAINING	1A	
99	5	PAHZZ	5820-00-883-5967	80063	SM-C-413899	CLAMP,HUB	1A	
99	6	PAHZZ	5305-00-221-0147	80063	SM-C-413900-2	SCREW,CAP,SOCKET HD	1A	
99	7	PAHZZ	5305-00-558-4889	96906	MS35223-14	SCREW,MACHINE	1A	
99	8	PAHZZ	5340-01-127-4139	80063	SM-B-413901	CLIP,SPRING TENSION	1A	
99	9	PAHZZ	3120-00-884-2469	80063	SM-B-413898	BEARING,SLEEVE	1A	
99	10	PAHDD	3020-00-891-1850	80063	SM-C-413915	GEAR,ANTIBACKLASH	1A	
99	11	XDDZZ		80063	SM-C-413919-2	SPRING,HELICAL	1A	
99	12	PADZZ	5365-00-598-1493	79136	5103-18-H	RING,RETAINING	1A	
99	13	PAHHH	5821-00-250-2022	80063	SM-B-413908	COUPLING ASSEMBLY	1A	
99	14	XAHZZ		80063	SM-C-413911-1	RECEIVER-TRANSMITTER	1A	
99	15	XBHDD		80063	SM-D-413902	GEAR SET HSG ASSY	1A	
99	16	PAHZZ	5315-00-917-4495	96906	MS16556-25	PIN,STRAIGHT,HEADED	1A	
99	17	PADZZ	5340-00-853-6424	73957	N11740-18	INSERT,SCREW THREAD	1A	
99	18	PAHZZ	5340-00-853-6711	73957	N13832-18	INSERT,SCREW THREAD	1A	
99	19	XBHZZ	5315-00-196-0617	73957	CP4-062X375-50	PIN,GROOVED,HEADED	1A	
99	20	PADZZ	5315-00-058-9727	96906	MS16562-229	PIN,SPRING	1A	
99	21	PAHDZ	3020-00-891-1852	80063	SM-C-413924	GEAR,ANTIBACKLASH	1A	
99	22	XDDZZ		80063	SM-C-413919-4	SPRING,HELICAL	1A	
99	23	XAHDD		80063	SM-C-413921	SPUR GEAR ASSY	1A	
99	24	XDDZZ		80063	SM-C-413910-3	GEAR,SPUR	1A	

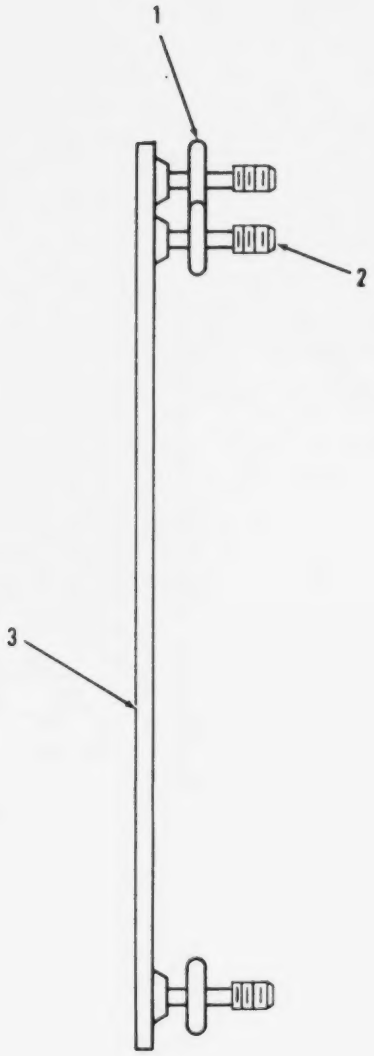

Figure 100. Cover Assembly, Right Side.

best copy available

(1) ILLUSTRATION (a) FIG NO	(1) ILLUSTRATION (b) ITEM NO	(2) SMR CODE	(3) NATIONAL STOCK NUMBER	(4) FSCM	(5) PART NUMBER	(6) DESCRIPTION USABLE ON CODE	(7) U M	(8) QTY INC IN UNIT
						GROUP 0111 COVER ASSEMBLY (RT SIDE)		
						SM-C-414284		
100	1	PAOZZ	5330-00-631-1346	96906	MS28775-005	PACKING,PREFORMED	EA	6
100	2	PAOZZ	5305-00-957-7033	80063	SM-B-414287	SCREW,EXTERNALLY RE	EA	6
100	3	PAOZZ		80063	SM-C-414286	COVER,ACCESS	EA	1

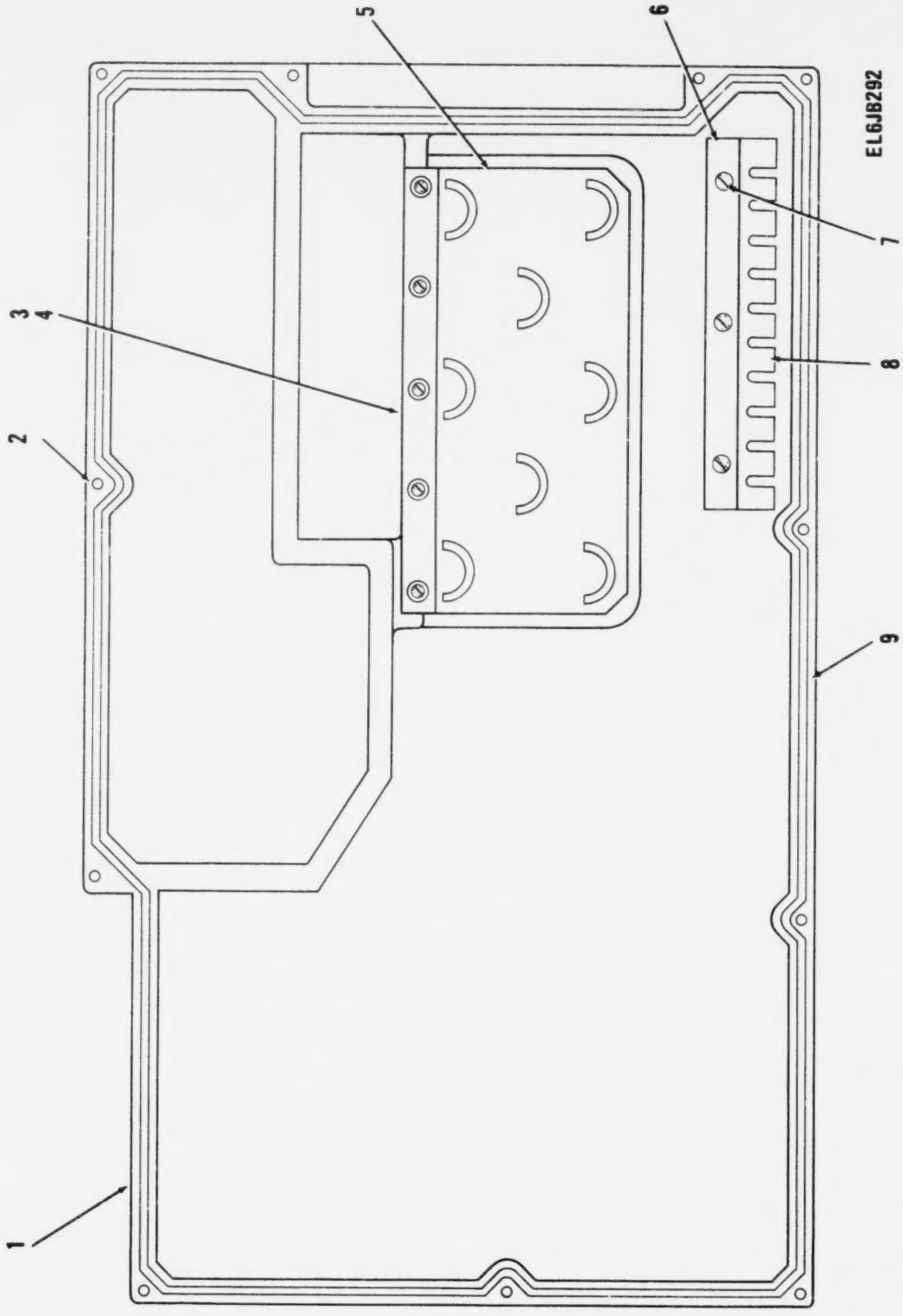

Figure 101. Cover Assembly, Bottom.

(1) ILLUSTRATION (a) FIG NO	(1) ILLUSTRATION (b) ITEM NO	(2) SMR CODE	(3) NATIONAL STOCK NUMBER	(4) FSCM	(5) PART NUMBER	(6) DESCRIPTION USABLE ON CODE	(7) U/M	(8) QTY INC IN UNIT
						GROUP 0112 COVER ASSEMBLY (BOTTOM)		
						SM-D-414288		
101	1	XAOHH		80063	SM-D-414294	COVER ASSEMBLY	EA	1
101	2	PAOZZ	5305-00-234-6199	80063	SM-B-413532-1	SCREW,EXTERNALLY RE	EA	11
101	3	PAFZZ	5305-00-762-7482	96906	MS35206-202	SCREW,MACHINE	EA	5
101	4	PAFZZ	5310-00-543-5060	96906	MS35338-39	WASHER,LOCK	EA	5
101	5	XBFZZ		80063	SM-D-414293	PLATE	EA	1
101	6	XBFZZ		80063	SM-B-414292	RETAINER	EA	1
101	7	PAOZZ	5305-00-984-4983	96906	MS24584-23	SCREW,MACHINE	EA	3
101	8	PAOZZ	5999-00-229-6602	80063	SM-C-414291	CLIP,ELECTRICAL	EA	1
101	9	PAFZZ	5330-00-899-3324	80063	SM-C-414114-5	PACKING,PREFORMED	EA	1

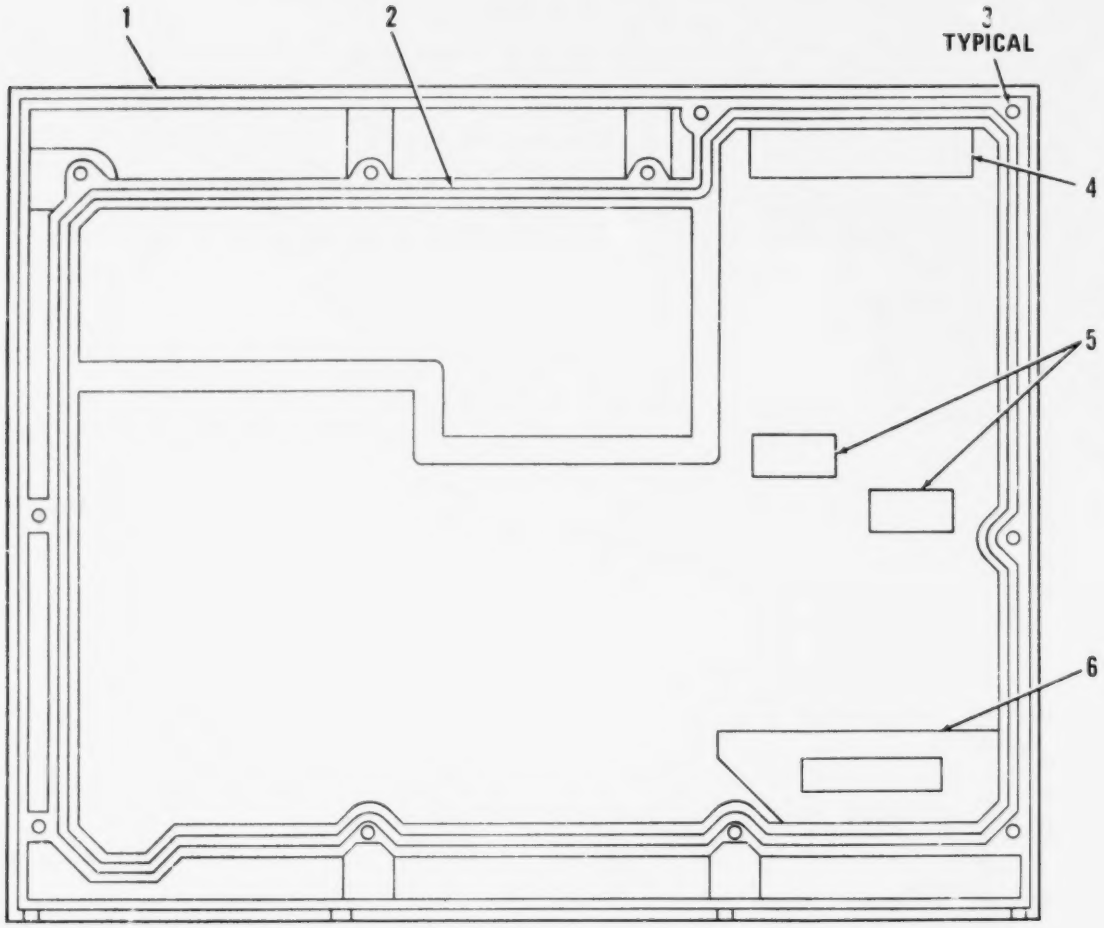

Figure 102. Cover Assembly, Top.

(1) ILLUSTRATION (a) FIG NO	(1) ILLUSTRATION (b) ITEM NO	(2) SMR CODE	(3) NATIONAL STOCK NUMBER	(4) FSCM	(5) PART NUMBER	(6) DESCRIPTION / USABLE ON CODE	(7) U/M	(8) QTY INC IN UNIT
						GROUP 0113 COVER ASSEMBLY (TOP)		
						SM-D-614297		
102	1	XAOZZ		80063	SM-D-414299	COVER	EA	1
102	2	PAFZZ	5330-00-856-3289	80063	SM-C-414114-7	PACKING,PREFORMED	EA	1
102	3	PAOZZ	5305-00-234-6199	80063	SM-B-413532-1	SCREW,EXTERNALLY RE	EA	11
102	4	XBFZZ		80063	SM-B-414302-1	PAD THK	EA	1
102	5	XBFZZ		80063	SM-B-414302-6	PAD	EA	2
102	6	XBFZZ		80063	SM-B-414302-8	PAD	EA	1

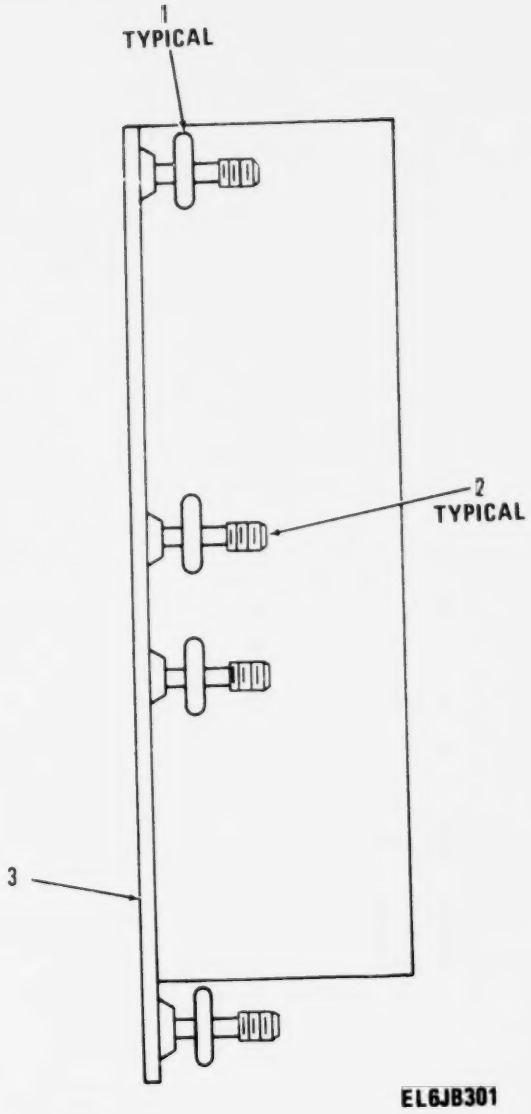

Figure 103. Cover Assembly, Heat Exchanger.

(1) ILLUSTRATION (a) FIG NO	(1) ILLUSTRATION (b) ITEM NO	(2) SMR CODE	(3) NATIONAL STOCK NUMBER	(4) FSCM	(5) PART NUMBER	(6) DESCRIPTION / USABLE ON CODE	(7) U M	(8) QTY INC IN UNIT
						GROUP 0114 COVER ASSEMBLY HEAT EXCHANGER) SM-C-414361		
103	1	PAOZZ	5330-00-631-1346	96906	MS28775-005	PACKING,PREFORMED	EA	8
103	2	PAOZZ	5305-00-957-7033	80063	SM-B-414287	SCREW,EXTERNALLY RE	EA	8
103	3	PAOZZ		80063	SM-D-414363	COVER,ACCESS	EA	1

STOCK NUMBER	FIGURE NO.	ITEM NO.
5970-00-001-1476	89	52
5910-00-007-2001	27	40
5910-00-007-2003	27	38
5910-00-007-2003	56	2
5910-00-007-2003	60	4
5910-00-007-2003	62	3
5910-00-007-2003	93	37
5910-00-007-2003	94	5
5910-00-007-2004	78	8
5910-00-010-6532	9	16
5910-00-010-8666	48	6
5910-00-010-8666	67	11
5910-00-012-5545	75	10
5910-00-012-5547	48	3
5910-00-012-5549	67	10
5310-00-013-4530	89	11
5935-00-013-9837	29	2
5935-00-013-9837	87	5
5910-00-018-8913	48	2
5950-00-042-9865	12	2
5950-00-043-0423	36	8
5310-00-045-3296	2	85
5310-00-045-3296	77	4
5310-00-045-3296	84	61
5310-00-045-3296	93	53
5310-00-045-3299	76	8
5310-00-045-3299	84	54
5310-00-045-4007	1	11
5310-00-045-4007	2	27
5310-00-045-4007	26	3
5310-00-045-4007	49	11
5310-00-045-4007	57	15
5310-00-045-4007	76	6
5310-00-045-4007	84	39
5310-00-045-4007	89	10
5940-00-050-2308	26	70
5940-00-050-2308	29	23
5940-00-050-2308	84	49
5910-00-050-8126	2	65
5940-00-051-6257	2	114
5940-00-051-6257	29	43
5940-00-051-6257	83	6
5940-00-051-6257	92	42
5320-00-054-5038	49	21
5305-00-054-5637	1	17
5305-00-054-5637	7	10
5305-00-054-5637	18	11
5305-00-054-5637	26	68
5305-00-054-5637	27	5
5305-00-054-5637	64	6
5305-00-054-5637	84	7
5305-00-054-5637	90	18
5305-00-054-5637	92	24
5305-00-054-5637	93	26
5305-00-054-5641	62	35
5935-00-054-5853	88	4
5305-00-054-6671	93	47
5340-00-056-9942	4	22
5310-00-057-0573	27	19
5940-00-057-7415	95	1
5820-00-057-7756	1	47
5910-00-058-5871	83	1
5315-00-058-9698	90	2
5315-00-058-9727	99	20
5935-00-059-2640	97	24
5950-00-059-3904	29	30
5355-00-059-9188	2	3
5305-00-060-3225	14	11
5305-00-060-3225	22	2
5910-00-061-6668	69	9
5910-00-061-7043	71	4
5910-00-061-7044	52	6
5910-00-061-7044	54	9
5961-00-064-2379	25	14
5961-00-064-2379	78	2
5961-00-064-2379	81	6
5905-00-068-8265	75	27
5325-00-071-8949	97	17
5905-00-081-6135	83	4
5320-00-081-7418	4	19
5320-00-081-7418	5	25
5320-00-081-7418	6	27
5320-00-081-7418	7	25
5320-00-081-7418	8	36
5320-00-081-7418	12	21
5320-00-081-7418	23	34
5320-00-081-7418	24	32
5310-00-081-8087	95	3
5961-00-082-4073	78	3
5940-00-082-4746	92	43
5940-00-082-4922	2	24
5940-00-082-4922	84	9
5940-00-082-5002	23	36
5940-00-082-5002	24	35
5305-00-082-6789	90	29
5310-00-087-0057	30	14
5310-00-087-0057	72	9
5820-00-087-0059	11	2
5820-00-087-0061	3	1
5820-00-087-0061	10	1
5820-00-087-0062	10	4
5820-00-087-0089	11	1
5961-00-087-6047	2	30
5961-00-087-6047	25	15
5961-00-087-6047	26	38
5961-00-087-6047	60	1
5961-00-087-6047	62	1
5961-00-087-6047	75	2
5961-00-087-6047	76	1
5961-00-087-6047	93	8
5961-00-087-6047	94	1
5820-00-089-0911	1	48
5940-00-089-1134	2	74
5930-00-089-7995	18	2
5935-00-089-8050	95	2
5935-00-089-8050	97	3
5970-00-089-8568	2	58
5955-00-089-8584	15	28
5340-00-089-8725	93	17
5905-00-104-8336	84	10
5905-00-104-8342	92	21
5905-00-104-8351	77	27
5905-00-104-8358	9	19
5905-00-104-8358	42	9
5905-00-104-8358	52	13
5905-00-104-8358	54	18
5905-00-104-8358	69	22
5905-00-104-8358	71	9
5905-00-104-8358	73	16
5905-00-104-8358	75	18
5905-00-104-8362	48	19
5905-00-104-8368	12	7
5905-00-104-8368	48	24
5905-00-104-8370	60	17
5905-00-105-7764	9	20
5905-00-105-7764	24	17
5905-00-105-7764	27	46
5905-00-105-7764	44	12
5905-00-105-7764	46	14
5905-00-105-7764	54	22
5905-00-105-7764	56	8
5905-00-105-7764	60	18
5905-00-105-7764	62	21
5905-00-105-7764	69	20
5905-00-105-7764	73	12
5905-00-105-7765	73	21
5905-00-105-7768	36	11
5905-00-105-7768	56	13
5905-00-105-7768	60	16
5905-00-105-7768	75	30
5905-00-106-1247	92	20
5905-00-106-1248	60	26
5905-00-106-1278	4	9
5905-00-106-1278	5	11
5905-00-106-1278	6	13
5905-00-106-1278	27	2
5905-00-106-1278	36	14
5905-00-106-1278	54	31
5905-00-106-1356	7	12
5905-00-106-1356	8	24

STOCK NUMBER	FIGURE NO.	ITEM NO.
5905-00-106-1356	36	10
5905-00-106-1356	52	15
5905-00-106-1356	54	20
5905-00-106-1356	62	19
5905-00-106-1356	67	23
5905-00-106-1356	73	18
5905-00-106-1357	46	18
5905-00-106-1357	48	14
5905-00-106-1357	62	24
5905-00-106-3666	7	17
5905-00-106-3666	27	33
5905-00-106-3666	67	19
5905-00-106-3666	69	16
5905-00-106-3666	71	7
5905-00-106-3666	75	23
5905-00-106-3668	6	16
5905-00-106-3668	17	3
5905-00-106-3668	24	19
5905-00-106-9344	84	18
5905-00-107-0656	93	36
5905-00-107-0656	94	12
5905-00-108-6922	12	3
5905-00-110-0196	94	10
5905-00-110-0388	9	22
5905-00-110-0388	56	7
5905-00-110-7620	23	23
5905-00-110-7620	25	18
5905-00-110-7620	36	16
5905-00-110-7620	38	9
5905-00-110-7620	44	9
5905-00-110-7620	54	21
5905-00-110-7620	60	25
5905-00-110-7620	62	17
5905-00-110-7620	71	11
5905-00-110-7620	73	20
5905-00-110-7620	94	13
5905-00-110-7622	8	19
5905-00-110-7622	16	15
5905-00-110-7622	17	9
5905-00-110-7622	36	13
5905-00-110-7622	46	15
5905-00-110-7622	52	16
5905-00-110-7622	54	23
5905-00-110-7622	60	21
5905-00-110-7622	62	25
5905-00-110-7622	69	17
5905-00-110-7622	75	22
5905-00-111-1679	23	21
5905-00-111-1679	62	30
5905-00-111-1681	62	29
5905-00-111-4727	8	20
5905-00-111-4727	16	10
5905-00-111-4727	17	11
5905-00-111-4727	44	13
5905-00-111-4727	54	26
5905-00-111-4727	60	14
5905-00-111-4727	62	26
5905-00-111-4734	23	26
5905-00-111-4750	7	9
5905-00-111-4750	38	12
5905-00-111-4750	52	11
5905-00-111-8357	9	21
5905-00-113-4860	24	22
5905-00-113-4860	25	19
5905-00-113-4860	62	22
5905-00-113-4861	52	19
5905-00-113-4861	54	24
5910-00-113-5277	75	12
5910-00-113-5475	60	5
5910-00-113-5475	73	5
5910-00-113-5475	75	5
5910-00-113-5475	75	7
5910-00-113-5689	75	8
5910-00-113-9906	62	7
5910-00-114-0221	56	3
5910-00-114-0221	94	3
5905-00-114-0710	5	14
5905-00-114-0710	46	17
5905-00-114-0710	60	19
5905-00-114-0710	67	27

STOCK NUMBER	FIGURE NO.	ITEM NO.
5905-00-114-0711	6	14
5905-00-114-0711	38	11
5905-00-114-0711	40	9
5905-00-114-0711	48	21
5905-00-114-0711	52	14
5905-00-114-0711	54	19
5905-00-114-0711	56	11
5905-00-114-0711	73	14
5905-00-114-0711	92	19
5905-00-114-5343	23	24
5905-00-114-5343	24	16
5905-00-114-5343	27	41
5905-00-114-5343	42	10
5905-00-114-5343	44	10
5905-00-114-5343	48	22
5905-00-114-5343	71	8
5905-00-115-2261	60	15
5905-00-115-2261	75	25
5905-00-115-3560	27	2
5905-00-115-3560	48	16
5905-00-115-3560	94	16
5905-00-115-3562	73	13
5905-00-115-7953	7	16
5905-00-115-7953	52	12
5905-00-115-8055	27	2
5905-00-116-2394	12	14
5905-00-116-8554	5	13
5905-00-116-8554	12	1
5905-00-116-8554	23	20
5905-00-116-8555	27	2
5905-00-116-8555	36	15
5905-00-116-8555	54	28
5905-00-116-8555	60	22
5905-00-116-8555	75	26
5905-00-116-8556	8	18
5905-00-116-8556	27	2
5905-00-116-8556	54	29
5925-00-118-1098	2	29
5905-00-118-4559	27	2
5905-00-118-4559	94	15
5905-00-119-3503	5	15
5905-00-119-3503	94	9
5905-00-119-3504	8	17
5905-00-119-3504	27	2
5905-00-119-3504	67	26
5905-00-119-3505	67	29
5905-00-119-3505	69	19
5905-00-119-8768	8	22
5905-00-119-8768	42	7
5905-00-119-8768	62	16
5905-00-119-8768	67	22
5905-00-119-8768	71	12
5905-00-119-8768	75	29
5905-00-119-8811	24	18
5905-00-119-8811	67	28
5905-00-119-8812	8	23
5905-00-119-8812	75	28
5905-00-120-9152	7	15
5905-00-120-9154	6	15
5905-00-120-9154	7	11
5905-00-120-9154	12	6
5905-00-120-9154	38	10
5905-00-120-9154	40	8
5905-00-120-9154	42	8
5905-00-120-9154	54	25
5905-00-120-9154	62	20
5821-00-126-4846	10	9
5950-00-126-5064	34	10
5905-00-126-6683	8	25
5905-00-126-6683	23	25
5905-00-126-6683	24	21
5905-00-126-6683	27	35
5905-00-126-6683	36	12
5905-00-126-6683	42	11
5905-00-126-6683	48	20
5905-00-126-6683	52	18
5905-00-126-6683	54	30
5905-00-126-6683	56	9
5905-00-126-6683	62	18
5905-00-126-6683	67	17

STOCK NUMBER	FIGURE NO.	ITEM NO.
5905-00-126-6683	75	19
5821-00-129-6727	19	2
5821-00-129-6730	10	6
5905-00-131-1255	27	32
5905-00-131-1255	60	20
5905-00-131-1255	67	21
5905-00-131-1255	69	15
5905-00-133-0440	38	8
5905-00-135-3973	24	20
5905-00-135-3973	54	32
5905-00-135-3973	56	12
5905-00-135-3973	67	25
5905-00-135-3973	75	20
5905-00-135-3974	48	17
5905-00-135-3974	69	14
5905-00-135-3975	60	23
5905-00-135-3975	75	31
5905-00-135-6045	40	11
5905-00-135-6046	8	21
5905-00-135-6046	67	18
5905-00-135-6046	94	11
5905-00-136-3891	75	24
5961-00-136-4162	27	22
5905-00-136-8405	73	17
5905-00-136-8406	62	23
5310-00-137-3419	2	79
5305-00-137-7924	1	1
5305-00-137-7929	4	14
5305-00-137-7929	5	18
5305-00-137-7929	6	19
5305-00-137-7929	23	28
5305-00-137-7929	24	26
5305-00-138-0183	25	1
5305-00-138-0331	90	5
5305-00-138-0332	76	7
5305-00-138-0333	84	35
5330-00-138-4591	83	15
5310-00-138-9935	33	34
5305-00-139-7007	80	1
5305-00-139-7008	27	23
5305-00-139-7009	80	11
5305-00-139-7010	84	38
5305-00-139-7011	76	5
5305-00-139-7012	26	16
5305-00-139-7013	27	26
5305-00-139-7014	25	5
5305-00-139-7015	89	5
5305-00-139-7016	22	28
5305-00-139-7016	91	5
5305-00-139-7070	14	13
5305-00-139-7070	22	4
5305-00-139-7093	2	96
5305-00-139-7094	33	53
5305-00-139-7163	33	44
5365-00-139-7211	33	106
5365-00-139-7213	33	108
5365-00-140-2019	33	71
5305-00-140-4838	26	31
5905-00-141-0717	5	12
5905-00-141-0717	7	14
5905-00-141-0717	23	22
5905-00-141-0717	27	2
5905-00-141-0717	48	13
5905-00-141-0717	67	30
5905-00-141-0717	69	18
5905-00-141-0717	73	15
5905-00-141-0742	46	16
5905-00-141-0742	48	25
5905-00-141-0742	75	17
5905-00-141-0743	7	13
5905-00-141-0743	16	9
5905-00-141-0743	17	10
5905-00-141-0743	54	27
5905-00-141-0744	42	6
5905-00-141-0744	44	11
5905-00-141-0744	52	17
5905-00-141-0744	67	24
5905-00-141-0744	71	10
5905-00-141-0744	75	21
5905-00-141-1130	29	29
5905-00-141-1131	92	22
5905-00-141-1132	92	18
5905-00-141-1183	38	7
5905-00-141-1183	40	10
5905-00-141-1183	48	23
5905-00-141-1183	60	24
5905-00-141-1183	67	20
5910-00-144-4381	62	8
5910-00-144-4383	27	39
5305-00-145-2119	26	15
5305-00-145-2127	2	68
5305-00-145-4985	27	3
5940-00-147-2699	92	38
5310-00-147-3270	33	43
5310-00-150-4133	15	14
5940-00-150-4602	89	20
5940-00-150-4604	89	54
5305-00-151-6200	10	10
5305-00-151-6200	20	4
5305-00-151-6202	1	2
5305-00-151-6886	9	6
5305-00-151-6886	10	5
5305-00-151-6886	20	10
5305-00-151-6887	33	35
5305-00-151-6888	29	13
5305-00-151-6889	61	3
5305-00-151-6890	10	15
5305-00-151-6891	10	27
5305-00-151-6891	20	7
5305-00-151-6892	10	8
5310-00-151-9002	30	10
5310-00-151-9002	90	12
3110-00-151-9206	33	12
5305-00-152-0546	59	2
5305-00-152-0546	61	2
5910-00-154-0547	25	16
6240-00-155-7836	2	2
5940-00-156-7345	97	2
5360-00-157-7634	33	115
5315-00-158-4406	14	22
5315-00-158-4406	22	9
5315-00-158-4406	91	14
5310-00-158-5129	2	123
5310-00-158-5130	2	18
5310-00-158-5131	2	4
5940-00-159-1252	29	6
5365-00-159-4827	31	5
5910-00-163-7283	36	6
5910-00-163-7283	46	3
5310-00-167-0816	77	30
5310-00-167-0816	83	14
5310-00-167-0816	84	36
5310-00-167-0816	93	25
5310-00-167-0830	49	4
5310-00-167-0833	73	23
5310-00-167-0834	2	41
5310-00-167-0834	2	86
5310-00-167-0834	77	9
5310-00-167-0834	93	51
5340-00-168-7242	15	12
5365-00-168-7244	10	2
5307-00-169-5020	2	80
5950-00-170-4153	23	39
5950-00-170-4153	24	36
5950-00-170-4153	92	31
6210-00-176-4928	2	101
5940-00-177-7974	27	20
5940-00-177-7974	89	53
5365-00-180-7778	33	38
6210-00-183-0513	2	100
3110-00-183-9175	57	9
5910-00-185-9045	56	1
5910-00-185-9045	60	3
5910-00-185-9045	62	9
5310-00-193-7577	50	9
5315-00-194-0617	33	100
5315-00-194-0617	99	19
5930-00-201-4707	26	41
5940-00-204-5088	97	6
5320-00-205-7930	2	104

STOCK NUMBER	FIGURE NO.	ITEM NO.
5320-00-205-7930	26	82
5310-00-209-0788	84	4
5310-00-209-0788	93	23
5305-00-221-0347	31	2
5305-00-221-0347	84	2
5305-00-221-0347	99	6
4010-00-221-9445	2	109
4010-00-221-9445	2	110
5330-00-222-2767	26	43
5930-00-226-6542	30	9
5905-00-228-5506	73	19
5999-00-228-8580	26	27
5999-00-228-8582	26	29
5999-00-229-6602	101	8
5820-00-229-6616	89	29
5820-00-229-6617	86	2
5820-00-229-6619	92	32
5820-00-229-6621	93	1
5820-00-229-6622	77	14
5820-00-229-6623	77	10
5820-00-229-6626	79	3
5820-00-229-6629	84	27
5305-00-230-2121	49	14
5320-00-234-1555	80	13
5305-00-234-6199	101	2
5305-00-234-6199	102	3
5910-00-236-8745	27	47
5960-00-237-0077	90	32
5975-00-241-5146	2	111
3020-00-246-4309	89	12
5820-00-246-4453	81	7
5820-00-247-0177	78	15
5905-00-247-8732	84	19
5955-00-250-1110	18	25
5821-00-250-2022	31	11
5821-00-250-2022	99	13
5910-00-251-1446	75	6
5910-00-251-1446	88	2
5910-00-251-1446	92	5
5305-00-253-5609	1	4
5910-00-254-8169	73	7
5325-00-262-9130	9	9
5325-00-262-9130	34	20
5325-00-262-9130	50	17
5325-00-262-9130	58	23
5325-00-262-9130	65	12
5365-00-263-5877	31	17
5365-00-263-5877	99	4
5960-00-264-3004	90	31
5910-00-267-1753	2	75
5940-00-271-5577	85	7
5325-00-276-4230	29	12
5325-00-276-4993	58	9
5365-00-282-5322	57	5
5365-00-282-5322	84	44
5365-00-285-2114	89	27
5365-00-285-6688	1	27
5325-00-286-2598	30	8
5365-00-286-8718	14	34
5365-00-286-8718	22	21
5365-00-286-8718	91	2
5315-00-291-5471	26	80
5330-00-292-0577	32	15
5310-00-297-9067	33	93
5310-00-297-9067	85	10
5305-00-336-2152	2	90
5305-00-336-2152	89	17
5910-00-342-3618	78	5
3020-00-369-9159	1	25
5940-00-391-8789	10	17
5940-00-391-8789	92	37
5940-00-391-8794	10	19
5940-00-391-8794	10	20
5940-00-391-8794	20	8
5905-00-400-4528	48	12
5820-00-400-5263	92	27
5820-00-400-7260	93	33
5340-00-400-7270	32	14
5950-00-403-0563	40	13
5950-00-403-0568	38	13
5940-00-403-2836	9	26
5940-00-403-2836	10	16
5940-00-403-2836	92	33
5940-00-403-2837	9	27
5940-00-403-2837	10	18
5905-00-403-2839	12	4
5305-00-405-8960	15	13
5305-00-405-8960	32	1
5305-00-405-8960	33	54
5305-00-405-8960	33	97
5305-00-405-8960	77	18
5305-00-405-8960	79	1
5305-00-405-8960	80	2
5305-00-405-8960	83	9
5305-00-405-8960	84	14
5305-00-405-8960	89	37
5305-00-405-8960	89	39
5305-00-405-8960	90	13
5305-00-405-8960	93	30
5905-00-408-5254	78	9
5935-00-417-4206	83	22
3040-00-420-5166	14	31
3040-00-420-5166	91	3
5355-00-421-1714	32	8
5905-00-435-2604	77	2
6210-00-435-4780	2	1
5330-00-442-2464	32	10
5935-00-443-2795	10	26
5935-00-443-2796	10	25
3110-00-446-1726	33	1
5950-00-449-4487	8	14
5910-00-455-3711	5	2
5910-00-455-3711	6	3
5910-00-455-3728	5	4
5910-00-455-3728	6	5
5910-00-455-4304	73	8
5910-00-456-0319	8	5
5820-00-457-0568	7	32
5820-00-457-0569	1	7
5820-00-457-0570	84	43
5820-00-457-0571	84	34
5820-00-457-0572	66	2
5820-00-457-0574	26	23
5820-00-457-0575	1	15
3120-00-461-4328	98	13
5910-00-461-8294	8	4
3010-00-464-1600	99	1
5820-00-464-1676	32	20
5360-00-464-5430	26	44
5910-00-464-8946	7	2
5910-00-464-8946	10	21
5910-00-464-8946	12	18
5910-00-464-8946	24	1
5910-00-477-7548	60	7
5910-00-477-7548	62	6
5910-00-481-0470	60	6
5905-00-484-0277	84	11
5930-00-484-0959	92	28
3020-00-484-3727	26	20
5910-00-484-3743	84	60
5905-00-485-4545	48	15
5905-00-486-6989	27	45
5820-00-491-5256	1	36
5910-00-495-0042	73	6
5910-00-495-0042	75	9
5935-00-497-0791	97	25
5935-00-498-4733	93	18
5930-00-501-1787	26	49
5930-00-501-1787	33	41
5905-00-511-1839	84	59
5995-00-522-3730	14	18
5315-00-531-7880	33	85
5305-00-543-2394	1	10
5310-00-543-2410	2	36
5310-00-543-2410	15	11
5310-00-543-2410	26	17
5310-00-543-2410	27	11
5310-00-543-2410	32	2
5310-00-543-2410	33	37
5310-00-543-2410	58	11

STOCK NUMBER	FIGURE NO.	ITEM NO.
5310-00-543-2410	64	9
5310-00-543-2410	77	19
5310-00-543-2410	84	21
5310-00-543-2410	89	33
5310-00-543-2410	90	15
5310-00-543-2410	90	27
5310-00-543-2410	90	30
5310-00-543-2410	93	6
5310-00-543-2410	97	14
5310-00-543-5060	1	18
5310-00-543-5060	15	9
5310-00-543-5060	18	6
5310-00-543-5060	26	30
5310-00-543-5060	26	67
5310-00-543-5060	27	6
5310-00-543-5060	30	13
5310-00-543-5060	33	8
5310-00-543-5060	64	7
5310-00-543-5060	72	7
5310-00-543-5060	84	8
5310-00-543-5060	93	27
5310-00-543-5060	101	4
5960-00-548-3072	5	17
5960-00-548-3072	6	18
5960-00-548-3072	7	20
5940-00-549-8177	16	3
5365-00-550-5937	14	10
5365-00-550-5937	18	22
5365-00-550-5937	22	8
5365-00-550-5937	33	104
5365-00-550-5937	90	17
5365-00-550-5937	91	9
5305-00-551-0156	22	6
5940-00-552-5120	81	8
5905-00-552-5490	2	99
5940-00-553-2471	2	121
5961-00-556-2091	54	3
5305-00-558-4887	2	92
5305-00-558-4889	2	35
5305-00-558-4889	15	10
5305-00-558-4889	26	74
5305-00-558-4889	27	10
5305-00-558-4889	33	36
5305-00-558-4889	33	95
5305-00-558-4889	64	8
5305-00-558-4889	77	17
5305-00-558-4889	84	30
5305-00-558-4889	89	51
5305-00-558-4889	90	14
5305-00-558-4889	99	7
5310-00-576-0900	27	14
5961-00-577-6214	2	47
5305-00-579-2139	31	6
5305-00-582-5807	31	9
5310-00-582-9176	2	73
5310-00-582-9176	26	34
5310-00-582-9176	26	47
5310-00-582-9176	32	5
5310-00-582-9176	34	14
5310-00-582-9176	50	8
5310-00-582-9176	58	15
5310-00-582-9176	65	9
5310-00-582-9176	77	25
5310-00-582-9176	81	5
5910-00-583-1589	4	4
5910-00-583-1589	24	5
5910-00-583-4891	92	2
5330-00-584-0265	2	112
5330-00-584-0266	26	86
5330-00-584-0266	32	16
5310-00-596-7691	83	7
5365-00-598-1493	33	2
5365-00-598-1493	86	8
5365-00-598-1493	89	13
5365-00-598-1493	99	12
5365-00-598-1494	26	18
5305-00-614-0266	31	4
5305-00-614-0286	92	26
5940-00-614-0537	84	22
5940-00-614-0537	97	13
5315-00-614-3586	33	118
5961-00-615-0367	27	15
5940-00-615-2474	91	7
5910-00-615-9452	8	6
5910-00-615-9452	24	8
5310-00-616-3554	2	77
5310-00-616-3554	26	72
5310-00-616-3554	27	17
5310-00-616-3554	84	23
5305-00-616-8543	93	42
5355-00-616-9659	2	7
5910-00-617-4322	69	4
5910-00-628-6251	27	34
5330-00-631-1346	100	1
5330-00-631-1346	103	1
5935-00-655-1326	29	7
5310-00-655-9505	26	71
5310-00-660-2971	73	25
5910-00-681-7617	23	4
5910-00-681-7617	40	3
5940-00-681-8184	2	88
5940-00-681-8184	83	11
5940-00-681-8184	93	54
5905-00-682-1330	56	10
5315-00-682-1727	33	92
5905-00-682-4264	48	18
5905-00-682-4264	94	14
5910-00-702-9790	23	10
5950-00-703-0907	7	7
5940-00-706-8090	10	22
5935-00-711-9278	29	28
5970-00-717-2198	93	57
5305-00-719-5329	33	3
5305-00-719-5330	86	7
5305-00-719-5339	86	3
5305-00-719-5342	84	70
5910-00-726-2448	8	7
5910-00-726-2448	92	1
5910-00-726-8695	6	6
5910-00-726-8695	24	7
5910-00-726-8696	8	8
5910-00-726-8696	40	2
5910-00-726-8696	92	8
5935-00-729-0536	29	35
5960-00-729-5343	5	24
5960-00-729-5343	6	26
5960-00-729-5343	7	28
5340-00-729-6763	2	67
5999-00-752-5321	25	13
5999-00-752-5321	27	36
5999-00-752-5321	27	42
5999-00-752-5321	56	16
5999-00-752-5321	60	27
5999-00-752-5321	62	31
5999-00-752-5321	67	34
5999-00-752-5321	75	34
5999-00-752-5321	94	17
5961-00-752-6136	93	21
5961-00-752-6163	36	1
5310-00-754-4264	81	10
5310-00-754-4264	82	7
5910-00-758-6957	29	21
5935-00-760-3219	2	9
5935-00-762-0414	29	38
5935-00-762-0414	29	39
5935-00-762-0414	50	19
5935-00-762-0414	97	20
5305-00-762-7482	15	8
5305-00-762-7482	18	7
5305-00-762-7482	30	12
5305-00-762-7482	33	7
5305-00-762-7482	53	5
5305-00-762-7482	101	3
5340-00-763-0192	85	8
5305-00-764-2964	26	21
5305-00-764-2966	10	7
5999-00-767-0569	84	78
5910-00-781-3239	92	3
5905-00-782-4554	12	8
5340-00-782-8737	2	45

STOCK NUMBER	FIGURE NO.	ITEM NO.
5340-00-782-8737	93	44
5910-00-786-8780	89	23
5935-00-797-5365	29	36
5935-00-800-0813	2	53
5320-00-800-5704	14	16
5320-00-800-5704	93	59
5930-00-803-4570	2	56
5930-00-803-4570	90	9
5910-00-805-6628	54	12
5910-00-805-6628	67	8
5910-00-805-6636	8	10
5910-00-805-6636	71	1
5910-00-806-0668	16	11
5910-00-806-0668	23	5
5910-00-806-0668	54	7
5935-00-807-0211	29	9
5935-00-807-0211	87	2
5935-00-807-0266	26	5
5910-00-807-1527	7	4
5910-00-807-1545	54	11
5365-00-808-0643	30	5
5935-00-813-3483	29	8
5935-00-813-3484	87	3
5340-00-815-4930	32	29
5930-00-815-6364	92	25
5365-00-816-4239	33	45
5970-00-818-3486	93	56
5310-00-818-5424	2	42
5310-00-818-5424	77	29
5905-00-820-4359	62	27
5320-00-821-2831	14	29
5320-00-821-2831	22	26
5940-00-821-6373	2	119
5910-00-822-5682	84	17
5935-00-823-0667	29	25
5935-00-823-0752	2	16
5935-00-823-0753	26	33
5935-00-823-0754	29	37
5930-00-823-0756	33	50
5930-00-823-0758	89	50
5930-00-823-0762	29	22
5930-00-823-0764	2	55
5930-00-823-0764	90	11
5935-00-823-0765	2	14
5935-00-823-0766	95	4
5935-00-823-0775	77	16
5935-00-823-0775	97	26
5935-00-823-0781	97	18
5910-00-823-1339	42	4
5995-00-823-2596	89	36
5995-00-823-2597	89	34
5995-00-823-2598	97	1
5995-00-823-2599	1	39
5995-00-823-2600	1	41
5995-00-823-2602	1	43
5995-00-823-2603	1	42
6105-00-823-2604	2	66
6105-00-823-2605	84	67
5945-00-823-2606	2	44
5995-00-823-2608	1	44
5945-00-823-2609	93	10
5945-00-823-2610	93	7
5925-00-823-2615	2	48
5995-00-823-2934	1	40
5995-00-823-2935	1	46
5995-00-823-2936	29	1
5995-00-823-2937	1	45
5950-00-823-3233	89	8
5950-00-823-3234	89	39
5950-00-823-3235	89	38
5950-00-823-3236	89	9
5950-00-823-3239	2	71
5999-00-823-3244	26	9
5999-00-823-3249	65	10
5340-00-823-5249	32	27
5340-00-823-5249	33	101
5340-00-823-5249	83	21
5340-00-823-5249	85	2
5340-00-823-5249	98	5
5340-00-823-5249	101	11

STOCK NUMBER	FIGURE NO.	ITEM NO.
5340-00-823-5250	98	12
5360-00-823-5296	93	62
5360-00-823-5297	93	60
5340-00-823-5327	85	4
5340-00-823-5327	98	1
5340-00-823-5330	98	8
5340-00-823-5334	26	99
5340-00-823-5334	85	6
5340-00-823-5334	98	9
5340-00-823-5334	101	10
5305-00-823-5826	76	1
5305-00-823-5827	83	17
5305-00-823-5830	84	28
5305-00-823-5831	84	40
5305-00-823-5832	90	26
5305-00-823-5833	1	14
5305-00-823-5834	2	102
5315-00-823-8747	29	41
5315-00-823-8754	26	88
5310-00-823-8759	97	16
5310-00-823-8760	89	18
5310-00-823-8761	89	55
5315-00-823-8762	85	9
5310-00-823-8763	26	40
5315-00-823-8764	1	22
5355-00-823-9789	26	96
5355-00-823-9790	26	97
5355-00-823-9791	26	98
5355-00-823-9792	26	87
5355-00-823-9793	26	95
5355-00-823-9794	26	93
5355-00-823-9795	26	92
5355-00-823-9796	26	91
5355-00-823-9797	26	90
5355-00-823-9798	89	1
5340-00-827-4024	26	101
5940-00-828-8247	18	26
5820-00-832-5504	33	14
5820-00-832-5505	22	13
5820-00-832-5520	14	21
5820-00-832-5521	33	48
5820-00-832-5523	33	4
5820-00-832-5524	22	10
5820-00-832-5525	22	12
5820-00-832-5530	33	22
5820-00-832-5589	33	5
5820-00-832-5590	31	10
5820-00-832-5591	14	23
5820-00-832-5591	91	1
5935-00-832-5593	12	12
5820-00-832-5594	14	4
5820-00-832-5594	91	4
5950-00-832-7999	80	4
5961-00-833-3043	46	1
5305-00-833-8624	89	22
5961-00-837-7262	25	17
3110-00-838-5033	14	9
3110-00-838-5033	22	1
5905-00-838-9210	24	34
5935-00-840-1017	25	4
5910-00-840-1937	92	7
5340-00-840-7418	12	20
5961-00-840-7952	7	8
5961-00-842-9864	36	2
5961-00-842-9864	46	2
5961-00-842-9864	48	1
5961-00-842-9864	54	1
5961-00-842-9864	69	1
5961-00-842-9864	93	11
5315-00-844-5644	14	8
5315-00-844-5644	22	18
5315-00-844-5644	91	15
6240-00-844-9676	4	11
5365-00-845-0286	33	113
5905-00-845-2743	62	28
5961-00-846-9157	75	4
5315-00-847-3735	26	85
5315-00-847-3735	89	31
5915-00-849-3666	50	3
5915-00-849-3667	50	1

STOCK NUMBER	FIGURE NO.	ITEM NO.
5915-00-849-3468	58	8
5935-00-849-5109	29	3
5935-00-849-5110	29	4
5935-00-849-5110	87	4
5935-00-849-5111	29	10
5935-00-849-5111	87	6
5940-00-849-8617	26	8
5940-00-849-8617	97	5
5305-00-849-9046	49	10
5305-00-849-9046	57	14
5320-00-850-2273	2	120
5340-00-852-7297	2	39
5340-00-852-7297	93	35
5955-00-853-5838	15	16
5820-00-853-5884	50	5
5955-00-853-5909	15	1
5820-00-853-5915	2	59
5820-00-853-5916	3	4
5820-00-853-5917	3	6
5820-00-853-5918	3	5
5820-00-853-5921	15	25
5820-00-853-5922	15	24
5930-00-853-5936	2	33
5945-00-853-5945	26	7
5945-00-853-5945	58	4
5945-00-853-5945	77	26
5945-00-853-5946	58	5
5820-00-853-5957	34	12
5820-00-853-5959	34	11
5820-00-853-5960	58	2
5820-00-853-5961	50	6
5820-00-853-5963	50	2
5820-00-853-5967	31	3
5820-00-853-5967	84	1
5820-00-853-5967	99	5
5820-00-853-5968	58	1
5820-00-853-5969	34	7
5820-00-853-5970	34	9
5955-00-853-6027	15	2
5305-00-853-6339	57	16
5355-00-853-6353	2	6
5305-00-853-6362	64	5
5955-00-853-6372	15	19
5995-00-853-6375	50	7
5999-00-853-6378	58	16
5355-00-853-6384	2	17
5340-00-853-6396	98	11
5915-00-853-6400	58	7
5935-00-853-6401	29	18
5935-00-853-6401	58	19
5310-00-853-6422	32	3
5340-00-853-6424	32	23
5340-00-853-6424	33	90
5340-00-853-6424	80	16
5340-00-853-6424	83	20
5340-00-853-6424	85	3
5340-00-853-6424	98	3
5340-00-853-6424	99	17
5910-00-853-6427	40	5
5945-00-853-6450	34	8
5955-00-853-6451	15	3
5305-00-853-6513	18	12
5905-00-853-6516	2	46
5915-00-853-6528	34	1
5955-00-853-6531	15	20
5955-00-853-6532	15	18
5955-00-853-6533	15	17
5999-00-853-6667	97	22
5935-00-853-6673	97	4
5935-00-853-6674	97	8
5935-00-853-6675	97	7
5340-00-853-6711	26	100
5340-00-853-6711	32	22
5340-00-853-6711	33	99
5340-00-853-6711	85	5
5340-00-853-6711	98	10
5340-00-853-6711	99	18
5340-00-853-6712	98	6
5999-00-853-6742	97	21
5999-00-853-6756	50	10
5995-00-853-6775	1	38
5995-00-853-6777	29	5
5935-00-853-6833	29	17
5935-00-853-6838	58	18
5999-00-853-6860	29	19
5999-00-853-6860	58	20
5915-00-853-8583	34	2
5910-00-853-8757	42	3
5310-00-853-9676	2	5
5910-00-853-9696	44	5
5955-00-853-9708	15	5
5935-00-853-9736	10	24
5940-00-853-9850	84	56
5940-00-853-9850	97	9
5950-00-854-2814	58	3
5340-00-854-9243	98	7
5305-00-855-0962	35	4
5305-00-855-0962	37	4
5305-00-855-0962	39	4
5305-00-855-0962	41	4
5305-00-855-0962	43	4
5305-00-855-0962	45	4
5305-00-855-0962	47	4
5305-00-855-0962	53	8
5305-00-855-0962	66	4
5305-00-855-0962	68	4
5305-00-855-0962	72	6
5305-00-855-0962	74	4
5305-00-855-0970	55	4
5330-00-856-3289	102	2
5330-00-856-4754	2	61
5910-00-857-4340	77	28
5910-00-857-5305	16	6
5910-00-857-5305	17	6
5910-00-857-5305	36	4
5910-00-857-5305	42	1
5910-00-857-5305	44	2
5910-00-857-5305	46	4
5910-00-857-5305	48	8
5910-00-857-5305	52	1
5910-00-857-5305	54	5
5910-00-857-5305	60	8
5910-00-857-5305	62	5
5910-00-857-5305	71	2
5910-00-857-5305	94	4
5820-00-858-6464	1	28
5820-00-858-6464	1	37
5820-00-858-6475	93	63
5820-00-858-6476	3	2
5820-00-858-6478	18	4
5999-00-858-6482	49	22
5820-00-858-6483	34	15
5820-00-858-6497	32	7
5820-00-858-6498	93	20
5820-00-858-6499	93	58
5930-00-858-6531	18	29
5315-00-858-6642	1	26
5820-00-859-2585	2	20
5820-00-859-2628	64	11
5935-00-859-2638	49	20
5960-00-860-7710	90	34
5340-00-864-4780	29	14
5365-00-866-2392	89	7
5820-00-871-5015	20	5
5915-00-871-5016	2	23
5935-00-871-5066	84	16
5340-00-871-5107	84	37
5820-00-873-1953	89	46
5340-00-873-2215	1	9
5355-00-874-3594	2	81
5930-00-876-2353	2	97
5935-00-877-2134	29	32
5820-00-878-4608	19	1
5820-00-878-4608	20	1
5955-00-879-1461	15	4
5961-00-879-4617	93	4
5910-00-879-7989	84	29
5910-00-879-7989	88	3
5910-00-881-0337	38	3
5315-00-882-1438	14	27

STOCK NUMBER	FIGURE NO.	ITEM NO.
5315-00-882-1438	22	23
5315-00-882-1438	26	75
5910-00-882-3782	52	7
5910-00-882-3782	54	10
5310-00-883-5931	2	28
5820-00-884-2451	89	49
5820-00-884-2452	89	26
5820-00-884-2453	89	28
5820-00-884-2454	89	47
3020-00-884-2457	84	3
5820-00-884-2458	84	50
3040-00-884-2460	90	16
5820-00-884-2461	90	1
5820-00-884-2463	90	33
5820-00-884-2464	84	58
5820-00-884-2466	1	34
3020-00-884-2467	2	95
3020-00-884-2468	2	89
3120-00-884-2469	32	24
3120-00-884-2469	33	15
3120-00-884-2469	85	11
3120-00-884-2469	86	4
3120-00-884-2469	99	9
5820-00-884-2472	1	24
5360-00-884-2473	1	13
5820-00-884-2475	65	6
5820-00-884-2476	65	4
5820-00-884-2477	65	8
5820-00-884-2478	65	3
5820-00-884-2479	65	5
5870-00-884-2481	19	3
3040-00-884-2483	2	94
5820-00-884-2487	31	7
5360-00-884-2488	32	19
5360-00-884-2488	33	33
5820-00-884-2492	2	51
5360-00-884-2493	26	65
5360-00-884-2494	26	39
9905-00-884-2496	2	108
5820-00-884-2498	2	52
5930-00-884-2572	84	47
5930-00-884-2573	26	84
5930-00-884-2576	33	13
5930-00-884-2578	89	2
5930-00-884-2579	29	24
5910-00-884-2600	84	52
5915-00-884-2601	93	28
5935-00-884-5277	26	32
5935-00-884-5288	78	14
5820-00-884-9960	65	2
5905-00-885-2172	78	12
5950-00-885-8542	84	20
5305-00-889-2997	2	63
5305-00-889-2997	27	18
5305-00-889-2997	58	10
5305-00-889-2997	84	68
5305-00-889-2997	90	24
5305-00-889-2999	26	35
5305-00-889-2999	93	55
5305-00-889-3000	2	76
5305-00-889-3001	2	12
5910-00-890-0554	16	4
5910-00-890-0554	27	44
5910-00-890-0554	36	5
5910-00-890-0554	42	2
5910-00-890-0554	62	4
5910-00-890-0554	67	5
3020-00-891-1850	99	10
3020-00-891-1852	99	21
3040-00-891-1859	26	89
5950-00-891-9145	14	5
5950-00-891-9146	14	2
5950-00-891-9150	22	17
5950-00-891-9158	16	5
5950-00-891-9158	17	8
5950-00-891-9158	36	7
5950-00-891-9158	44	6
5950-00-891-9158	46	10
5950-00-891-9158	48	10
5950-00-891-9158	69	11
5935-00-891-9159	16	17
5935-00-891-9159	17	2
5950-00-891-9165	16	16
5950-00-891-9166	16	8
5961-00-892-0734	27	31
5915-00-892-3011	65	1
5915-00-892-3013	1	16
5910-00-892-3027	36	3
5910-00-892-3027	38	2
5910-00-892-3027	40	4
5910-00-892-3027	46	9
5910-00-892-3027	52	5
5910-00-892-3027	54	6
5910-00-892-3027	78	6
5910-00-892-3048	89	24
5910-00-892-3054	89	56
5935-00-892-3059	97	12
5970-00-892-3196	84	65
5960-00-892-3197	90	35
5985-00-892-3200	2	21
5961-00-892-3672	93	48
5960-00-892-3808	84	51
4140-00-892-5952	84	69
5905-00-892-6328	81	4
5905-00-892-6329	81	2
5905-00-892-6330	81	3
5905-00-892-6542	26	63
5905-00-892-6543	2	91
5999-00-892-8728	92	29
5820-00-896-1842	15	22
5820-00-896-1861	33	24
5820-00-896-1865	33	21
5820-00-896-1868	33	10
5820-00-896-1870	33	28
5820-00-896-1877	33	16
5820-00-896-1885	33	18
5905-00-896-1904	93	29
5950-00-897-6387	14	1
3120-00-897-6873	34	17
3120-00-897-6873	50	11
3120-00-897-6873	58	22
3120-00-897-6873	65	11
3120-00-897-6874	32	26
5330-00-899-3323	26	10
5330-00-899-3324	101	9
5330-00-899-3325	93	9
5950-00-899-3396	92	16
5950-00-899-3399	80	6
5950-00-899-3400	80	5
5950-00-899-3410	92	17
5950-00-899-3413	91	11
5915-00-899-4169	34	4
5915-00-899-7910	34	5
5950-00-901-4629	92	15
5950-00-901-4633	92	13
5950-00-901-4636	92	12
5910-00-901-4641	79	2
5950-00-901-4643	92	14
5950-00-901-4654	80	3
5935-00-901-4669	12	9
5935-00-901-4670	12	11
5935-00-901-4672	12	17
5935-00-901-4673	12	13
5935-00-901-4684	12	15
5999-00-901-4689	84	71
5910-00-901-4692	79	4
5935-00-901-4694	92	23
5935-00-901-4698	89	35
5935-00-901-4717	78	13
5935-00-901-4718	26	36
5935-00-901-4718	58	14
5950-00-901-4735	82	1
5310-00-903-3646	8	30
5950-00-904-1057	4	17
5950-00-904-1057	5	22
5950-00-904-1057	6	23
5950-00-904-1057	7	22
5950-00-904-1057	8	32
5950-00-904-1057	23	41
5950-00-904-1057	24	38

STOCK NUMBER	FIGURE NO.	ITEM NO.
5961-00-911-6015	71	6
5940-00-913-9383	92	41
5940-00-914-3116	57	11
5940-00-914-3116	92	44
5315-00-917-4495	99	16
5910-00-924-4307	4	1
5910-00-924-4307	5	1
5910-00-924-4307	6	2
5910-00-924-4307	7	3
5910-00-924-4307	8	2
5910-00-924-4307	23	11
5910-00-924-4307	24	6
5910-00-924-4307	38	4
5910-00-924-4307	69	6
5961-00-925-3777	44	7
5961-00-926-7397	83	3
5820-00-932-9931	86	5
5820-00-932-9933	31	21
5820-00-932-9933	99	3
5820-00-932-9935	26	42
5310-00-934-9738	62	36
5310-00-934-9739	84	25
5310-00-934-9739	97	15
5310-00-934-9751	2	83
5310-00-934-9751	77	3
5310-00-934-9751	83	8
5310-00-934-9751	84	63
5310-00-934-9751	93	52
5961-00-935-0138	2	84
5961-00-935-0138	77	6
5940-00-937-8028	9	25
5940-00-937-8028	10	23
5940-00-937-8028	20	9
5950-00-937-9833	92	11
5950-00-937-9834	91	12
5930-00-937-9841	26	46
5910-00-938-1015	67	7
5961-00-938-5247	62	2
5961-00-938-5247	75	3
5961-00-938-5249	6	1
5961-00-938-5249	7	1
5961-00-938-5249	9	14
5961-00-938-5250	23	1
5961-00-938-5251	8	1
5961-00-938-5252	38	1
5961-00-938-5253	54	2
5950-00-938-5280	9	17
5950-00-938-5281	9	23
5910-00-938-7506	5	7
5910-00-938-7506	6	9
5910-00-938-7506	8	9
5910-00-938-7506	12	10
5910-00-938-7506	23	3
5910-00-938-7506	24	3
5910-00-938-7517	23	6
5910-00-938-7518	23	9
5910-00-938-7531	46	7
5910-00-938-7532	46	6
5310-00-939-0903	2	50
5310-00-939-0903	93	13
5310-00-939-1063	84	57
5310-00-939-1063	93	31
5961-00-943-4088	84	62
5910-00-947-5702	48	4
5910-00-947-5702	73	4
5905-00-948-4627	62	15
5935-00-948-5867	27	12
5961-00-949-1432	60	10
5961-00-949-1440	60	11
5935-00-949-5647	77	24
5310-00-950-1310	77	11
5310-00-950-1310	84	31
5310-00-950-1310	93	38
5935-00-950-1578	29	15
5310-00-951-4679	1	12
5310-00-951-4679	58	12
5310-00-951-4679	64	15
5310-00-951-4679	84	26
5310-00-951-4679	90	28
5310-00-951-4679	93	3
5320-00-952-7864	14	24
5320-00-952-7864	22	29
5320-00-952-7864	91	6
5820-00-953-4891	89	48
5305-00-954-3487	81	1
5820-00-955-9533	29	34
5910-00-957-0139	26	37
5940-00-957-2683	85	12
5910-00-957-5120	5	3
5910-00-957-5120	6	4
5305-00-957-6263	64	10
5305-00-957-6265	2	13
5305-00-957-6636	32	6
5961-00-957-6865	60	2
5305-00-957-7033	100	2
5305-00-957-7033	103	2
5305-00-958-5483	82	2
5305-00-958-5483	98	4
5305-00-958-6230	26	64
5305-00-958-6382	26	66
5305-00-958-6382	33	42
5305-00-958-6382	75	35
5305-00-958-6382	93	46
5305-00-959-2345	64	2
5950-00-964-7450	24	10
5935-00-975-6265	77	20
5821-00-978-8906	34	6
5305-00-983-6730	18	9
5305-00-983-6730	84	24
5910-00-983-6866	75	11
5935-00-983-7040	97	11
5310-00-983-8483	26	1
5905-00-984-0429	78	11
5305-00-984-4978	2	22
5305-00-984-4982	84	48
5305-00-984-4983	2	34
5305-00-984-4983	84	41
5305-00-984-4983	93	12
5305-00-984-4983	101	7
5305-00-984-4984	2	26
5305-00-984-4984	26	2
5305-00-984-4984	77	31
5305-00-984-4984	83	13
5305-00-984-4984	84	5
5305-00-984-4984	89	19
5305-00-984-4984	93	22
5305-00-984-4988	2	38
5305-00-984-4988	93	24
5305-00-984-4989	1	30
5305-00-984-4989	2	40
5305-00-984-6191	84	53
5305-00-984-6193	84	66
5305-00-984-6194	84	72
5955-00-985-8945	15	23
5365-00-988-0916	26	13
5365-00-988-0916	93	15
5365-00-988-2387	1	23
5305-00-988-5747	15	32
5305-00-988-5747	35	5
5305-00-988-5747	37	5
5305-00-988-5747	39	5
5305-00-988-5747	41	5
5305-00-988-5747	43	5
5305-00-988-5747	45	5
5305-00-988-5747	47	5
5305-00-988-5747	49	1
5305-00-988-5747	51	5
5305-00-988-5747	55	5
5305-00-988-5747	64	3
5305-00-988-5747	66	6
5305-00-988-5747	68	6
5305-00-988-5747	70	6
5305-00-988-5747	74	2
5305-00-988-5747	76	12
5305-00-989-0682	2	57
5305-00-989-0682	27	8
5305-00-989-0682	30	16
5305-00-989-0682	48	29
5305-00-989-0682	56	15
5305-00-989-0682	90	10

STOCK NUMBER	FIGURE NO.	ITEM NO.
5305-00-989-0682	94	18
5935-00-989-5334	29	33
5970-00-989-8333	16	14
5970-00-989-8333	17	13
5970-00-989-8333	36	19
5970-00-989-8333	38	15
5970-00-989-8333	44	17
5970-00-989-8333	67	33
5970-00-989-8333	69	29
5970-00-989-8333	71	16
5970-00-989-8333	73	26
5935-00-990-5580	2	15
5821-00-990-6461	4	10
5821-00-990-6461	5	16
5821-00-990-6461	6	17
5821-00-990-6461	23	27
5821-00-990-6461	24	23
5910-00-990-6806	4	2
5910-00-990-6808	4	3
5910-00-990-6813	5	5
5910-00-990-6813	6	7
5910-00-990-6815	8	3
5910-00-990-6840	7	5
5905-00-992-2593	60	12
5905-00-992-2595	62	14
5910-00-992-3306	46	8
5910-00-992-3306	67	13
5305-00-993-0191	32	18
5305-00-993-0191	53	6
5305-00-993-0191	84	12
5305-00-993-0191	93	5
5961-00-995-2310	67	1
5961-00-995-2310	94	2
5340-00-995-6333	83	12
5820-00-995-8687	1	19
5820-00-999-7295	78	16
5950-01-004-7262	52	8
5950-01-004-7262	54	14
5930-01-011-3169	2	25
5950-01-011-3189	44	14
5950-01-011-3190	44	15
5950-01-011-3191	44	16
5950-01-011-3192	48	26
5950-01-011-3193	71	15
5950-01-011-3195	69	24
5950-01-011-3203	4	8
5950-01-011-3203	5	9
5950-01-011-3203	6	11
5950-01-011-3415	24	24
5950-01-011-3416	36	17
5950-01-011-3417	40	12
5950-01-011-4242	8	26
5950-01-011-4243	52	21
5950-01-011-4243	54	34
5950-01-011-4244	52	20
5950-01-011-4244	54	33
5950-01-011-4245	54	35
5950-01-011-4248	23	17
5950-01-011-4249	24	13
5950-01-011-4799	48	27
5950-01-011-4800	7	19
5950-01-011-4801	7	18
5950-01-011-4802	42	12
5950-01-011-4808	24	14
5950-01-011-4809	46	11
5950-01-011-5527	52	22
5950-01-011-5528	54	36
5950-01-011-5529	71	13
5950-01-012-1367	42	13
5950-01-012-1369	23	18
5950-01-012-3935	25	20
5950-01-012-6300	46	19
5950-01-013-0280	23	15
5950-01-013-0280	24	11
5950-01-013-4181	27	24
5950-01-014-7908	69	26
5990-01-015-7586	2	70
5910-01-016-0116	78	4
5820-01-016-2300	1	33
5905-01-021-3105	84	6
5905-01-024-0806	69	21
5910-01-029-3822	17	7
5910-01-029-3822	52	4
5910-01-029-8906	67	6
5910-01-030-1770	4	5
5910-01-030-1770	5	6
5910-01-030-1770	6	8
5910-01-030-1770	23	8
5910-01-030-1770	48	7
5910-01-030-1771	16	12
5910-01-030-1771	73	2
5910-01-031-0446	23	7
5910-01-031-0447	67	4
5910-01-031-0447	69	10
5910-01-038-5395	71	3
5910-01-038-5395	78	7
5910-01-038-5395	92	6
5910-01-038-7913	52	2
5910-01-038-7913	54	4
5910-01-040-1232	69	5
5910-01-040-1232	73	3
5910-01-043-5772	67	9
5910-01-043-5772	69	2
5910-01-043-6891	54	13
5910-01-043-6891	69	8
5910-01-043-6892	24	4
5910-01-043-6899	52	4
5910-01-043-6899	54	8
5910-01-044-5615	23	2
5910-01-044-5615	24	2
5910-01-044-8563	48	5
5910-01-044-8564	67	12
5910-01-053-6833	73	1
5910-01-055-3572	92	9
5310-01-057-8778	2	116
5310-01-057-8778	81	13
5310-01-057-8778	82	6
5310-01-057-8778	90	20
5910-01-058-0229	69	7
5910-01-058-7492	52	3
5910-01-061-3735	9	15
5310-01-062-6473	29	26
5950-01-064-9308	54	15
5305-01-070-9617	32	12
5820-01-077-4505	1	32
5820-01-092-8024	50	4
5961-01-093-2578	9	18
5821-01-097-4570	32	21
5950-01-098-7909	23	16
5950-01-098-7909	24	12
5950-01-100-0242	54	37
5961-01-100-3849	9	24
5961-01-100-3849	23	29
5961-01-100-3849	56	17
5961-01-100-3849	62	32
5310-01-100-6991	48	30
5310-01-100-6991	56	14
5310-01-100-6991	64	1
5310-01-100-6991	75	36
5310-01-100-6991	93	45
5310-01-100-6991	94	19
5820-01-102-7727	58	17
5330-01-103-5435	29	27
5340-01-104-7017	38	17
5340-01-104-7017	40	16
5340-01-104-7017	48	31
5340-01-104-7017	54	41
5340-01-104-7017	69	28
5895-01-106-1074	61	5
5820-01-124-1468	93	32
5340-01-124-1469	58	13
5940-01-124-3091	90	39
3040-01-124-9365	91	13
4730-01-125-0436	22	19
3020-01-125-0471	86	6
7690-01-125-1398	1	3
5365-01-125-6552	32	13
5940-01-126-0130	90	41
5365-01-126-1353	30	3
5950-01-126-2909	4	7

STOCK NUMBER	FIGURE NO.	ITEM NO.
5950-01-126-2909	5	8
5950-01-126-2909	6	10
5950-01-126-2909	8	12
5950-01-126-2910	8	13
5910-01-126-4735	65	7
5340-01-126-5334	15	7
5305-01-126-7310	89	32
5305-01-126-7312	2	19
5310-01-127-1408	2	82
5310-01-127-1408	77	5
5310-01-127-1408	93	49
5340-01-127-4139	83	10
5340-01-127-4139	99	8
5340-01-127-7906	93	34
5945-01-128-6409	26	6
5820-01-129-1480	20	2
5820-01-129-4157	34	13
5820-01-129-7757	57	8
3040-01-130-4757	22	20
3040-01-131-6228	14	36
3040-01-131-6237	14	33
5999-01-131-6585	97	23
5340-01-132-0727	93	19

FSCM	PART NUMBER	FIGURE NO.	ITEM NO.
07047	A-10012	25	13
07047	A-10012	27	36
07047	A-10012	27	42
07047	A-10012	56	16
07047	A-10012	60	27
07047	A-10012	62	31
07047	A-10012	67	34
07047	A-10012	75	34
07047	A-10012	94	17
07047	A-10042	16	14
07047	A-10042	17	13
07047	A-10042	36	19
07047	A-10042	38	15
07047	A-10042	44	17
07047	A-10042	67	33
07047	A-10042	69	29
07047	A-10042	71	16
07047	A-10042	73	26
60380	AA-116-020-1	84	69
88044	AN565D4H2	2	90
88044	AN565D4H2	89	17
88044	AN6227-1	26	43
88044	AN960-10L	2	41
88044	AN960-10L	2	86
88044	AN960-10L	77	9
88044	AN960-10L	93	51
88044	AN960-3L	49	4
88044	AN960-6	77	30
88044	AN960-6	83	14
88044	AN960-6	84	36
88044	AN960-6	93	25
88044	AN960-8L	73	23
81541	AP2-1A	2	29
81541	AP2-1B	2	48
22494	A1-3-030	26	41
14850	A1-8882D	1	47
14850	A1-8883D	1	48
79963	A291-1	29	6
90925	A500	84	73
97315	BC4469A	56	4
97315	BC4516A	80	5
97315	BC4517	80	4
97315	BC4519	2	71
97315	BC4522	82	1
80205	BR8-600A1-F-26V	26	7
82050	BR8-600A1-F1-26V	58	4
82050	BR8-600A1-F1-26V	77	26
82050	BR8-600A17-F1-26V	93	10
73287	B0W419S6	33	59
97814	C-109-HT	73	32
78553	C-18695SS-012	15	33
78553	C-18695SS-012	25	7
78553	C-18695SS-012	27	27
78553	C-18695SS-012	35	6
78553	C-18695SS-012	37	6
78553	C-18695SS-012	39	6
78553	C-18695SS-012	41	6
78553	C-18695SS-012	43	6
78553	C-18695SS-012	45	6
78553	C-18695SS-012	47	6
78553	C-18695SS-012	49	2
78553	C-18695SS-012	51	6
78553	C-18695SS-012	53	10
78553	C-18695SS-012	55	6
78553	C-18695SS-012	57	2
78553	C-18695SS-012	64	4
78553	C-18695SS-012	66	5
78553	C-18695SS-012	68	5
78553	C-18695SS-012	74	3
78553	C-18695SS-012	76	13
78553	C-18695SS-012	90	8
81349	CC20CH040C	4	4
81349	CC20CH040C	24	5
81349	CC20TH120G	23	12
81349	CC20UJ080G	44	3
81349	CC22CH100C	6	6
81349	CC22CH100C	24	7
81349	CC22CH120G	8	8
81349	CC22CH120G	40	2
81349	CC22CH120G	92	8
81349	CC22CH180G	8	6
81349	CC22CH180G	24	8
81349	CC22CH220G	92	2
81349	CC22CH5R0C	8	7
81349	CC22CH5R0C	92	1
81349	CC22CH7R0D	16	11
81349	CC22CH7R0D	23	5
81349	CC22CH7R0D	54	7
81349	CC22CH8R0C	7	4
81349	CC22CK020C	23	4
81349	CC22CK020C	40	3
81349	CC22RH120G	38	3
81349	CC22RH200G	40	5
81349	CC22SH200G	52	7
81349	CC22SH200G	54	10
81349	CC22SH360G	54	12
81349	CC22SH360G	67	8
81349	CC22SH7R0G	69	9
81349	CC22SK1R0C	52	6
81349	CC22SK1R0C	54	9
81349	CC22TH270G	92	7
81349	CC22UJ060C	42	3
81349	CC22UJ080C	23	10
81349	CC22UJ100C	71	4
81349	CC22UJ150G	42	4
81349	CC22UJ240G	44	5
81349	CC22UJ620G	69	4
81349	CC22UK1R0C	8	10
81349	CC22UK1R0C	71	1
81349	CC30CH300G	54	11
81349	CC30LH470F	46	7
81349	CC30PH470F	46	6
81349	CK61BX471K	75	11
81349	CK62BX102K	84	17
46384	CL-632-1C	26	83
81349	CMR05C100D0DR	73	1
81349	CMR05C7R0D0DR	52	3
81349	CMR05E200J0DR	16	12
81349	CMR05E200J0DR	73	2
81349	CMR05E300G0DR	54	13
81349	CMR05E300G0DR	69	8
81349	CMR05E560G0DR	23	7
81349	CMR05E620F0DL	17	5
81349	CMR05E620F0DR	92	9
81349	CMR05E680G0DR	23	2
81349	CMR05E680G0DR	24	2

FSCM	PART NUMBER	FIGURE NO.	ITEM NO.
81349	CMR05F101GODR	24	4
81349	CMR05F121GODR	52	4
81349	CMR05F121GODR	54	8
81349	CMR05F151FODM	46	5
81349	CMR05F151GODR	4	5
81349	CMR05F151GODR	5	6
81349	CMR05F151GODR	6	8
81349	CMR05F151GODR	23	8
81349	CMR05F151GODR	48	7
81349	CMR05F161JODL	16	7
81349	CMR05F181FODM	36	6
81349	CMR05F181FODM	46	3
81349	CMR05F221FODR	52	2
81349	CMR05F221FODR	54	4
81349	CMR05F221GODR	48	5
81349	CMR05F271GODR	67	9
81349	CMR05F271GODR	69	2
81349	CMR05F301GODR	67	12
81349	CMR05F331GODR	67	4
81349	CMR05F331GODR	69	10
81349	CMR05F391GODR	71	3
81349	CMR05F391GODR	78	7
81349	CMR05F391GODR	92	6
81349	CMR06F102GODR	67	6
81349	CMR06F162GODR	69	7
81349	CMR06F302GODR	69	5
81349	CMR06F302GODR	73	3
81349	CMR06F511GODR	17	7
81349	CMR06F511GODR	92	4
72136	CM05FC251GN3	44	1
72136	CM06FC431JN3	44	4
71616	CPC-1953-6B	2	39
71616	CPC-1953-6B	93	35
81349	CQ05A1KC223K3	27	34
71468	DAM-11W1P	88	4
71468	DAMF11W1S	97	24
71468	DBMMF17W2S	97	25
72136	DM15F511G	8	4
72136	DM15F511K	8	5
14850	D1-88928	1	49
99515	EP-6D-1	75	10
99515	EP-6D-10	2	65
99515	EP-6D-11	83	1
99515	EP-6D-12	26	37
99515	EP-6D-3	48	2
99515	EP-6D-6	48	3
99515	EP-6D-7	67	10
00213	E2762	79	2
95566	FB0460-1810-0	23	39
95566	FB0460-1810-0	24	36
95566	FB0460-1810-0	92	31
38443	FC-1220-FF	18	27
38443	FC-1220-FF	33	19
38443	FC-1624-FF	18	23
38443	FC-1624-FF	33	6
98291	FT-SM-32 TUR	92	43
98291	FT-SM-60	91	7
98291	FT-SM-706-P62	33	80
05009	FT-SM-87L1	14	6
98291	FT-1000	85	7
98291	FTSM-14-P20-BLK	9	25
98291	FTSM-14-P20-BLK	10	23
98291	FTSM-14-P20-BLK	20	9
98291	FTSM-14-P20-BRN	9	26
98291	FTSM-14-P20-BRN	10	16
98291	FTSM-14-P20-BRN	92	33
98291	FTSM-14-P20-VIO	9	27
98291	FTSM-14-P20-VIO	10	18
81349	FT030B01	92	38
81349	FT032B01	10	17
81349	FT032B01	92	37
81349	FT033B01	10	19
81349	FT033B01	10	20
81349	FT033B01	20	8
81349	FT039B01	10	22
30655	F92-1660-26	48	30
30655	F92-1660-26	56	14
30655	F92-1660-26	64	1
30655	F92-1660-26	75	36
30655	F92-1660-26	93	45
30655	F92-1660-26	94	19
30655	F92-1660-40	2	73
30655	F92-1660-40	26	34
30655	F92-1660-40	26	47
30655	F92-1660-40	32	5
30655	F92-1660-40	34	14
30655	F92-1660-40	50	8
30655	F92-1660-40	58	15
30655	F92-1660-40	65	9
30655	F92-1660-40	77	25
30655	F92-1660-40	81	5
76348	GB221	58	9
15801	GB35J1	62	15
01121	GM1025	81	3
01121	GM1805	81	2
01121	GM1815	81	4
01121	GM2205	93	29
73957	GP4-062X375-50	33	100
73957	GP4-062X375-50	99	19
73957	GP4-125X375-50	32	25
73957	GP4-125X375-50	85	1
01121	GWE-6166A	2	46
72982	HD-15	84	29
72982	HD-15	88	3
99515	HE1-104E	48	4
99515	HE1-104E	73	4
73957	HM16432-18	98	6
06915	HN-800	8	30
03877	HP35W-1C-4	2	82
03877	HP35W-1C-4	77	5
03877	HP35W-1C-4	93	49
03877	HP35W-1C-5	2	87
03877	HP35W-1C-5	77	8
03877	HP35W-1C-5	93	50
73957	HS13832-18	98	7
81349	JAN1N1202A	2	84
81349	JAN1N1202A	77	6
81349	JAN1N270	54	3
81349	JAN1N2992B	93	4
81349	JAN1N3611	60	2
81349	JAN1N3998RA	84	62
81349	JAN1N4249	78	3
81349	JAN1N483B	27	31
81349	JAN1N538	2	47
81349	JAN1N645	2	30
81349	JAN1N645	25	15
81349	JAN1N645	26	38
81349	JAN1N645	60	1
81349	JAN1N645	62	1
81349	JAN1N645	75	2
81349	JAN1N645	78	1
81349	JAN1N645	93	8
81349	JAN1N645	94	1
81349	JAN1N649	25	14
81349	JAN1N649	78	2
81349	JAN1N649	81	6
81349	JAN1N752A	67	1
81349	JAN1N752A	94	2
81349	JAN1N757A	46	1
81349	JAN1N759A	75	4
81349	JAN1N914	36	2
81349	JAN1N914	46	2
81349	JAN1N914	48	1
81349	JAN1N914	54	1
81349	JAN1N914	69	1
81349	JAN1N914	93	11
81349	JAN1N965B	36	1
81349	JAN2N1142	67	16
81349	JAN2N1412A	83	3
81349	JAN2N158	27	15
81349	JAN2N2219A	60	10
81349	JAN2N2905A	60	11
81349	JAN2N2907A	44	7
81349	JAN2N297A	93	21
81349	JAN2N3251A	71	6
81349	JAN2N328A	60	9
81349	JAN2N328A	62	13
81349	JAN2N328A	75	16
81349	JAN2N328A	94	6
81349	JAN2N335	56	5

FSCM	PART NUMBER	FIGURE NO.	ITEM NO.
81349	JAN2N335	62	10
81349	JAN2N335	73	10
81349	JAN2N335	75	14
81349	JAN2N335	94	7
81349	JAN2N3792	27	22
81349	JAN2N499A	7	8
81349	JAN2N499A	16	13
81349	JAN2N499A	17	12
81349	JAN2N499A	36	9
81349	JAN2N499A	38	6
81349	JAN2N499A	40	7
81349	JAN2N499A	42	5
81349	JAN2N499A	44	8
81349	JAN2N499A	46	12
81349	JAN2N499A	48	11
81349	JAN2N499A	67	15
81349	JAN2N5028	8	16
81349	JAN2N5028	52	9
81349	JAN2N5028	54	16
81349	JAN2N697	25	17
81349	JAN5686	90	32
81349	JAN6205	5	17
81349	JAN6205	6	18
81349	JAN6205	7	20
81349	JAN7843	84	51
91929	JX-46	2	55
91929	JX-46	90	11
81349	LC35YT2	2	100
81349	LH89/1	2	101
03038	LL51957-12	14	11
03038	LL51957-12	22	2
03038	LP35223-13	93	4
03038	LP35223-27	2	8
03038	LP35223-29	2	19
00141	L2-2	2	67
38443	M-0816-FF	30	2
75351	ML18E 11.525MHZ	67	32
96906	MS0035431-8	2	88
96906	MS0035431-8	83	11
96906	MS0035431-8	93	54
96906	MS134352	57	9
96906	MS134354	14	9
96906	MS134354	22	1
96906	MS14046-7	52	8
96906	MS14046-7	54	14
96906	MS14046-8	36	8
96906	MS15795-2	72	9
96906	MS16535-11	14	29
96906	MS16535-11	22	26
96906	MS16535-12	4	19
96906	MS16535-12	5	25
96906	MS16535-12	6	27
96906	MS16535-12	7	25
96906	MS16535-12	8	36
96906	MS16535-12	12	21
96906	MS16535-12	23	34
96906	MS16535-12	24	32
96906	MS16535-13	14	24
96906	MS16535-13	22	29
96906	MS16535-13	91	6
96906	MS16535-152	2	120
96906	MS16535-27	49	21
96906	MS16535-64	14	16
96906	MS16535-64	93	59
96906	MS16555-625	33	92
96906	MS16556-25	99	16
96906	MS16562-189	26	80
96906	MS16562-190	26	85
96906	MS16562-190	89	31
96906	MS16562-191	90	2
96906	MS16562-193	14	27
96906	MS16562-193	22	23
96906	MS16562-193	26	75
96906	MS16562-194	14	8
96906	MS16562-194	22	18
96906	MS16562-194	91	15
96906	MS16562-195	26	88
96906	MS16562-209	99	20
96906	MS16562-212	33	118
96906	MS16625-1025	30	5
96906	MS16626-4177	33	71
96906	MS16629-1025	30	3
96906	MS16632-4025	14	10
96906	MS16632-4025	22	8
96906	MS16632-4025	91	9
96906	MS16633-1012	33	45
96906	MS16633-4037	14	34
96906	MS16633-4037	22	21
96906	MS16633-4037	91	2
96906	MS16634-1025	89	27
96906	MS171434	18	33
96906	MS171434	26	45
96906	MS171436	33	85
96906	MS171504	29	41
96906	MS17160-4	4	22
96906	MS19060-4810	33	12
96906	MS20426A3-3	80	13
96906	MS20450C8-4	33	81
96906	MS20450C8AD-6	26	82
96906	MS20450C8AD6	2	104
96906	MS21044N06	95	3
96906	MS21209C0420	26	101
96906	MS21209C0615	32	29
96906	MS21318-13	1	4
96906	MS24547-1	2	56
96906	MS24547-1	90	9
96906	MS24584-23	2	34
96906	MS24584-23	84	41
96906	MS24584-23	93	12
96906	MS24584-23	101	7
96906	MS24629-12	55	4
96906	MS24629-3	35	4
96906	MS24629-3	37	4
96906	MS24629-3	39	4
96906	MS24629-3	41	4
96906	MS24629-3	43	4
96906	MS24629-3	45	4
96906	MS24629-3	47	4
96906	MS24629-3	53	8
96906	MS24629-3	66	4
96906	MS24629-3	68	4
96906	MS24629-3	72	6
96906	MS24629-3	74	4
96906	MS25082-2	73	25
96906	MS25237-327	2	2
96906	MS27183-2	30	14
96906	MS27183-3	1	12
96906	MS27183-3	58	12
96906	MS27183-3	64	15
96906	MS27183-3	84	26
96906	MS27183-3	90	28
96906	MS27183-3	93	3
96906	MS27183-4	77	11
96906	MS27183-4	84	31
96906	MS27183-4	93	38
96906	MS27183-5	26	1
96906	MS28775-005	100	1
96906	MS28775-005	103	1
96906	MS28775-007	32	15
96906	MS28775-010	26	86
96906	MS28775-010	32	16
96906	MS28775-012	2	112
96906	MS3181-14N	2	15
96906	MS35190-210	64	10
96906	MS35190-211	64	2
96906	MS35190-221	82	2
96906	MS35190-221	98	4
96906	MS35190-223	32	6
96906	MS35190-224	26	64
96906	MS35190-234	2	13
96906	MS35190-271	81	1
96906	MS35206-202	15	8
96906	MS35206-202	18	7
96906	MS35206-202	30	12
96906	MS35206-202	33	7
96906	MS35206-202	53	5
96906	MS35206-202	101	3
96906	MS35206-205	2	57
96906	MS35206-205	27	8
96906	MS35206-205	30	16

FSCM	PART NUMBER	FIGURE NO.	ITEM NO.
96906	MS35206-205	48	29
96906	MS35206-205	56	15
96906	MS35206-205	90	10
96906	MS35206-205	94	18
96906	MS35206-206	26	66
96906	MS35206-206	33	42
96906	MS35206-206	75	35
96906	MS35206-206	93	46
96906	MS35206-212	32	18
96906	MS35206-212	53	6
96906	MS35206-212	84	12
96906	MS35206-212	93	5
96906	MS35206-215	2	63
96906	MS35206-215	27	18
96906	MS35206-215	58	10
96906	MS35206-215	84	68
96906	MS35206-215	90	24
96906	MS35206-217	26	35
96906	MS35206-217	93	55
96906	MS35206-218	18	9
96906	MS35206-218	84	24
96906	MS35206-221	2	22
96906	MS35206-225	84	48
96906	MS35206-227	2	26
96906	MS35206-227	26	2
96906	MS35206-227	77	31
96906	MS35206-227	83	13
96906	MS35206-227	84	5
96906	MS35206-227	89	19
96906	MS35206-227	93	22
96906	MS35206-228	2	38
96906	MS35206-228	93	24
96906	MS35206-229	1	30
96906	MS35206-229	2	40
96906	MS35206-230	2	76
96906	MS35206-231	2	12
96906	MS35206-243	84	53
96906	MS35206-245	84	66
96906	MS35206-246	84	72
96906	MS35223-11	84	45
96906	MS35223-13	15	13
96906	MS35223-13	32	1
96906	MS35223-13	33	54
96906	MS35223-13	33	97
96906	MS35223-13	77	18
96906	MS35223-13	79	1
96906	MS35223-13	80	2
96906	MS35223-13	83	9
96906	MS35223-13	84	14
96906	MS35223-13	89	37
96906	MS35223-13	89	59
96906	MS35223-13	90	13
96906	MS35223-13	93	30
96906	MS35223-14	2	35
96906	MS35223-14	15	10
96906	MS35223-14	26	74
96906	MS35223-14	27	10
96906	MS35223-14	33	36
96906	MS35223-14	33	95
96906	MS35223-14	64	8
96906	MS35223-14	77	17
96906	MS35223-14	84	30
96906	MS35223-14	89	51
96906	MS35223-14	90	14
96906	MS35223-14	99	7
96906	MS35223-4	18	8
96906	MS35223-4	93	40
96906	MS35223-8	33	40
96906	MS35265-14	2	92
96906	MS35265-27	1	10
96906	MS35265-28	31	9
96906	MS35265-3	93	42
96906	MS35265-30	31	6
96906	MS35265-33	31	4
96906	MS35265-4	92	26
96906	MS35333-36	50	9
96906	MS35335-29	2	77
96906	MS35335-29	26	72
96906	MS35335-29	27	17
96906	MS35335-29	84	23
96906	MS35335-30	84	4
96906	MS35335-30	93	23
96906	MS35335-32	83	7
96906	MS35335-85	84	57
96906	MS35335-85	93	31
96906	MS35335-86	2	50
96906	MS35335-86	93	13
96906	MS35338-39	1	18
96906	MS35338-39	15	9
96906	MS35338-39	18	6
96906	MS35338-39	26	30
96906	MS35338-39	26	67
96906	MS35338-39	27	6
96906	MS35338-39	30	13
96906	MS35338-39	33	8
96906	MS35338-39	64	7
96906	MS35338-39	72	7
96906	MS35338-39	84	8
96906	MS35338-39	93	27
96906	MS35338-39	101	4
96906	MS35338-40	2	36
96906	MS35338-40	15	11
96906	MS35338-40	26	17
96906	MS35338-40	27	11
96906	MS35338-40	32	2
96906	MS35338-40	33	37
96906	MS35338-40	58	11
96906	MS35338-40	64	9
96906	MS35338-40	77	19
96906	MS35338-40	84	21
96906	MS35338-40	89	33
96906	MS35338-40	90	15
96906	MS35338-40	90	27
96906	MS35338-40	90	30
96906	MS35338-40	93	6
96906	MS35338-40	97	14
96906	MS35338-41	1	11
96906	MS35338-41	2	27
96906	MS35338-41	26	3
96906	MS35338-41	49	11
96906	MS35338-41	57	15
96906	MS35338-41	76	6
96906	MS35338-41	84	39
96906	MS35338-41	89	10
96906	MS35338-42	76	8
96906	MS35338-42	84	54
96906	MS35338-43	2	85
96906	MS35338-43	77	4
96906	MS35338-43	84	61
96906	MS35338-43	93	53
96906	MS35340-40	26	71
96906	MS35431-1	84	22
96906	MS35431-1	97	13
96906	MS35431-3	26	70
96906	MS35431-3	29	23
96906	MS35431-3	84	49
96906	MS35649-222	62	36
96906	MS35649-242	84	25
96906	MS35649-242	97	15
96906	MS35649-62	89	11
96906	MS35650-302	2	83
96906	MS35650-302	77	3
96906	MS35650-302	83	8
96906	MS35650-302	84	63
96906	MS35650-302	93	52
96906	MS51021-31	22	6
96906	MS51957-3	1	17
96906	MS51957-3	7	10
96906	MS51957-3	18	11
96906	MS51957-3	26	68
96906	MS51957-3	27	5
96906	MS51957-3	64	6
96906	MS51957-3	84	7
96906	MS51957-3	90	18
96906	MS51957-3	92	24
96906	MS51957-3	93	26
96906	MS51957-46	93	47
96906	MS51957-7	62	35
96906	MS51959-2	10	7
96906	MS51959-4	26	21

FSCM	PART NUMBER	FIGURE NO.	ITEM NO.
96906	MS51963-20	33	3
96906	MS51963-21	86	7
96906	MS51963-22	86	3
96906	MS51963-34	84	70
96906	MS75008-28	12	2
96906	MS75008-32	29	30
96906	MS75008-33	24	10
96906	MS75008-42	7	7
96906	MS77067-2	97	2
96906	MS77070-1	27	20
96906	MS77070-1	89	53
96906	MS77070-3	97	6
96906	MS91525-1	2	7
81349	M24066/2-013	7	24
81349	M24308-3-2	77	20
81349	M24308/2-24	83	22
02615	M37AS440-5CR	80	9
81349	M39003/01-2966	27	40
81349	M39003/01-2993	62	7
81349	M39003/01-3000	56	1
81349	M39003/01-3000	60	3
81349	M39003/01-3000	62	9
81349	M39003/01-3005	60	6
81349	M39003/01-3006	60	5
81349	M39003/01-3006	73	5
81349	M39003/01-3006	75	5
81349	M39003/01-3006	75	7
81349	M39003/01-3009	27	38
81349	M39003/01-3009	56	2
81349	M39003/01-3009	60	4
81349	M39003/01-3009	62	3
81349	M39003/01-3009	93	37
81349	M39003/01-3009	94	5
81349	M39003/01-3015	75	8
81349	M39003/01-3018	56	3
81349	M39003/01-3018	94	3
81349	M39003/01-3021	27	47
81349	M39003/01-3024	62	8
81349	M39003/01-3026	27	39
81349	M39003/01-3032	25	16
81349	M39003/01-3067	73	8
81349	M39003/01-3073	73	7
81349	M39003/01-3076	73	6
81349	M39003/01-3076	75	9
81349	M39003/01-3088	78	8
81349	M39006-09-8717	78	4
81349	M39006/03-1423	9	16
81349	M39006/09-8725	9	15
81349	M39006/19-1023	78	5
81349	M39014-01-0443	29	21
81349	M39014/01-1357	48	6
81349	M39014/01-1357	67	11
81349	M39014/01-1563	75	12
81349	M39022/01-1681	2	75
81312	M4SLRN	93	18
81349	M55155-29-7	57	11
81349	M55155-29-7	92	44
80205	NAS1397P3	83	12
80205	NAS1397P4N	2	45
80205	NAS1397P4N	93	44
80205	NAS620-3L	27	14
80205	NAS620C4	27	19
89730	NE-2X	4	11
73957	NM13832-18	32	27
73957	NM13832-18	33	101
73957	NM13832-18	83	21
73957	NM13832-18	85	2
73957	NM13832-18	98	5
73957	NM13832-18	101	11
73957	NM16432-18	85	4
73957	NM16432-18	98	1
73957	NM19032-18	98	12
73957	N11240-18	32	23
73957	N11240-18	33	90
73957	N11240-18	80	16
73957	N11240-18	83	20
73957	N11240-18	85	3
73957	N11240-18	98	3
73957	N11240-18	99	17
73957	N13832-18	26	100
73957	N13832-18	32	22
73957	N13832-18	33	99
73957	N13832-18	85	5
73957	N13832-18	98	10
73957	N13832-18	99	18
73957	N16432-18	98	8
81349	PC37Q100	89	23
81349	PC50J110	92	3
81349	PC51H160	67	7
81349	PC51J110	46	8
81349	PC51J110	67	13
81349	PC51J5R5	4	1
81349	PC51J5R5	5	1
81349	PC51J5R5	6	2
81349	PC51J5R5	7	3
81349	PC51J5R5	8	2
81349	PC51J5R5	23	11
81349	PC51J5R5	24	6
81349	PC51J5R5	38	4
81349	PC51J5R5	69	6
77820	PT07C12-10S	29	36
77820	PT07C14-19S	29	35
00656	P323S1026	84	60
81349	RCR07G100JS	93	36
81349	RCR07G100JS	94	12
81349	RCR07G101JS	38	7
81349	RCR07G101JS	40	10
81349	RCR07G101JS	48	23
81349	RCR07G101JS	60	24
81349	RCR07G101JS	67	20
81349	RCR07G102JS	23	23
81349	RCR07G102JS	25	18
81349	RCR07G102JS	36	16
81349	RCR07G102JS	38	9
81349	RCR07G102JS	44	9
81349	RCR07G102JS	54	21
81349	RCR07G102JS	60	25
81349	RCR07G102JS	62	17
81349	RCR07G102JS	71	11
81349	RCR07G102JS	73	20
81349	RCR07G102JS	94	13
81349	RCR07G103JS	7	17
81349	RCR07G103JS	27	33
81349	RCR07G103JS	67	19
81349	RCR07G103JS	69	16
81349	RCR07G103JS	71	7
81349	RCR07G103JS	75	23
81349	RCR07G104JS	9	22
81349	RCR07G104JS	56	7
81349	RCR07G105JS	5	13
81349	RCR07G105JS	12	1
81349	RCR07G105JS	23	20
81349	RCR07G121JS	8	23
81349	RCR07G121JS	75	28
81349	RCR07G122JS	27	32
81349	RCR07G122JS	60	20
81349	RCR07G122JS	67	21
81349	RCR07G122JS	69	15
81349	RCR07G123JS	4	9
81349	RCR07G123JS	5	11
81349	RCR07G123JS	6	13
81349	RCR07G123JS	27	2
81349	RCR07G123JS	36	14
81349	RCR07G123JS	54	31
81349	RCR07G124JS	48	12
81349	RCR07G131JS	73	17
81349	RCR07G132JS	48	19
81349	RCR07G134JS	62	29
81349	RCR07G151JS	24	18
81349	RCR07G151JS	67	28
81349	RCR07G152JS	7	12
81349	RCR07G152JS	8	24
81349	RCR07G152JS	36	10
81349	RCR07G152JS	52	15
81349	RCR07G152JS	54	20
81349	RCR07G152JS	62	19
81349	RCR07G152JS	67	23
81349	RCR07G152JS	73	18
81349	RCR07G153JS	27	2
81349	RCR07G153JS	36	15

FSCM	PART NUMBER	FIGURE NO.	ITEM NO.
81349	RCR07G153JS	54	28
81349	RCR07G153JS	60	22
81349	RCR07G153JS	75	26
81349	RCR07G162JS	60	26
81349	RCR07G180JS	7	16
81349	RCR07G180JS	52	12
81349	RCR07G181JS	46	16
81349	RCR07G181JS	48	25
81349	RCR07G181JS	75	17
81349	RCR07G182JS	23	24
81349	RCR07G182JS	24	16
81349	RCR07G182JS	27	41
81349	RCR07G182JS	42	10
81349	RCR07G182JS	44	10
81349	RCR07G182JS	48	22
81349	RCR07G182JS	71	8
81349	RCR07G183JS	27	2
81349	RCR07G183JS	48	16
81349	RCR07G183JS	94	16
81349	RCR07G220JS	6	16
81349	RCR07G220JS	17	3
81349	RCR07G220JS	24	19
81349	RCR07G221JS	24	20
81349	RCR07G221JS	54	32
81349	RCR07G221JS	56	12
81349	RCR07G221JS	67	25
81349	RCR07G221JS	75	20
81349	RCR07G222JS	9	20
81349	RCR07G222JS	24	17
81349	RCR07G222JS	27	46
81349	RCR07G222JS	44	12
81349	RCR07G222JS	46	14
81349	RCR07G222JS	54	22
81349	RCR07G222JS	56	8
81349	RCR07G222JS	60	18
81349	RCR07G222JS	62	21
81349	RCR07G222JS	69	20
81349	RCR07G222JS	73	12
81349	RCR07G223JS	8	18
81349	RCR07G223JS	27	2
81349	RCR07G223JS	54	29
81349	RCR07G224JS	73	21
81349	RCR07G242JS	62	23
81349	RCR07G270JS	24	22
81349	RCR07G270JS	25	19
81349	RCR07G270JS	62	22
81349	RCR07G271JS	5	15
81349	RCR07G271JS	94	9
81349	RCR07G272JS	8	20
81349	RCR07G272JS	16	10
81349	RCR07G272JS	17	11
81349	RCR07G272JS	44	13
81349	RCR07G272JS	54	26
81349	RCR07G272JS	60	14
81349	RCR07G272JS	62	26
81349	RCR07G273JS	8	17
81349	RCR07G273JS	27	2
81349	RCR07G273JS	67	26
81349	RCR07G274JS	7	15
81349	RCR07G301JS	7	9
81349	RCR07G301JS	38	12
81349	RCR07G301JS	52	11
81349	RCR07G330JS	40	11
81349	RCR07G331JS	5	14
81349	RCR07G331JS	46	17
81349	RCR07G331JS	60	19
81349	RCR07G331JS	67	27
81349	RCR07G332JS	8	25
81349	RCR07G332JS	23	25
81349	RCR07G332JS	24	21
81349	RCR07G332JS	27	35
81349	RCR07G332JS	36	12
81349	RCR07G332JS	42	11
81349	RCR07G332JS	48	20
81349	RCR07G332JS	52	18
81349	RCR07G332JS	54	30
81349	RCR07G332JS	56	9
81349	RCR07G332JS	62	18
81349	RCR07G332JS	67	17
81349	RCR07G332JS	75	19
81349	RCR07G333JS	27	2
81349	RCR07G333JS	94	15
81349	RCR07G334JS	48	15
81349	RCR07G361JS	60	17
81349	RCR07G390JS	52	19
81349	RCR07G390JS	54	24
81349	RCR07G392JS	7	13
81349	RCR07G392JS	16	9
81349	RCR07G392JS	17	10
81349	RCR07G392JS	54	27
81349	RCR07G393JS	27	2
81349	RCR07G394JS	73	13
81349	RCR07G431JS	48	17
81349	RCR07G431JS	69	14
81349	RCR07G470JS	12	7
81349	RCR07G470JS	48	24
81349	RCR07G471JS	6	15
81349	RCR07G471JS	7	11
81349	RCR07G471JS	12	6
81349	RCR07G471JS	38	10
81349	RCR07G471JS	40	8
81349	RCR07G471JS	42	8
81349	RCR07G471JS	54	25
81349	RCR07G471JS	62	20
81349	RCR07G472JS	6	14
81349	RCR07G472JS	38	11
81349	RCR07G472JS	40	9
81349	RCR07G472JS	48	21
81349	RCR07G472JS	52	14
81349	RCR07G472JS	54	19
81349	RCR07G472JS	56	11
81349	RCR07G472JS	73	14
81349	RCR07G472JS	92	19
81349	RCR07G473JS	5	12
81349	RCR07G473JS	7	14
81349	RCR07G473JS	23	22
81349	RCR07G473JS	27	2
81349	RCR07G473JS	48	13
81349	RCR07G473JS	67	30
81349	RCR07G473JS	69	18
81349	RCR07G473JS	73	15
81349	RCR07G511JS	12	14
81349	RCR07G512JS	23	21
81349	RCR07G512JS	62	30
81349	RCR07G560JS	38	8
81349	RCR07G561JS	36	11
81349	RCR07G561JS	56	13
81349	RCR07G561JS	60	16
81349	RCR07G561JS	75	30
81349	RCR07G562JS	42	6
81349	RCR07G562JS	44	11
81349	RCR07G562JS	52	17
81349	RCR07G562JS	67	24
81349	RCR07G562JS	71	10
81349	RCR07G562JS	75	21
81349	RCR07G563JS	46	18
81349	RCR07G563JS	48	14
81349	RCR07G563JS	62	24
81349	RCR07G621JS	75	24
81349	RCR07G622JS	73	19
81349	RCR07G680JS	60	23
81349	RCR07G680JS	75	31
81349	RCR07G681JS	8	21
81349	RCR07G681JS	67	18
81349	RCR07G681JS	94	17
81349	RCR07G682JS	8	19
81349	RCR07G682JS	16	15
81349	RCR07G682JS	17	9
81349	RCR07G682JS	36	13
81349	RCR07G682JS	46	15
81349	RCR07G682JS	52	16
81349	RCR07G682JS	54	23
81349	RCR07G682JS	60	21
81349	RCR07G682JS	62	25
81349	RCR07G682JS	69	17
81349	RCR07G682JS	75	22
81349	RCR07G683JS	67	29
81349	RCR07G683JS	69	19
81349	RCR07G752JS	92	16
81349	RCR07G821JS	8	22

FSCM	PART NUMBER	FIGURE NO.	ITEM NO.
81349	RCR07G821JS	42	7
81349	RCR07G821JS	62	16
81349	RCR07G821JS	67	22
81349	RCR07G821JS	71	12
81349	RCR07G821JS	75	29
81349	RCR07G822JS	9	19
81349	RCR07G822JS	42	9
81349	RCR07G822JS	52	13
81349	RCR07G822JS	54	18
81349	RCR07G822JS	69	22
81349	RCR07G822JS	71	9
81349	RCR07G822JS	73	16
81349	RCR07G822JS	75	18
81349	RCR07G910JS	92	22
81349	RCR07G912JS	60	15
81349	RCR07G912JS	75	25
81349	RCR20G101JS	84	18
81349	RCR20G102JS	94	10
81349	RCR20G104JS	84	10
81349	RCR20G151JS	12	3
81349	RCR20G272JS	29	29
81349	RCR20G432JS	92	21
81349	RCR20G470JS	23	26
81349	RCR20G681JS	9	21
81349	RCR32G154JS	77	27
81349	RCR32G221JS	92	20
81349	RCR32G303JS	84	11
81349	RCR32G471JS	84	19
81349	RCR32G9R1JS	27	45
81349	RER65F4021R	84	6
81349	RER70F43R2R	84	59
91637	RH-10173H	93	41
81349	RLR20C8252FR	69	21
98291	RST-SM-1 TUR	2	121
98291	RSTSM1P47	81	8
98291	RSTSM1TURBLUE	2	119
91637	RS2B10001G	12	4
81349	RT10C2L103	75	27
81349	RV6LAYSA252A	2	99
81349	RWR80S10R0FR	78	12
81349	RWR80S49R9FR	78	9
81349	RW69V121	12	8
81349	RW69V200	83	4
81349	RW69V271	78	11
81349	RW74UR180F	83	5
80063	SC-DL-416397	3	4
81349	SE079B01	2	114
81349	SE079B01	29	43
81349	SE079B01	83	6
81349	SE079B01	92	42
81349	SE079B02	85	12
81349	SE13XC04	92	41
81349	SE16XC01	23	36
81349	SE16XC01	24	35
81349	SE18XE01	2	24
81349	SE18XE01	84	9
08544	SE22SL PL	50	14
08544	SE23SL PL	15	30
08544	SE23SL PL	90	6
08544	SE24SL PL	25	8
08544	SE24SL PL	71	21
08544	SE24SL PL	89	41
08544	SE25CD PL	49	7
08544	SE25CD PL	76	10
08544	SE25FIN NONE	57	13
08544	SE34SL PL	92	39
08544	SE36CD PL	18	16
08544	SE36CD PL	18	31
08544	SE45SL PL	79	9
08544	SE54SL PL	49	17
08544	SE54SL PL	64	19
08544	SE54SL PL	76	16
80063	SK-A-921087	24	15
98291	SKT-14-B2BLK	10	26
98291	SKT-14-B2BRN	10	24
98291	SKT-14-B2VIO	10	25
98291	SKT-14-GRN	87	3
98291	SKT-14-VIOLET	29	8
98291	SKT-14-WHITE	29	7
98291	SKT14YELLOW	29	4
98291	SKT14YELLOW	87	4
81312	SLE7SK619	29	15
80063	SM-B-188987	10	8
80063	SM-B-283584	32	12
80063	SM-B-283567	2	109
80063	SM-B-283567	2	110
80063	SM-B-283606	89	32
80063	SM-B-318011-2	90	39
80063	SM-B-318011-3	90	41
80063	SM-B-374808	93	39
80063	SM-B-374809-1	31	13
80063	SM-B-374809-2	31	14
80063	SM-B-374809-3	31	15
80063	SM-B-374809-4	31	16
80063	SM-B-374814	84	64
80063	SM-B-374854	2	68
80063	SM-B-374856	10	14
80063	SM-B-374857	14	35
80063	SM-B-374858	14	22
80063	SM-B-374858	22	9
80063	SM-B-374858	91	14
80063	SM-B-374881	10	10
80063	SM-B-374881	20	4
80063	SM-B-374888	22	7
80063	SM-B-374891	14	14
80063	SM-B-374892	14	13
80063	SM-B-374892	22	4
80063	SM-B-374896	14	12
80063	SM-B-374896	22	3
80063	SM-B-374915	22	19
80063	SM-B-374924	29	31
80063	SM-B-374928	14	30
80063	SM-B-374928	22	27
80063	SM-B-374947	10	12
80063	SM-B-374947	20	3
80063	SM-B-374951-1	15	28
80063	SM-B-374951-2	15	23
80063	SM-B-374954-1	10	13
80063	SM-B-374954-2	14	15
80063	SM-B-374959	22	28
80063	SM-B-374959	91	5
80063	SM-B-374963	65	6
78189	SM-B-374966	14	19
80063	SM-B-374966	22	11
80063	SM-B-374968	14	7
80063	SM-B-374974	60	28
80063	SM-B-374974	62	34
80063	SM-B-374992	90	29
80063	SM-B-413506	1	26
80063	SM-B-413508-3	1	1
80063	SM-B-413508-4	1	2
80063	SM-B-413510	1	24
80063	SM-B-413512	1	22
80063	SM-B-413515	1	9
80063	SM-B-413516	1	23
80063	SM-B-413532-1	101	2
80063	SM-B-413532-1	102	3
80063	SM-B-413532-2	57	16
80063	SM-B-413532-3	49	14
80063	SM-B-413535	49	8
80063	SM-B-413535	57	10
80063	SM-B-413535	76	11
80063	SM-B-413537-1	49	13
80063	SM-B-413537-2	57	20
80063	SM-B-413538	49	9
80063	SM-B-413538	57	3
80063	SM-B-413539	49	6
80063	SM-B-413539	57	12
80063	SM-B-413539	76	9
80063	SM-B-413539	90	7
80063	SM-B-413540	49	3
80063	SM-B-413541	49	5
80063	SM-B-413546-1	49	19
80063	SM-B-413546-1	57	23
80063	SM-B-413546-1	64	18
80063	SM-B-413546-1	76	15
80063	SM-B-413546-1	79	10
80063	SM-B-413554	34	17
80063	SM-B-413554	50	11
80063	SM-B-413554	58	22

FSCM	PART NUMBER	FIGURE NO.	ITEM NO.
80063	SM-B-413554	65	11
80063	SM-B-413559	34	12
80063	SM-B-413562	35	1
80063	SM-B-413592	34	3
80063	SM-B-413595	37	1
80063	SM-B-413611	34	11
80063	SM-B-413614	39	1
80063	SM-B-413634	34	10
80063	SM-B-413637	41	1
80063	SM-B-413650	34	6
80063	SM-B-413653	43	1
80063	SM-B-413670	34	9
80063	SM-B-413673	45	1
80063	SM-B-413699	34	7
80063	SM-B-413702	47	1
80063	SM-B-413751	52	25
80063	SM-B-413751	54	40
80063	SM-B-413757	53	7
80063	SM-B-413767	89	48
80063	SM-B-413782	54	15
80063	SM-B-413785	50	6
80063	SM-B-413789	55	1
80063	SM-B-413797	9	24
80063	SM-B-413797	23	29
80063	SM-B-413797	56	17
80063	SM-B-413797	62	32
80063	SM-B-413804	57	4
80063	SM-B-413806	57	8
80063	SM-B-413837	59	2
80063	SM-B-413837	61	2
80063	SM-B-413852	61	3
80063	SM-B-413860	58	8
80063	SM-B-413882	64	13
80063	SM-B-413883	64	16
80063	SM-B-413888	64	21
80063	SM-B-413898	32	24
80063	SM-B-413898	33	15
80063	SM-B-413898	85	11
80063	SM-B-413898	86	4
80063	SM-B-413898	99	9
80063	SM-B-413901	83	10
80063	SM-B-413901	99	8
80063	SM-B-413908	31	11
80063	SM-B-413908	99	13
80063	SM-B-413913	99	1
80063	SM-B-413930	83	15
80063	SM-B-413933	58	13
80063	SM-B-413944	84	33
80063	SM-B-413952	84	27
80063	SM-B-413961	84	35
80063	SM-B-413962	84	28
80063	SM-B-413964-2	2	32
80063	SM-B-413984	86	2
80063	SM-B-413997	85	13
80063	SM-B-414004-1	89	20
80063	SM-B-414004-2	89	54
80063	SM-B-414008	89	5
80063	SM-B-414009	89	1
80063	SM-B-414011	89	25
80063	SM-B-414012	89	21
80063	SM-B-414014-1	89	55
80063	SM-B-414014-2	89	18
80063	SM-B-414015	89	38
80063	SM-B-414016	89	8
80063	SM-B-414017	89	52
80063	SM-B-414018	89	12
80063	SM-B-414024	15	31
80063	SM-B-414024	89	42
80063	SM-B-414027	89	44
80063	SM-B-414030	89	57
80063	SM-B-414033	89	26
80063	SM-B-414036	89	49
80063	SM-B-414038	89	28
80063	SM-B-414040	89	29
80063	SM-B-414041	89	47
80063	SM-B-414051	90	26
80063	SM-B-414058	90	37
80063	SM-B-414066	92	25
80063	SM-B-414068	92	12
80063	SM-B-414069	92	13
80063	SM-B-414070	92	15
80063	SM-B-414071	92	16
80063	SM-B-414073	92	28
80063	SM-B-414082	92	40
80063	SM-B-414109	84	15
80063	SM-B-414111	84	81
80063	SM-B-414115	93	19
80063	SM-B-414126	84	56
80063	SM-B-414126	47	9
80063	SM-B-414127	93	17
80063	SM-B-414128	93	34
80063	SM-B-414166	98	13
80063	SM-B-414167	98	11
80063	SM-B-414168	98	2
80063	SM-B-414179	66	1
80063	SM-B-414185	67	35
80063	SM-B-414197	65	3
80063	SM-B-414200	70	1
80063	SM-B-414215	65	4
80063	SM-B-414218	68	1
80063	SM-B-414230	93	61
80063	SM-B-414238	65	8
80063	SM-B-414241	74	1
03877	SM-B-414246	67	3
80063	SM-B-414257	72	1
80063	SM-B-414260	72	2
80063	SM-B-414269	73	30
80063	SM-B-414278	76	1
80063	SM-B-414280	75	4
80063	SM-B-414287	100	2
80063	SM-B-414287	103	2
80063	SM-B-414292	101	6
80063	SM-B-414302-1	102	4
80063	SM-B-414302-3	79	6
80063	SM-B-414302-4	58	21
80063	SM-B-414302-6	102	5
80063	SM-B-414302-8	102	6
80063	SM-B-414321	78	16
80063	SM-B-414338	80	8
80063	SM-B-414340	80	14
80063	SM-B-414341	80	12
80063	SM-B-414346	81	7
80063	SM-B-414350	81	11
80063	SM-B-414350	82	4
80063	SM-B-414371	29	44
80063	SM-B-414380	2	58
80063	SM-B-414387	2	49
80063	SM-B-414389	2	79
80063	SM-B-414391	2	80
80063	SM-B-414394	2	4
80063	SM-B-414397	2	115
80063	SM-B-414400	2	18
80063	SM-B-414404	2	31
80063	SM-B-414407	2	20
80063	SM-B-414417	2	37
80063	SM-B-414422	29	13
80063	SM-B-414424	29	20
80063	SM-B-414427	29	11
80063	SM-B-414433	15	14
80063	SM-B-414434	15	21
80063	SM-B-414436	15	26
80063	SM-B-414468	18	1
80063	SM-B-414471	18	14
80063	SM-B-414472	18	15
80063	SM-B-414478	18	19
80063	SM-B-414481	18	21
80063	SM-B-414490	18	25
80063	SM-B-414494	18	17
80063	SM-B-414499	31	5
80063	SM-B-414506	32	17
80063	SM-B-414507	32	19
80063	SM-B-414507	33	33
80063	SM-B-414509	32	3
80063	SM-B-414511	32	10
80063	SM-B-414518	32	26
80063	SM-B-414519	32	11
80063	SM-B-414522	31	1
80063	SM-B-414527	33	30
73957	SM-B-414535-1	33	32
73957	SM-B-414535-2	33	51

FSCM	PART NUMBER	FIGURE NO.	ITEM NO.
80063	SM-B-414537	33	38
80063	SM-B-414542	33	47
80063	SM-B-414543	33	46
80063	SM-B-414544	33	57
80063	SM-B-414545	33	58
80063	SM-B-414546	33	56
80063	SM-B-414547	33	55
80063	SM-B-414548	33	9
80063	SM-B-414549	33	49
80063	SM-B-414550	33	50
80063	SM-B-414551	33	52
80063	SM-B-414553	33	11
80063	SM-B-414559	33	106
80063	SM-B-414564	33	78
80063	SM-B-414568	33	82
80063	SM-B-414583	33	72
80063	SM-B-414594	33	14
80063	SM-B-414596	33	83
80063	SM-B-414608	33	67
80063	SM-B-414612-1	33	61
80063	SM-B-414612-2	33	62
80063	SM-B-414612-3	33	63
80063	SM-B-414614	33	66
80063	SM-B-414615	33	64
80063	SM-B-414616	33	65
80063	SM-B-414626	33	48
80063	SM-B-414628	33	117
80063	SM-B-414629	31	10
80063	SM-B-414635	30	15
80063	SM-B-414636	30	10
80063	SM-B-414636	90	12
80063	SM-B-414646	2	69
80063	SM-B-414657	26	46
80063	SM-B-414658	26	40
80063	SM-B-414659	2	117
80063	SM-B-414661	26	65
80063	SM-B-414663	26	48
80063	SM-B-414667	26	50
80063	SM-B-414675	26	79
80063	SM-B-414708	2	72
80063	SM-B-414712	26	20
80063	SM-B-414714	26	15
80063	SM-B-414716	26	22
80063	SM-B-414720	26	26
80063	SM-B-414722	26	27
80063	SM-B-414725	26	29
80063	SM-B-414728	26	25
80063	SM-B-414732	26	19
80063	SM-B-414738	2	123
80063	SM-B-414739	2	122
80063	SM-B-414745	27	3
80063	SM-B-414746	27	4
80063	SM-B-414762	27	28
80063	SM-B-414763	27	7
80063	SM-B-414766	2	89
80063	SM-B-414773	25	2
80063	SM-B-414776	25	3
80063	SM-B-414786	2	62
80063	SM-B-414789	29	24
80063	SM-B-414795	2	105
80063	SM-B-414796	2	102
80063	SM-B-414797	2	103
80063	SM-B-414801	2	74
80063	SM-B-414808	2	93
80063	SM-B-414819	2	124
80063	SM-B-414820-1	26	12
80063	SM-B-414820-1	93	14
80063	SM-B-414820-2	26	13
80063	SM-B-414820-2	93	15
80063	SM-B-414820-3	93	16
80063	SM-B-414821	30	4
80063	SM-B-414822-1	30	9
80063	SM-B-414899	33	89
80063	SM-B-415684	29	26
80063	SM-B-415688	29	27
80063	SM-B-416307	8	29
80063	SM-B-416318	9	4
80063	SM-B-416319	9	1
80063	SM-B-416320	9	3
80063	SM-B-416325	9	18
80063	SM-B-416338	12	16
80063	SM-B-416339-1	23	35
80063	SM-B-416344-1	10	15
80063	SM-B-416344-2	10	27
80063	SM-B-416344-2	20	7
80063	SM-B-416347	10	28
80063	SM-B-416347	11	3
80063	SM-B-416348	10	2
80063	SM-B-416356-1	4	20
80063	SM-B-416356-1	7	26
80063	SM-B-416356-1	8	37
80063	SM-B-416356-1	23	38
80063	SM-B-416356-1	24	31
80063	SM-B-416361	4	13
80063	SM-B-416361	5	19
80063	SM-B-416361	6	20
80063	SM-B-416361	23	32
80063	SM-B-416361	24	27
80063	SM-B-416363	4	14
80063	SM-B-416363	5	18
80063	SM-B-416363	6	19
80063	SM-B-416363	23	28
80063	SM-B-416363	24	26
80063	SM-B-416368	6	25
80063	SM-B-416368	8	34
80063	SM-B-416373	5	28
80063	SM-B-416373	6	30
80063	SM-B-416373	7	29
80063	SM-B-416374	5	27
80063	SM-B-416374	6	29
80063	SM-B-416374	7	30
80063	SM-B-416376	5	26
80063	SM-B-416376	6	28
80063	SM-B-416376	7	27
18510	SM-B-416385	8	27
80063	SM-B-416392	8	39
80063	SM-B-416399	9	5
80063	SM-B-431134	93	56
80063	SM-B-447252	38	17
80063	SM-B-447252	40	16
80063	SM-B-447252	48	31
80063	SM-B-447252	54	41
80063	SM-B-447252	69	28
80063	SM-B-481749	4	15
80063	SM-B-481749	5	20
80063	SM-B-481749	6	21
80063	SM-B-481749	23	33
80063	SM-B-481749	24	29
80063	SM-B-481750	62	11
80063	SM-B-481757	75	1
80063	SM-B-481758	4	12
80063	SM-B-481760	4	18
80063	SM-B-481760	5	23
80063	SM-B-481760	6	24
80063	SM-B-481760	7	23
80063	SM-B-481760	8	33
80063	SM-B-481760	23	40
80063	SM-B-481760	24	37
80063	SM-B-481760	92	30
80063	SM-B-481761	83	18
80063	SM-B-921083	32	9
80063	SM-C-283573	32	14
80063	SM-C-374802	79	4
80063	SM-C-374805	31	12
80063	SM-C-374807	2	64
30817	SM-C-374812	50	13
80063	SM-C-374813	84	55
80063	SM-C-374815	2	98
80063	SM-C-374822-1	71	5
80063	SM-C-374827-1	2	1
80063	SM-C-374831-4	29	42
80063	SM-C-374839	27	43
80063	SM-C-374842	52	10
80063	SM-C-374842	54	17
80063	SM-C-374842	69	13
80063	SM-C-374844	75	15
80063	SM-C-374852	84	67
80063	SM-C-374859	14	26
80063	SM-C-374866	23	30
80063	SM-C-374866	24	25

FSCM	PART NUMBER	FIGURE NO.	ITEM NO.
80063	SM-C-374867	4	21
80063	SM-C-374867	8	38
80063	SM-C-374868	8	28
80063	SM-C-374877	2	9
80063	SM-C-374884	14	23
80063	SM-C-374884	91	1
80063	SM-C-374885	14	21
80063	SM-C-374886	14	4
80063	SM-C-374896	91	4
80063	SM-C-374887	22	22
80063	SM-C-374890	22	5
80063	SM-C-374895	14	25
80063	SM-C-374895	22	24
80063	SM-C-374898	22	10
80063	SM-C-374899	22	13
80063	SM-C-374913	14	31
80063	SM-C-374913	91	3
80063	SM-C-374914-1	14	36
80063	SM-C-374920	14	18
80063	SM-C-374921	14	28
80063	SM-C-374921	22	25
80063	SM-C-374923	22	12
80063	SM-C-374925	14	33
80063	SM-C-374926	14	32
80063	SM-C-374929	10	9
80063	SM-C-374931	20	2
80063	SM-C-374933	91	10
80063	SM-C-374935	20	6
80063	SM-C-374955	22	20
80063	SM-C-374998	80	3
80063	SM-C-413504-1	1	28
80063	SM-C-413504-2	1	37
80063	SM-C-413511	1	14
80063	SM-C-413513	1	13
80063	SM-C-413531-1	72	8
80063	SM-C-413531-10	18	12
80063	SM-C-413531-11	45	10
80063	SM-C-413531-11	57	14
80063	SM-C-413531-12	76	7
80063	SM-C-413531-3	25	5
80063	SM-C-413531-5	90	5
80063	SM-C-413531-6	25	1
80063	SM-C-413531-7	27	26
80063	SM-C-413531-8	26	16
80063	SM-C-413531-9	76	5
80063	SM-C-413536-1	25	11
80063	SM-C-413536-4	57	19
80063	SM-C-413536-5	49	15
80063	SM-C-413549	49	20
80063	SM-C-413550	49	22
80063	SM-C-413564	35	7
80063	SM-C-413567-1	36	3
80063	SM-C-413567-1	38	2
80063	SM-C-413567-1	40	4
80063	SM-C-413567-1	46	9
80063	SM-C-413567-1	52	5
80063	SM-C-413567-1	54	6
80063	SM-C-413567-1	78	6
80063	SM-C-413567-3	16	4
80063	SM-C-413567-3	27	44
80063	SM-C-413567-3	36	5
80063	SM-C-413567-3	42	2
80063	SM-C-413567-3	62	4
80063	SM-C-413567-3	67	5
80063	SM-C-413570	36	18
80063	SM-C-413571	36	20
80063	SM-C-413574	59	5
80063	SM-C-413574	61	6
80063	SM-C-413574	67	39
80063	SM-C-413574	69	33
80063	SM-C-413574	71	23
80063	SM-C-413574	73	36
80063	SM-C-413574	75	39
80063	SM-C-413575-1	67	38
80063	SM-C-413575-1	69	31
80063	SM-C-413575-1	71	19
80063	SM-C-413575-1	75	38
80063	SM-C-413577	16	5
80063	SM-C-413577	17	8
80063	SM-C-413577	36	7
80063	SM-C-413577	44	9
80063	SM-C-413577	46	10
80063	SM-C-413577	48	10
80063	SM-C-413577	69	11
80063	SM-C-413597	37	7
80063	SM-C-413600	38	16
80063	SM-C-413604	38	13
80063	SM-C-413608	38	14
80063	SM-C-413616	39	7
80063	SM-C-413639	41	7
80063	SM-C-413642	42	14
80063	SM-C-413655	43	7
80063	SM-C-413658	44	18
80063	SM-C-413675	45	7
80063	SM-C-413681	46	21
80063	SM-C-413684	73	28
80063	SM-C-413694	46	20
80063	SM-C-413704	47	7
80063	SM-C-413717	1	36
80063	SM-C-413722	50	10
80063	SM-C-413726	50	2
80063	SM-C-413728	51	3
80063	SM-C-413730	51	1
80063	SM-C-413747	52	24
80063	SM-C-413761	53	2
80063	SM-C-413779	54	37
80063	SM-C-413791	55	7
80063	SM-C-413799	56	18
80063	SM-C-413805	57	7
80063	SM-C-413807	57	17
80063	SM-C-413832-1	29	18
80063	SM-C-413832-1	58	19
80063	SM-C-413832-2	29	19
80063	SM-C-413832-2	58	20
80063	SM-C-413834	58	2
80063	SM-C-413838	59	1
80063	SM-C-413849	58	1
80063	SM-C-413853	61	1
80063	SM-C-413856	62	33
80063	SM-C-413881-1	64	12
80063	SM-C-413881-2	64	13
80063	SM-C-413884-1	65	17
80063	SM-C-413884-2	66	5
80063	SM-C-413884-3	65	18
80063	SM-C-413884-4	80	11
80063	SM-C-413884-5	27	23
80063	SM-C-413884-6	80	1
80063	SM-C-413885	69	17
80063	SM-C-413889	64	11
80063	SM-C-413899	31	3
80063	SM-C-413899	84	1
80063	SM-C-413899	99	5
80063	SM-C-413900-1	2	96
80063	SM-C-413900-2	31	2
80063	SM-C-413900-2	84	2
80063	SM-C-413900-2	99	6
80063	SM-C-413906-2	85	9
80063	SM-C-413906-4	89	30
80063	SM-C-413910	31	21
80063	SM-C-413910	99	3
80063	SM-C-413911-1	31	18
80063	SM-C-413911-1	99	14
80063	SM-C-413911-2	99	2
80063	SM-C-413915	99	10
80063	SM-C-413918-3	99	24
80063	SM-C-413919-2	99	11
80063	SM-C-413919-4	99	22
80063	SM-C-413919-6	33	115
80063	SM-C-413919-7	33	108
80063	SM-C-413921	99	23
80063	SM-C-413924	99	21
80063	SM-C-413937	83	16
80063	SM-C-413945	84	13
80063	SM-C-413950	89	71
80063	SM-C-413951	89	50
80063	SM-C-413955	89	37
80063	SM-C-413963	89	3
80063	SM-C-413986	86	6
80063	SM-C-413987	86	9
80063	SM-C-413988	86	5

FSCM	PART NUMBER	FIGURE NO.	ITEM NO.
80063	SM-C-414001	89	9
80063	SM-C-414002	89	39
80063	SM-C-414003	89	46
80063	SM-C-414007	89	2
80063	SM-C-414007-1	89	4
80063	SM-C-414007-2	89	6
80063	SM-C-414007-3	89	3
80063	SM-C-414020	89	16
80063	SM-C-414021	89	15
80063	SM-C-414022	89	40
80063	SM-C-414025	89	43
80063	SM-C-414032	89	58
80063	SM-C-414047	90	23
80063	SM-C-414049	90	25
80063	SM-C-414053	90	3
80063	SM-C-414056	90	36
80063	SM-C-414060	90	19
80063	SM-C-414062	90	22
80063	SM-C-414084	92	36
80063	SM-C-414088	92	29
80063	SM-C-414091	92	11
80063	SM-C-414093	92	14
80063	SM-C-414096	92	17
80063	SM-C-414108	84	74
80063	SM-C-414114-3	26	10
80063	SM-C-414114-4	2	61
80063	SM-C-414114-5	101	9
80063	SM-C-414114-7	102	2
80063	SM-C-414114-8	93	9
80063	SM-C-414118	97	11
80063	SM-C-414120-1	77	23
80063	SM-C-414120-1	88	5
80063	SM-C-414125	93	7
80063	SM-C-414142	38	5
80063	SM-C-414146	97	19
80063	SM-C-414147	97	16
80063	SM-C-414148-2	29	12
80063	SM-C-414148-4	80	10
80063	SM-C-414149	93	33
80063	SM-C-414156-1	93	60
80063	SM-C-414170	1	21
80063	SM-C-414172	65	1
80063	SM-C-414181	66	7
80063	SM-C-414189	67	31
80063	SM-C-414194	67	14
80063	SM-C-414199	70	2
80063	SM-C-414202	70	7
80063	SM-C-414205	71	17
80063	SM-C-414220	68	7
80063	SM-C-414225	69	27
80063	SM-C-414228	69	25
80063	SM-C-414243	74	7
80063	SM-C-414259	72	10
80063	SM-C-414265	73	34
80063	SM-C-414266	73	9
80063	SM-C-414268	73	27
80063	SM-C-414271-1	73	31
80063	SM-C-414271-2	73	29
80063	SM-C-414276	65	2
80063	SM-C-414284	1	35
80063	SM-C-414286	100	3
80063	SM-C-414291	101	8
80063	SM-C-414306	77	15
80063	SM-C-414307	77	28
80063	SM-C-414312	77	21
80063	SM-C-414315	78	15
80063	SM-C-414330	79	8
80063	SM-C-414344	77	2
80063	SM-C-414349	81	9
80063	SM-C-414349	82	5
80063	SM-C-414351	77	13
80063	SM-C-414354	82	3
80063	SM-C-414356	82	8
80063	SM-C-414361	1	31
80063	SM-C-414372	2	95
80063	SM-C-414373	2	94
80063	SM-C-414376	2	118
80063	SM-C-414381	2	16
80063	SM-C-414388	2	81
80063	SM-C-414393	2	6
80063	SM-C-414399	2	17
80063	SM-C-414401	2	3
80063	SM-C-414406	2	113
80063	SM-C-414409	2	111
80063	SM-C-414423	29	14
80063	SM-C-414432	15	7
80063	SM-C-414435	15	12
80063	SM-C-414438	15	34
30817	SM-C-414439	15	35
80063	SM-C-414440	15	27
80063	SM-C-414443	15	6
80063	SM-C-414449	16	1
80063	SM-C-414458	17	1
80063	SM-C-414466	18	4
80063	SM-C-414470	18	13
80063	SM-C-414475	18	26
80063	SM-C-414476	18	29
80063	SM-C-414477	18	20
80063	SM-C-414483-2	18	35
80063	SM-C-414486	18	24
80063	SM-C-414488	18	34
80063	SM-C-414489	18	32
80063	SM-C-414492	18	3
80063	SM-C-414495	18	18
80063	SM-C-414502-2	32	13
80063	SM-C-414508	32	20
80063	SM-C-414513	32	4
80063	SM-C-414514	32	8
80063	SM-C-414528	33	20
80063	SM-C-414529	33	25
80063	SM-C-414530	33	27
80063	SM-C-414531	33	26
80063	SM-C-414533	33	23
80063	SM-C-414534	33	4
80063	SM-C-414536	33	39
80063	SM-C-414538-1	33	35
80063	SM-C-414538-3	33	53
80063	SM-C-414540	33	29
80063	SM-C-414552	33	43
80063	SM-C-414557-1	33	109
80063	SM-C-414557-2	33	112
80063	SM-C-414558-1	33	110
80063	SM-C-414558-2	33	105
80063	SM-C-414560	33	13
80063	SM-C-414563-2	33	77
80063	SM-C-414566	33	79
80063	SM-C-414575-2	33	114
80063	SM-C-414576	33	21
80063	SM-C-414579	33	10
80063	SM-C-414582	33	73
80063	SM-C-414584	33	28
80063	SM-C-414587	33	16
80063	SM-C-414590-1	33	103
80063	SM-C-414590-2	33	87
80063	SM-C-414591	33	18
80063	SM-C-414597	33	84
80063	SM-C-414601	33	98
80063	SM-C-414603	33	94
80063	SM-C-414607	33	68
80063	SM-C-414621	33	69
80063	SM-C-414634	30	11
80063	SM-C-414637-1	30	6
80063	SM-C-414637-2	30	7
80063	SM-C-414640	30	1
80063	SM-C-414649	2	51
80063	SM-C-414655	26	42
80063	SM-C-414656-1	26	39
80063	SM-C-414656-2	26	44
80063	SM-C-414660	26	73
80063	SM-C-414669	26	76
80063	SM-C-414674	26	81
80063	SM-C-414678	26	59
80063	SM-C-414680-1	26	95
80063	SM-C-414680-10	26	90
80063	SM-C-414680-2	26	96
80063	SM-C-414680-3	26	97
80063	SM-C-414680-4	26	98
80063	SM-C-414680-5	26	87
80063	SM-C-414680-6	26	94
80063	SM-C-414680-7	26	93

FSCM	PART NUMBER	FIGURE NO.	ITEM NO.
80063	SM-C-414680-8	26	92
80063	SM-C-414680-9	26	91
80063	SM-C-414681	26	84
80063	SM-C-414682	26	89
80063	SM-C-414683	26	60
80063	SM-C-414685	26	61
80063	SM-C-414687	26	62
80063	SM-C-414689	26	52
80063	SM-C-414691	26	57
80063	SM-C-414693	26	56
80063	SM-C-414695	26	55
80063	SM-C-414697	26	54
80063	SM-C-414699	26	53
80063	SM-C-414710	26	9
80063	SM-C-414713	26	24
80063	SM-C-414715	26	14
80063	SM-C-414721	26	28
80063	SM-C-414735	2	78
80063	SM-C-414747	27	13
80063	SM-C-414759	27	1
80063	SM-C-414761	27	29
80063	SM-C-414770	2	52
80063	SM-C-414775	25	6
80063	SM-C-414782	25	10
80063	SM-C-414793	2	11
80063	SM-C-414805	69	12
80063	SM-C-414823	29	34
80063	SM-C-414966	33	86
80063	SM-C-414968-1	15	1
80063	SM-C-414968-10	15	16
80063	SM-C-414968-2	15	2
80063	SM-C-414968-3	15	3
80063	SM-C-414968-4	15	4
80063	SM-C-414968-5	15	5
80063	SM-C-414968-6	15	20
80063	SM-C-414968-7	15	19
80063	SM-C-414968-8	15	18
80063	SM-C-414968-9	15	17
80063	SM-C-416300	4	10
80063	SM-C-416300	5	16
80063	SM-C-416300	6	17
80063	SM-C-416300	23	27
80063	SM-C-416300	24	23
80063	SM-C-416306	9	7
80063	SM-C-416310	8	13
80063	SM-C-416311	9	13
80063	SM-C-416316	3	2
80063	SM-C-416317	9	8
80063	SM-C-416321-1	4	7
80063	SM-C-416321-1	5	8
80063	SM-C-416321-1	6	10
80063	SM-C-416321-1	8	12
80063	SM-C-416321-2	23	16
80063	SM-C-416321-2	24	12
80063	SM-C-416327-1	4	8
80063	SM-C-416327-1	5	9
80063	SM-C-416327-1	6	11
80063	SM-C-416327-2	23	18
80063	SM-C-416327-3	24	14
80063	SM-C-416328	7	18
80063	SM-C-416329	7	19
80063	SM-C-416332	23	15
80063	SM-C-416332	24	11
80063	SM-C-416339-2	7	31
80063	SM-C-416352-1	23	17
80063	SM-C-416352-2	24	13
80063	SM-C-416369-1	4	23
80063	SM-C-416369-2	5	29
80063	SM-C-416369-3	6	31
80063	SM-C-416387	8	26
80063	SM-C-416400	24	24
80063	SM-C-416404	24	30
80063	SM-C-439961	84	75
80063	SM-C-481751	1	5
80063	SM-C-921086	1	3
80063	SM-D-188972	11	1
80063	SM-D-188973	12	19
80063	SM-D-188976	11	2
80063	SM-D-188980	3	1
80063	SM-D-188980	10	1
80063	SM-D-188981	10	4
80063	SM-D-188989	19	1
80063	SM-D-283603	32	28
80063	SM-D-374904	14	1
80063	SM-D-374905	14	2
80063	SM-D-374906	14	5
80063	SM-D-374910	91	12
80063	SM-D-374911	91	11
80063	SM-D-374912	22	17
80063	SM-D-374916-1	14	3
80063	SM-D-374916-2	91	13
80063	SM-D-374916-3	22	14
80063	SM-D-374927	14	20
80063	SM-D-374930	10	11
80063	SM-D-374932	10	6
80063	SM-D-374937	22	16
80063	SM-D-374937-1	22	30
80063	SM-D-374937-2	22	33
80063	SM-D-374937-3	22	32
80063	SM-D-374937-4	22	31
80063	SM-D-374937-5	22	34
80063	SM-D-374972	73	11
80063	SM-D-374975	73	33
80063	SM-D-374976	73	24
80063	SM-D-374978	72	5
80063	SM-D-374982	4	16
80063	SM-D-374983	3	7
80063	SM-D-374984	7	32
80063	SM-D-374985	7	21
80063	SM-D-374988	8	31
80063	SM-D-374989	3	3
80063	SM-D-374990	3	5
80063	SM-D-374993	19	2
80063	SM-D-374995	24	28
80063	SM-D-374996	19	3
80063	SM-D-413503	1	16
80063	SM-D-413519	1	29
80063	SM-D-413521	34	2
80063	SM-D-413522	34	1
80063	SM-D-413523	34	5
80063	SM-D-413524	34	4
80063	SM-D-413528	34	13
80063	SM-D-413543	49	16
80063	SM-D-413548	49	23
80063	SM-D-413551	34	15
80063	SM-D-413553	34	16
80063	SM-D-413561	35	2
80063	SM-D-413565	35	3
80063	SM-D-413582	36	17
80063	SM-D-413594	37	2
80063	SM-D-413598	37	3
80063	SM-D-413613	39	2
80063	SM-D-413617	39	3
80063	SM-D-413620	40	15
80063	SM-D-413623	40	12
80063	SM-D-413625	40	13
80063	SM-D-413627	40	14
80063	SM-D-413636	41	2
80063	SM-D-413640	41	3
80063	SM-D-413645	42	12
80063	SM-D-413647	42	13
80063	SM-D-413652	43	2
80063	SM-D-413656	43	3
80063	SM-D-413663	44	14
80063	SM-D-413665	44	15
80063	SM-D-413667	44	16
80063	SM-D-413672	45	2
80063	SM-D-413676	45	3
80063	SM-D-413678	46	22
80063	SM-D-413690	46	19
80063	SM-D-413692	46	11
80063	SM-D-413701	47	2
80063	SM-D-413705	47	3
80063	SM-D-413709	48	28
80063	SM-D-413712	48	26
80063	SM-D-413714	48	27
80063	SM-D-413724	50	12
80063	SM-D-413729	51	2
80063	SM-D-413732	51	7
80063	SM-D-413733	51	4

FSCM	PART NUMBER	FIGURE NO.	ITEM NO.
80063	SM-D-413735	52	21
80063	SM-D-413735	54	34
80063	SM-D-413740	52	20
80063	SM-D-413740	54	33
80063	SM-D-413742	52	22
80063	SM-D-413744	52	23
80063	SM-D-413755	53	3
80063	SM-D-413756	53	4
80063	SM-D-413763	53	13
80063	SM-D-413764	53	2
80063	SM-D-413768	54	35
80063	SM-D-413770	54	36
80063	SM-D-413772	54	38
80063	SM-D-413775	54	39
80063	SM-D-413787	55	2
80063	SM-D-413792	55	3
80063	SM-D-413802	50	5
80063	SM-D-413810	57	18
80063	SM-D-413812	57	22
80063	SM-D-413816-GR1	50	7
80063	SM-D-413816-GR4	97	1
80063	SM-D-413816-GR5	29	5
80063	SM-D-413820	1	7
80063	SM-D-413829	58	6
80063	SM-D-413836	59	3
80063	SM-D-413839	59	4
80063	SM-D-413845	60	29
80063	SM-D-413851	61	4
80063	SM-D-413854	61	5
80063	SM-D-413858	62	37
80063	SM-D-413876	58	16
80063	SM-D-413878	58	27
80063	SM-D-413879	58	17
80063	SM-D-413887	64	22
80063	SM-D-413891	64	20
80063	SM-D-413892	1	25
80063	SM-D-413902	99	15
80063	SM-D-413928	1	33
80063	SM-D-413935	83	19
80063	SM-D-413949	84	65
80063	SM-D-413953	84	16
80063	SM-D-413958	84	47
80063	SM-D-413975	87	1
80063	SM-D-413977	88	1
80063	SM-D-413982	84	58
80063	SM-D-413985	86	1
80063	SM-D-413994	84	42
80063	SM-D-413999	84	43
80063	SM-D-414005	89	50
80063	SM-D-414013	89	56
80063	SM-D-414028	89	45
80063	SM-D-414043-GR1	89	34
80063	SM-D-414043-GR2	89	36
80063	SM-D-414045	84	34
80063	SM-D-414048	90	1
80063	SM-D-414050	90	16
80063	SM-D-414055	90	4
80063	SM-D-414059	90	38
80063	SM-D-414063	90	33
80063	SM-D-414077	92	27
80063	SM-D-414080	92	32
80063	SM-D-414112	1	20
80063	SM-D-414116	97	4
80063	SM-D-414122	97	10
80063	SM-D-414139	97	7
80063	SM-D-414145-2	97	18
80063	SM-D-414152	93	32
80063	SM-D-414154	93	64
80063	SM-D-414155-1	93	58
80063	SM-D-414155-2	93	63
80063	SM-D-414157	93	20
80063	SM-D-414163	93	1
80063	SM-D-414176	65	5
80063	SM-D-414178	66	3
80063	SM-D-414182	66	2
80063	SM-D-414186	67	36
80063	SM-D-414188	67	40
80063	SM-D-414203	70	3
80063	SM-D-414207	71	18
80063	SM-D-414208	71	15
80063	SM-D-414210	71	14
80063	SM-D-414212	71	13
80063	SM-D-414217	68	2
80063	SM-D-414221	68	3
80063	SM-D-414227	69	30
80063	SM-D-414231	69	23
80063	SM-D-414233	69	24
80063	SM-D-414235	69	26
80063	SM-D-414240	74	6
80063	SM-D-414244	74	5
80063	SM-D-414250	75	33
80063	SM-D-414252	75	37
80063	SM-D-414256	72	4
80063	SM-D-414273	65	10
80063	SM-D-414275	65	16
80063	SM-D-414279	76	3
80063	SM-D-414281	76	2
80063	SM-D-414288	1	32
80063	SM-D-414293	101	5
80063	SM-D-414294	101	1
80063	SM-D-414297	1	34
80063	SM-D-414299	102	1
80063	SM-D-414304	1	19
80063	SM-D-414310	77	14
80063	SM-D-414322	77	10
80063	SM-D-414325	79	3
80063	SM-D-414327	79	5
80063	SM-D-414331	77	1
80063	SM-D-414337	80	7
80063	SM-D-414343	80	15
80063	SM-D-414348	81	12
80063	SM-D-414363	103	3
80063	SM-D-414364-GR10	1	41
80063	SM-D-414364-GR11	1	44
80063	SM-D-414364-GR4	1	38
80063	SM-D-414364-GR5	1	46
80063	SM-D-414364-GR6	1	45
80063	SM-D-414364-GR7	29	1
80063	SM-D-414364-GR8	1	40
80063	SM-D-414364-GR9	1	42
80063	SM-D-414364-12	1	43
80063	SM-D-414364-13	1	39
80063	SM-D-414366	1	6
80063	SM-D-414384	2	21
80063	SM-D-414385	2	23
80063	SM-D-414396	2	25
80063	SM-D-414402	2	44
80063	SM-D-414420	29	22
80063	SM-D-414430	2	59
80063	SM-D-414442	15	36
80063	SM-D-414445	15	29
80063	SM-D-414446	15	25
80063	SM-D-414452	16	16
80063	SM-D-414454	16	8
80063	SM-D-414456	15	24
80063	SM-D-414460	17	4
80063	SM-D-414463	15	22
80063	SM-D-414465	18	2
43710	SM-D-414467	18	5
80063	SM-D-414473	18	10
80063	SM-D-414480	18	30
80063	SM-D-414496	2	10
80063	SM-D-414500	31	8
80063	SM-D-414510	32	7
80063	SM-D-414515	32	21
80063	SM-D-414524	31	19
80063	SM-D-414525	31	7
80063	SM-D-414532	33	31
80063	SM-D-414554	33	22
80063	SM-D-414562	33	76
80063	SM-D-414572	33	24
80063	SM-D-414574	33	116
80063	SM-D-414578	33	107
80063	SM-D-414581	33	74
80063	SM-D-414581-2	33	75
80063	SM-D-414586	33	111
80063	SM-D-414589	33	88
80063	SM-D-414593	33	102
80063	SM-D-414598	33	17
80063	SM-D-414600	33	91

FSCM	PART NUMBER	FIGURE NO.	ITEM NO.
80063	SM-D-414602	33	96
80063	SM-D-414604	33	5
80063	SM-D-414606	33	70
80063	SM-D-414631	31	20
80063	SM-D-414632	2	97
80063	SM-D-414638	15	15
80063	SM-D-414652	26	11
80063	SM-D-414662	26	69
80063	SM-D-414664	26	58
80063	SM-D-414670	26	51
80063	SM-D-414672	26	77
80063	SM-D-414673	26	78
80063	SM-D-414701	26	6
80063	SM-D-414717	26	23
80063	SM-D-414741	2	70
80063	SM-D-414743	27	24
80063	SM-D-414744	27	9
80063	SM-D-414749	27	21
80063	SM-D-414754	27	25
80063	SM-D-414778	25	12
80063	SM-D-414798	2	108
80063	SM-D-414799	2	107
80063	SM-D-414800	2	106
80063	SM-D-414814	27	16
80063	SM-D-416322	9	2
80063	SM-D-416331	9	29
80063	SM-D-416335	20	5
80063	SM-D-416342	2	54
80063	SM-D-416343	20	1
80063	SM-D-416345	2	60
80063	SM-D-416346	10	3
80063	SM-D-416370	3	6
80063	SM-D-416371	5	21
80063	SM-D-416378	6	22
80063	SM-D-416395	23	31
80063	SM-D-439953	84	46
80063	SM-D-439955	84	79
80063	SM-D-439956	1	15
80063	SM-D-439959	80	6
80063	SM-D-921300	50	4
80063	SM-E-413534	49	12
80063	SM-E-413545	49	18
80063	SM-E-413971	84	32
80063	SM-E-413998	85	14
80063	SM-E-414135	93	43
80063	SM-E-414137	96	1
80063	SM-E-414165	94	14
80063	SM-E-414283	76	14
80063	SM-E-414411	2	43
80063	SM-E-414413	29	1
80063	SM-E-414706	26	4
97954	SMI7MDM70	27	12
95238	SM11-20P-GD	25	4
95238	SM11-20S-GD	2	53
95238	SM34-20P-GD	26	5
95238	SM34-20SGDF	29	33
95238	SM7-20S-GD	29	28
29372	SPA0440S	85	8
83086	SR168PPK25-7	33	1
81349	SR20F3682HG0	2	33
37695	S413981-1	29	9
37695	S413981-1	87	2
37695	S413981-3	29	10
37695	S413981-3	87	6
37695	S413981-4	29	3
37695	S413981-5	29	2
37695	S413981-5	87	5
02615	S4581	33	34
40920	S614FCHHEL0-1	14	17
40920	S614FCHHEL0-1	22	15
40920	S614FCHHEL0-1	91	8
83512	S7847	84	40
83512	S7892	2	5
09205	T-2376	23	19
87216	T-2377	8	15
81349	TS103U02	90	31
98978	T6-126000JH	90	35
98978	T6-226020JH	90	34
81349	U-291/U	29	32
05574	V88/1PALL-42	95	4

FSCM	PART NUMBER	FIGURE NO.	ITEM NO.
05574	VCS31/1A25	97	8
16352	VVC354	67	2
95275	V143-066B22T102K	89	24
71590	YKF007-01L0P	65	7
76385	Z2287-RC	9	28
05574	000201-1401	26	33
05574	000300-0315	26	36
05574	000300-0315	58	14
05574	000300-0316	78	13
05574	000300-0319	95	2
05574	000300-0319	97	3
05574	000400-0027	97	12
05574	000401-0013	29	17
05574	000401-0015	29	37
05574	00041-0014	58	18
98291	011-2025-00-0-479	95	1
05574	019-0039-000	97	21
05574	019-0060-000	97	22
71468	051380-0000	77	22
71468	051380-0000	88	6
71468	053744-0000	97	23
43710	0617-A-2922	57	6
18796	0801011X5F0 102K	5	7
18796	0801011X5F0 102K	6	9
18796	0801011X5F0 102K	8	9
18796	0801011X5F0 102K	12	10
18796	0801011X5F0 102K	23	3
18796	0801011X5F0 102K	24	3
73957	08656-18	26	99
73957	08656-18	85	6
73957	08656-18	98	9
73957	08656-18	101	10
14936	1N3477A	62	2
70779	1N3477A	75	3
80131	1N3550	6	1
80131	1N3550	7	1
80131	1N3550	9	14
16352	1N3551	23	1
80131	1N3552	8	1
03877	1N3559	38	1
03877	1N3564	54	2
03877	1N3565	93	48
99378	100-200-2-4	12	20
01801	100-225-1-2	71	20
01801	100-225-9-14	79	7
01801	101-345	8	35
06560	10100-171	8	14
97469	10102-125	5	10
97469	10102-125	6	12
07700	10115	84	78
07000	10115-0.0531	84	76
07000	10115-4.250	84	77
97469	10128-45	23	14
80740	1018-112-011	2	66
70485	1070	30	8
91929	11SM3	26	49
91929	11SM3	33	41
18359	1322-3	33	44
18359	1322-4	26	31
77147	14123-A	77	7
02660	143-837-01	12	12
02660	143-837-02	12	9
02660	143-837-03	12	11
02660	143-837-04	12	17
02660	143-837-05	12	13
02660	143-837-06	12	15
76854	193581-A1	29	40
37695	2N2426	27	37
56289	20C201	60	7
56289	20C201	62	6
88245	2020B	16	3
13327	2106103	93	57
30655	22NCFMA1-26	53	11
30655	22NCFMA1-40	25	9
30655	22NCFMA1-40	53	12
30655	22NCFMA1-40	84	80
30655	22NCFMA1-40	92	35
30655	22NCFMA2-26	90	21
30655	22NCFMA2-26	92	34
30655	22NCFMA2-40	2	116

FSCM	PART NUMBER	FIGURE NO.	ITEM NO.
30655	22NCFMA2-40	81	13
30655	22NCFMA2-40	82	6
30655	22NCFMA2-40	90	20
72962	22NC3-62	33	93
72962	22NC3-62	85	10
30655	22NC6-40	27	30
32997	220W-1-102	56	10
32997	220W-1-201	24	34
32997	220W-1-203	62	27
32997	220W-1-502	48	18
32997	220W-1-502	94	14
70485	230	97	17
50056	25TD24	60	13
50056	25TD24	94	8
02660	27-3	4	6
02660	27-3	7	6
02660	27-3	8	11
02660	27-3	12	5
02660	27-3	23	13
02660	27-3	24	9
02660	27-3	40	6
02660	27-3	48	9
02660	27-3	92	10
74868	27-32-1001	89	35
72982	2929-000-432K	84	52
60641	3/16-2NA	77	12
18915	3A-3	5	24
18915	3A-3	6	26
18915	3A-3	7	28
72982	301-000C0J0-2298	5	3
72982	301-000C0J0-2298	6	4
72982	301-011-P3K0-309C	4	2
72982	301-011-P3K0-409C	4	3
72982	301-011C0K0109B	5	4
72982	301-011C0K0109B	6	5
72982	301-011P3K0259B	23	9
72982	301-011S3B0-209C	5	2
72982	301-011S3B0-209C	6	3
72982	301-011T2H130G	5	5
72982	301-011T2H130G	6	7
72982	301-011U2J0309B	8	3
72982	301655P2G0170G	23	6
72982	302-012S3B0109C	7	5
50056	31TD29	60	12
50056	31TD29	62	14
50056	32TD57	46	13
71279	3226-3	4	17
71279	3226-3	5	22
71279	3226-3	6	23
71279	3226-3	7	22
71279	3226-3	8	32
71279	3226-3	23	41
71279	3226-3	24	38
65092	341124	2	91
78189	3502-10-55	81	10
78189	3502-10-55	82	7
71279	3653-2-01	4	24
71279	3653-2-01	5	30
71279	3653-2-01	6	32
71279	3653-2-01	23	37
71279	3653-2-01	24	33
42498	38531-3	77	24
88447	38871-G-2	9	12
88447	38871-G-2	34	18
88447	38871-G-2	50	15
88447	38871-G-2	58	26
88447	38871-G-2	65	13
88447	38881-L	9	9
88447	38881-L	34	20
88447	38881-L	50	17
88447	38881-L	58	23
88447	38881-L	65	12
88447	38891-W	9	11
88447	38891-W	34	19
88447	38891-W	50	16
88447	38891-W	58	24
88447	38891-W	65	15
88447	38901-R	9	10
88447	38901-R	34	21
88447	38901-R	50	18
88447	38901-R	58	25
88447	38901-R	65	14
53399	4JX1C1607	56	6
53399	4JX1C16J7	62	12
12615	40-144-19 YEL	90	40
82402	400425	89	22
96214	410894-38	2	28
05844	412S	83	2
00779	42263-2	26	8
00779	42263-2	97	5
83486	43-04-04120CD PL	15	32
83486	43-04-04120CD PL	35	5
83486	43-04-04120CD PL	37	5
83486	43-04-04120CD PL	39	5
83486	43-04-04120CD PL	41	5
83486	43-04-04120CD PL	43	5
83486	43-04-04120CD PL	45	5
83486	43-04-04120CD PL	47	5
83486	43-04-04120CD PL	49	1
83486	43-04-04120CD PL	51	5
83486	43-04-04120CD PL	55	5
83486	43-04-04120CD PL	64	3
83486	43-04-04120CD PL	66	6
83486	43-04-04120CD PL	68	6
83486	43-04-04120CD PL	70	6
83486	43-04-04120CD PL	74	2
83486	43-04-04120CD PL	76	12
83486	43-04-04120NI PL	53	9
83486	43-04-04120NI PL	57	1
97315	4468	75	13
03615	45011	84	20
56289	451E3915	78	10
70528	4535-046	57	21
70528	4535-060	16	2
70528	4535-060	62	38
70528	4535-060	67	37
70528	4535-060	69	32
70528	4535-060	70	5
70528	4535-060	71	22
70528	4535-060	73	35
70528	4535-060	79	11
49956	481660-1	29	25
93292	500-1010	9	17
93292	500-1011	9	23
84048	5000-6141	26	63
05009	5023	16	17
05009	5023	17	2
05009	51-311-3196	29	38
05009	51-311-3196	29	39
05009	51-311-3196	50	19
05009	51-311-3196	97	20
79136	5100-15-C	31	17
79136	5100-15-C	99	4
79136	5103-18-H	33	2
79136	5103-18-H	86	8
79136	5103-18-H	89	13
79136	5103-18-H	99	12
79136	5103-21-H	26	18
79136	5103-25-H	18	22
79136	5103-25-H	33	104
79136	5103-25-H	90	17
79136	5103-31-H	33	113
79136	5103-50-W	33	60
79136	5103-50H	89	7
79136	5133-12	57	5
79136	5133-12	84	44
79136	5133-15	1	27
79136	5555G-7	72	3
78189	61-040441-40-4702-4802	9	6
78189	61-040441-40-4702-4802	10	5
78189	61-040441-40-4702-4802	20	10
05106	67A176	1	8
95238	683-2GD	77	16
95238	683-2GD	97	26
05869	719299-197	62	28
77820	72-344092-10P	2	14
98278	754	18	28
72982	801-000X5F0-102K	75	6
72982	801-000X5F0-102K	88	2
72982	801-000X5F0-102K	92	5

FSCM	PART NUMBER	FIGURE NO.	ITEM NO.
80045	805091-2	93	62
80045	806141	93	28
80045	812020	58	3
80045	812029	58	7
80393	813064-6	89	14
80045	813323	25	20
80045	816065	73	22
92208	819A-1	50	1
80045	831124-3	26	32
80045	831124-6	78	14
50763	831161	75	32
92208	847A-1	50	3
72982	855-027-X5T0472M	7	2
72982	855-027-X5T0472M	10	21
72982	855-027-X5T0472M	12	18
72982	855-027-X5T0472M	24	1
18796	855-222X5S0-103M	16	6
18796	855-222X5S0-103M	17	6
18796	855-222X5S0-103M	36	4
18796	855-222X5S0-103M	42	1
18796	855-222X5S0-103M	44	2
18796	855-222X5S0-103M	46	4
18796	855-222X5S0-103M	48	8
18796	855-222X5S0-103M	52	1
18796	855-222X5S0-103M	54	5
18796	855-222X5S0-103M	60	8
18796	855-222X5S0-103M	62	5
18796	855-222X5S0-103M	71	2
18796	855-222X5S0-103M	94	4
72982	855-511X5S0332M	40	1
72982	855-511X5S0332M	69	3
78584	921016	29	16
04221	95-3336	34	8
04221	95-3559	58	5
72962	96NM107-62	2	42
72962	96NM107-62	77	29
72825	9799-73	92	23

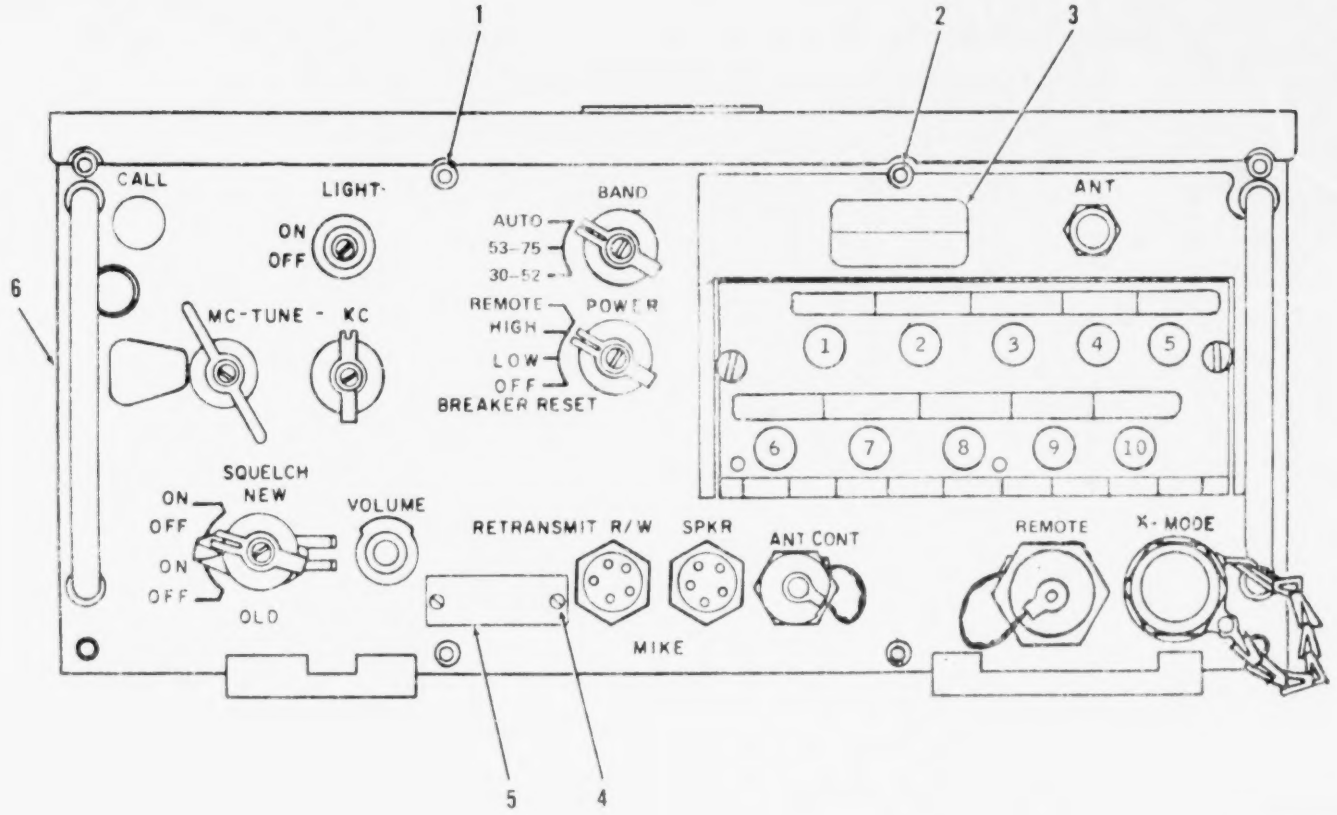

Figure 104. Receiver-Transmitters, Radio RT-246/VRC and RT-246A/VRC (Sheet 1 of 4).

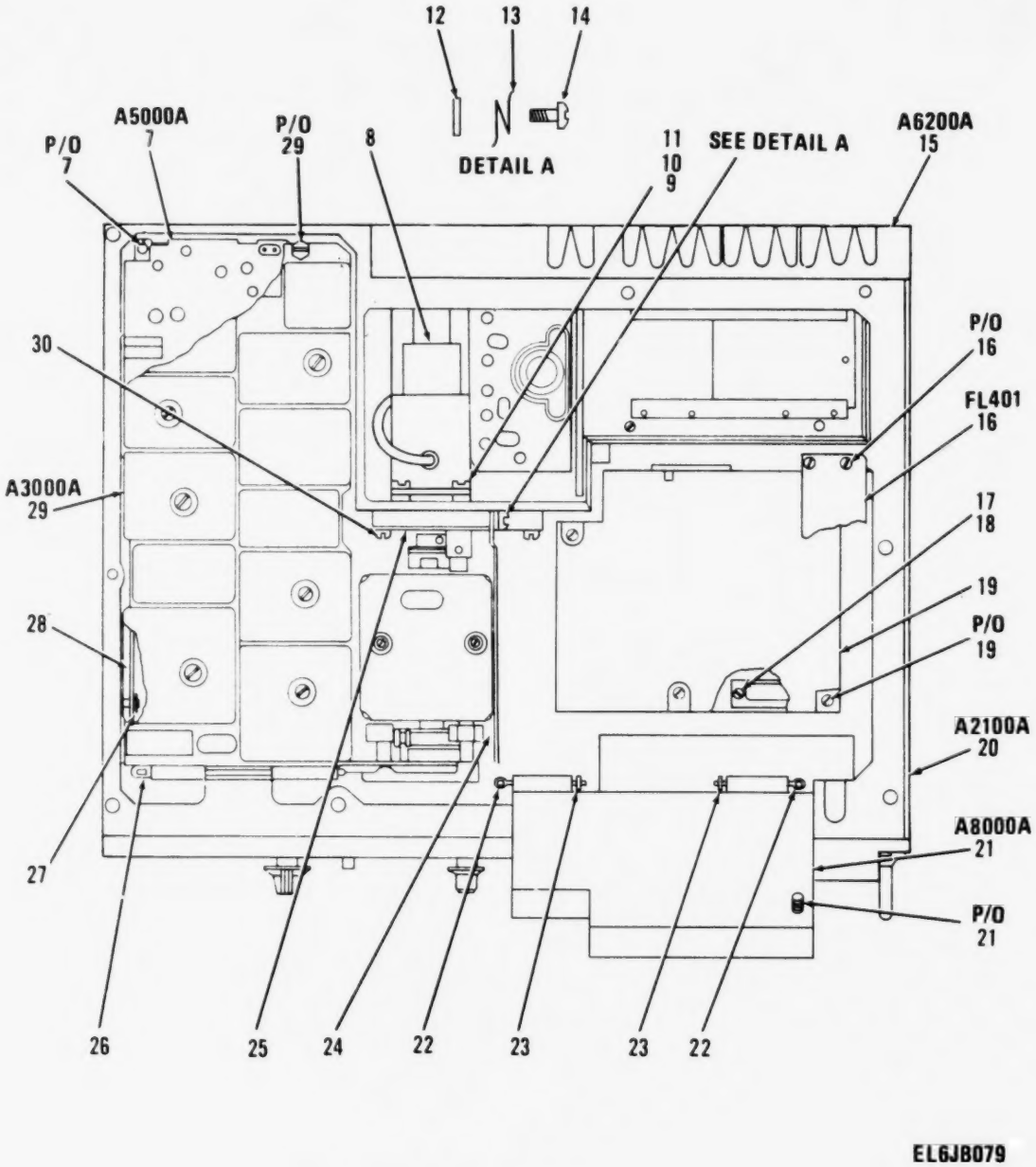

Figure 104. Receiver-Transmitters, Radio RT-246/VRC and RT-246A/VRC (Sheet 2 of 4).

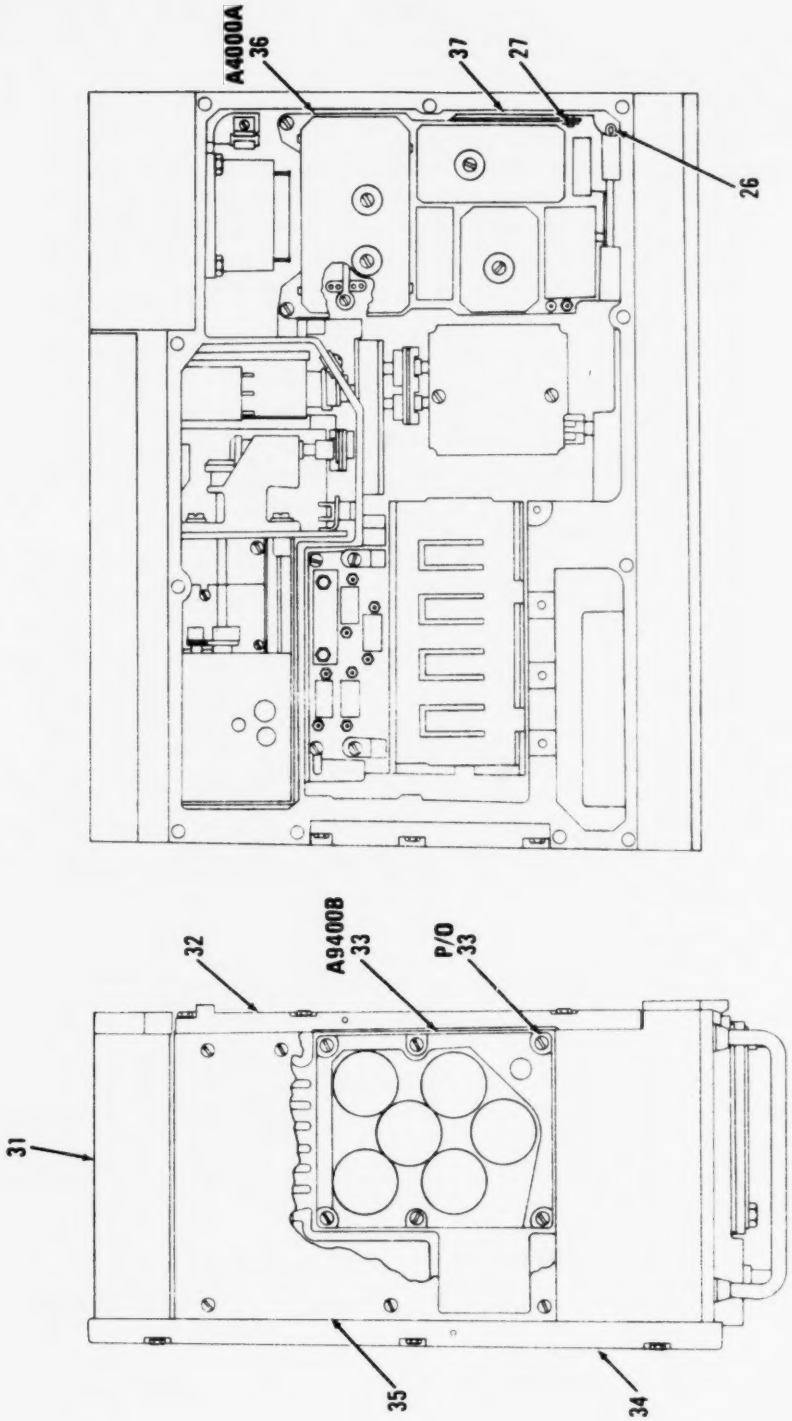

Figure 104. Receiver-Transmitters, Radio RT-246/VRC and RT-246A/VRC (Sheet 3 of 4).

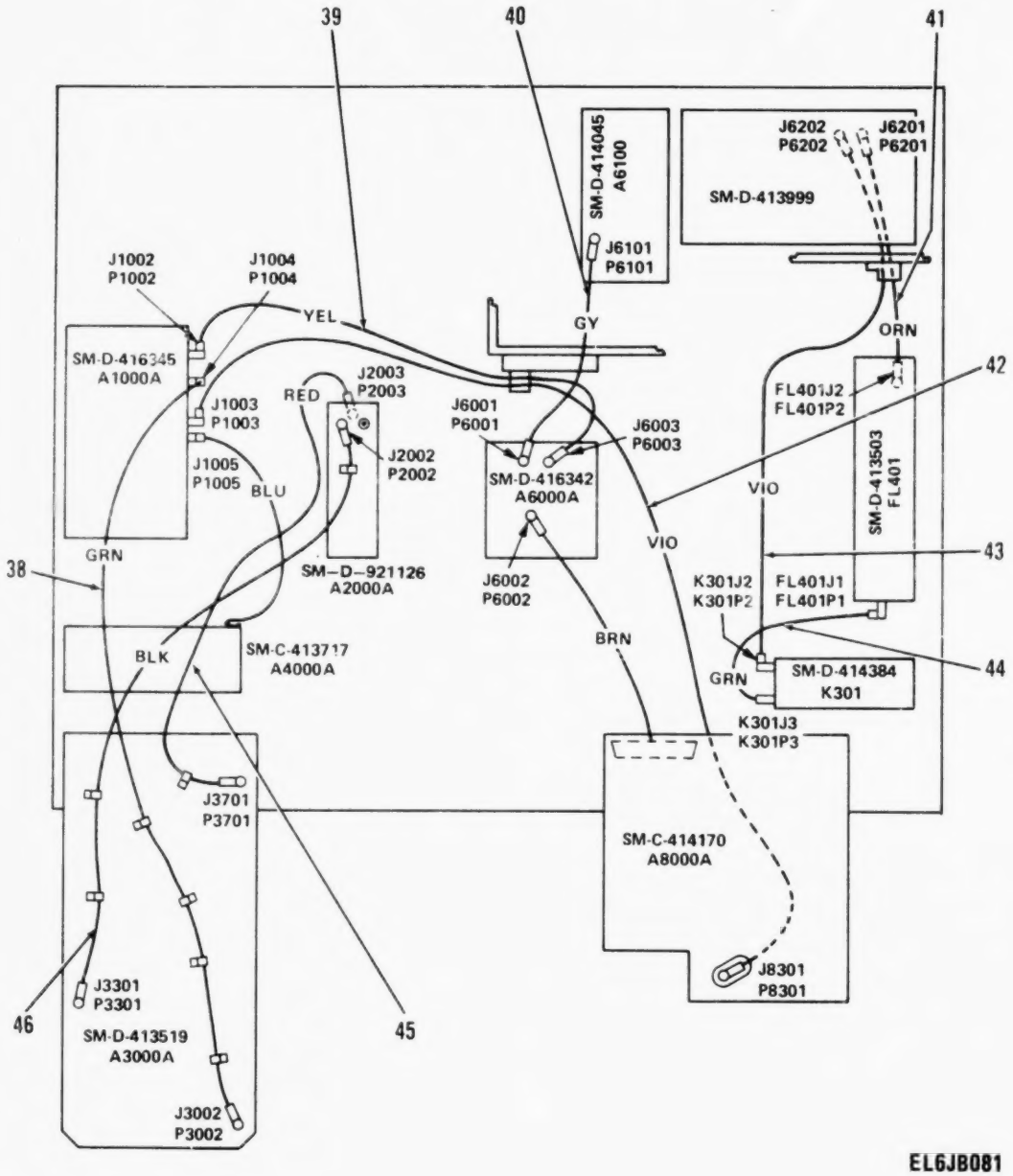

Figure 104. Receiver-Transmitters, Radio RT-246/VRC and RT-246A/VRC (Sheet 4 of 4).

(1) ILLUSTRATION (a) FIG NO	(1) ILLUSTRATION (b) ITEM NO	(2) SMR CODE	(3) NATIONAL STOCK NUMBER	(4) FSCM	(5) PART NUMBER	(6) DESCRIPTION USABLE ON CODE	(7) U/M	(8) QTY INC IN UNIT
						GROUP 01 RECEIVER-TRANSMITTERS,RADIO RT-246/VRC AND RT-246A/VRC SM-D-413501 DL-SM-B-413500		
104	1	PAFZZ	5305-00-137-7924	80063	SM-B-413508-3	SCREW,CAP,SOCKET	EA	7
104	2	PAFZZ	5305-00-151-6202	80063	SM-B-413508-4	SCREW,CAP,SOCKET	EA	1
104	3	PAOZZ	7690-01-125-1398	80063	SM-C-921086	LABEL,CAUTION	EA	1
104	4	PAFZZ	5305-00-253-5609	96906	MS21318-13	SCREW,DRIVE	EA	2
104	5	XBFZZ		80063	SM-C-481751	PLATE,IDENT	EA	1
104	6	ADDDD		80063	SM-D-414366	CONTROL ASSY	EA	1
104	7	PAFDD	5820-00-457-0569	80063	SM-D-413820	AMPLIFIER ASSEMBLY	EA	1
104	8	PAFFF	5820-00-884-2456	80063	SM-D-413514	CONTROL,FREQUENCY S	EA	1
104	9	PAFZZ	5340-00-873-2215	80063	SM-B-413515	CLAMP,RIM CLENCHING	EA	4
104	10	PAFZZ	5305-00-543-2396	96906	MS35265-27	SCREW,MACHINE	EA	4
104	11	PAFZZ	5310-00-045-4007	96906	MS35338-41	WASHER,LOCK	EA	4
104	12	PAFZZ	5310-00-951-4679	96906	MS27183-3	WASHER,FLAT	EA	1
104	13	PAFZZ	5360-00-884-2473	80063	SM-C-413513	SPRING,HELICAL,TORS	EA	1
104	14	PAFZZ	5305-00-823-5833	80063	SM-C-413511	SCREW,SHOULDER	EA	1
104	15	PAFDD	5820-00-457-0575	80063	SM-D-439956	AMPLIFIER,RADIO FRE	EA	1
104	16	PAFZZ	5915-00-892-3013	80045	834020	FILTER,LOW PASS LOW PASS LC VSWR 1.3 TO 1.30 TO 53MHZ FREQ 65 WATT	EA	1
104	17	PAFZZ	5305-00-054-5637	96906	MS51957-3	SCREW,MACHINE	EA	2
104	18	PAFZZ	5310-00-543-5060	96906	MS35338-39	WASHER,LOCK	EA	2
104	19	PAFDD	5820-01-092-8067	80063	SM-D-921504	POWER SUPPLY ASSEMB	EA	1
104	20	XADDD		80063	SM-D-414112	VOLTAGE REG ASSY	EA	1
104	21	PAFDD		80063	SM-C-414170	AMPL-MOD ASSY	EA	1
104	22	PAFZZ	5315-00-823-8764	80063	SM-B-413512	PIN,STRAIGHT,HEADED	EA	2
104	23	PAFZZ	5365-00-988-2387	80063	SM-B-413516	RING,RETAINING	EA	2
104	24	PAFZZ	5820-00-884-2472	80063	SM-B-413510	ARM,LATCH	EA	1
104	25	PAHDL	3020-00-369-9159	80063	SM-D-413892	GEAR SET ASSEMBLY	EA	1
104	26	PAFZZ	5315-00-858-6642	80063	SM-B-413506	PIN,STRAIGHT,HEADED	EA	1
104	27	PAFZZ	5365-00-285-6688	79136	5133-15	RING,RETAINING	EA	1
104	28	PAFZZ	5820-00-858-6464	80063	SM-C-413504-1	ARM,SLIDE	EA	1
104	29	AFFDD		80063	SM-D-413519	XTAL REF SYS ASSY	EA	1
104	30	PAHZZ	5305-00-984-4989	96906	MS35206-229	SCREW,MACHINE	EA	4
104	31	XBDZZ		80063	SM-C-414361	COVER ASSY	EA	1
104	32	PAOFF	5820-01-077-4505	80063	SM-D-414288	COVER ASSEMBLIES	EA	1
104	33	PAFHH	5820-01-092-7956	80063	SM-D-921530	CIRCUIT CARD ASSEMB	EA	1
104	34	XAOHH		80063	SM-D-414297	COVER,ASSEMBLY	EA	1
104	35	ADDZZ		80063	SM-C-414284	COVER ASSY	EA	1
104	36	PAFHH	5820-00-491-5256	80063	SM-C-413717	AMPLIFIER ASSEMBLY	EA	1

(1) ILLUSTRATION (a) FIG NO	(1) ILLUSTRATION (b) ITEM NO	(2) SMR CODE	(3) NATIONAL STOCK NUMBER	(4) FSCM	(5) PART NUMBER	(6) DESCRIPTION USABLE ON CODE	(7) U/M	(8) QTY INC IN UNIT
104	37	PAFZZ	5820-00-858-6464	80063	SM-C-413504-2	ARM,SLIDE	EA	1
104	38	PAFZA	5995-00-853-6775	80063	SM-D-414364-GR4	CABLE ASSEMBLY,RADI	EA	1
104	39	PAFZA	5995-00-823-2599	80063	SM-D-414364-GR13	CABLE ASSEMBLY,RADI	EA	1
104	40	PAFZA	5995-00-823-2934	80063	SM-D-414364-GR8	CABLE ASSEMBLY,RADI	EA	1
104	41	PAFZA	5995-00-823-2600	80063	SM-D-414364-GR10	CABLE ASSEMBLY,RADI	EA	1
104	42	PAFZA	5995-00-823-2603	80063	SM-D-414364-GR9	CABLE ASSEMBLY,RADI	EA	1
104	43	PAFZA	5995-00-823-2602	80063	SM-D-414364-GR12	CABLE ASSEMBLY,RADI	EA	1
104	44	PAFZA	5995-00-823-2608	80063	SM-D-414364-GR11	CABLE ASSEMBLY,RADI	EA	1
104	45	PAFZA	5995-00-823-2937	80063	SM-D-414364-GR6	CABLE ASSEMBLY,RADI	EA	1
104	46	PAFZA	5995-00-823-2935	80063	SM-D-414364-GR5	CABLE ASSEMBLY,RADI	EA	1

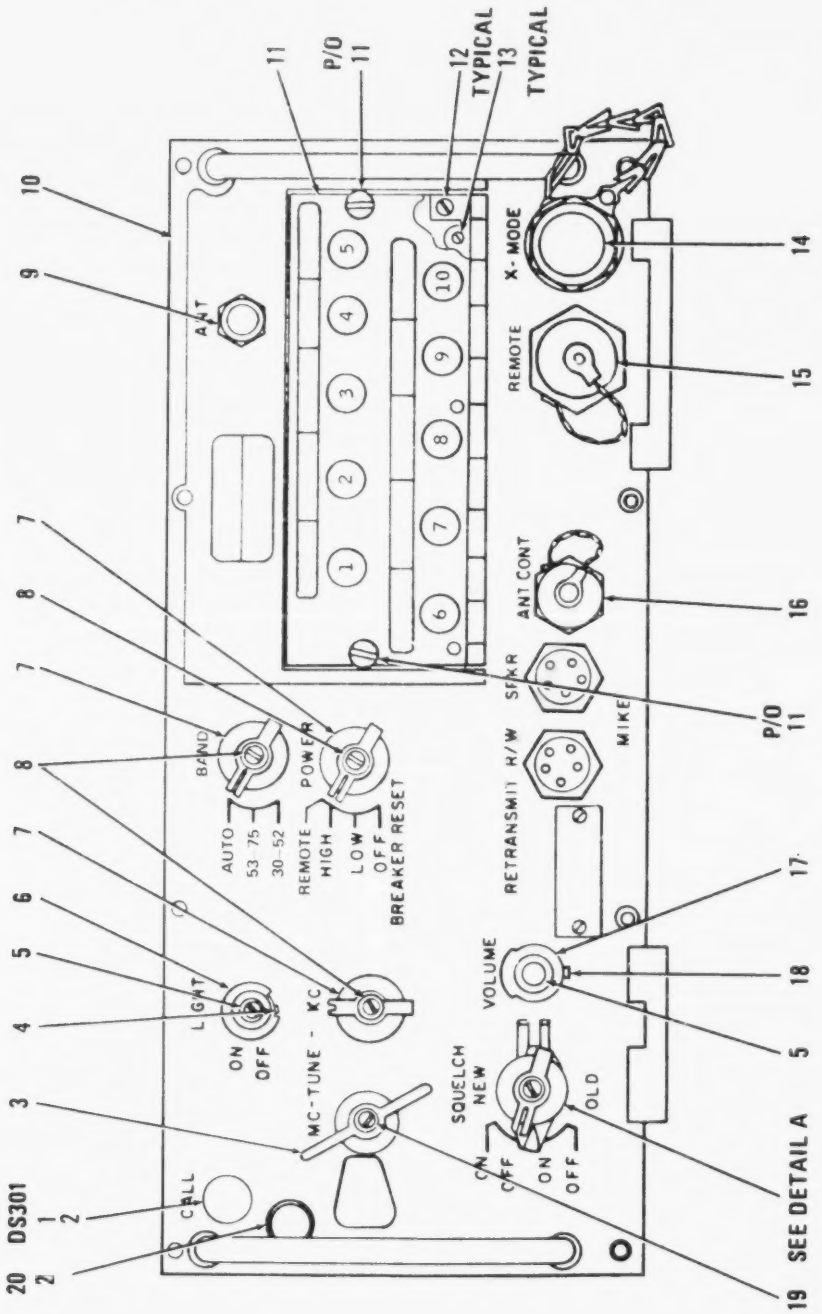

Figure 105. Control Assembly, Front Panel (Sheet 1 of 7).

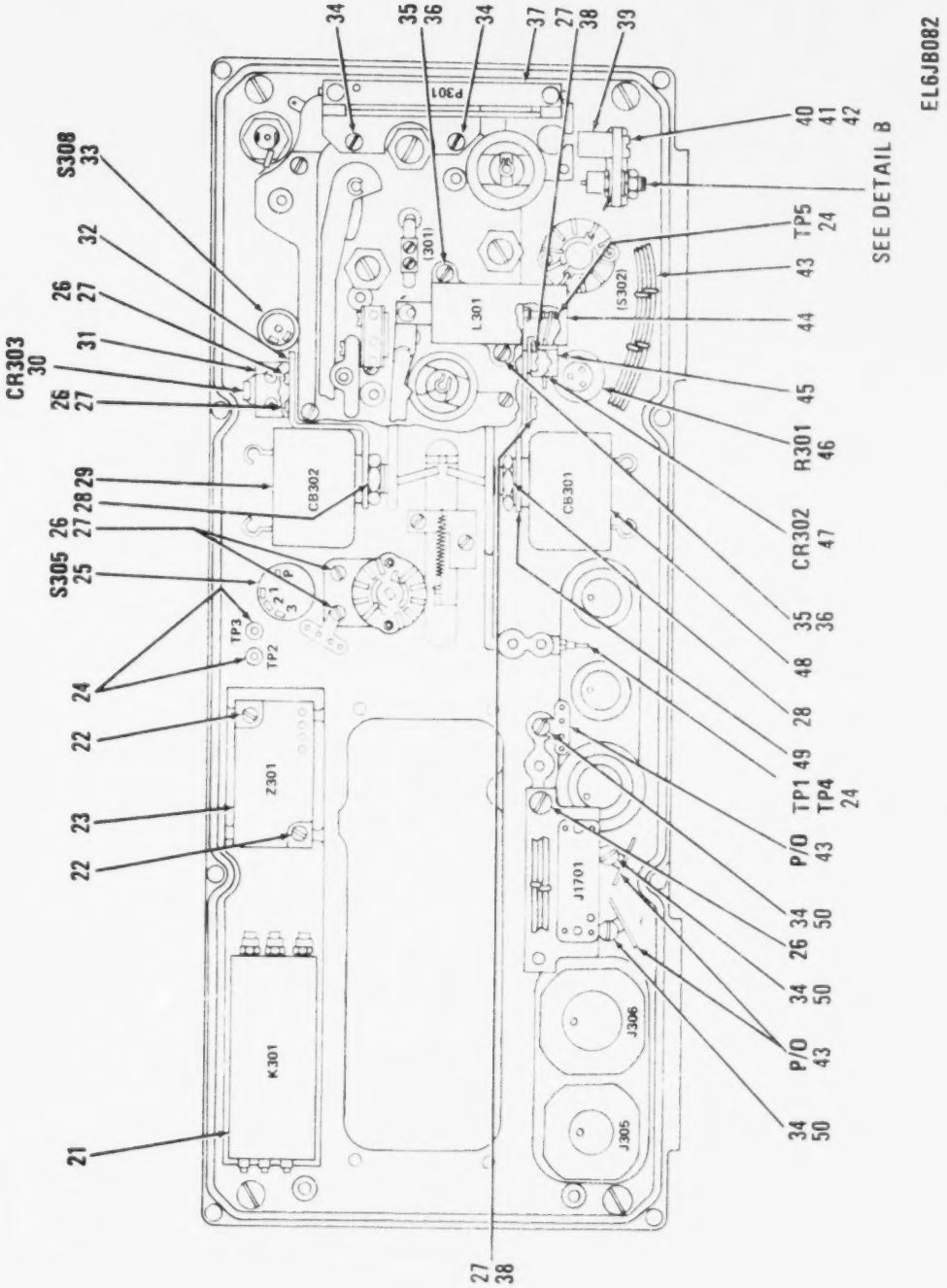

Figure 105. Control Assembly, Front Panel (Sheet 2 of 7).

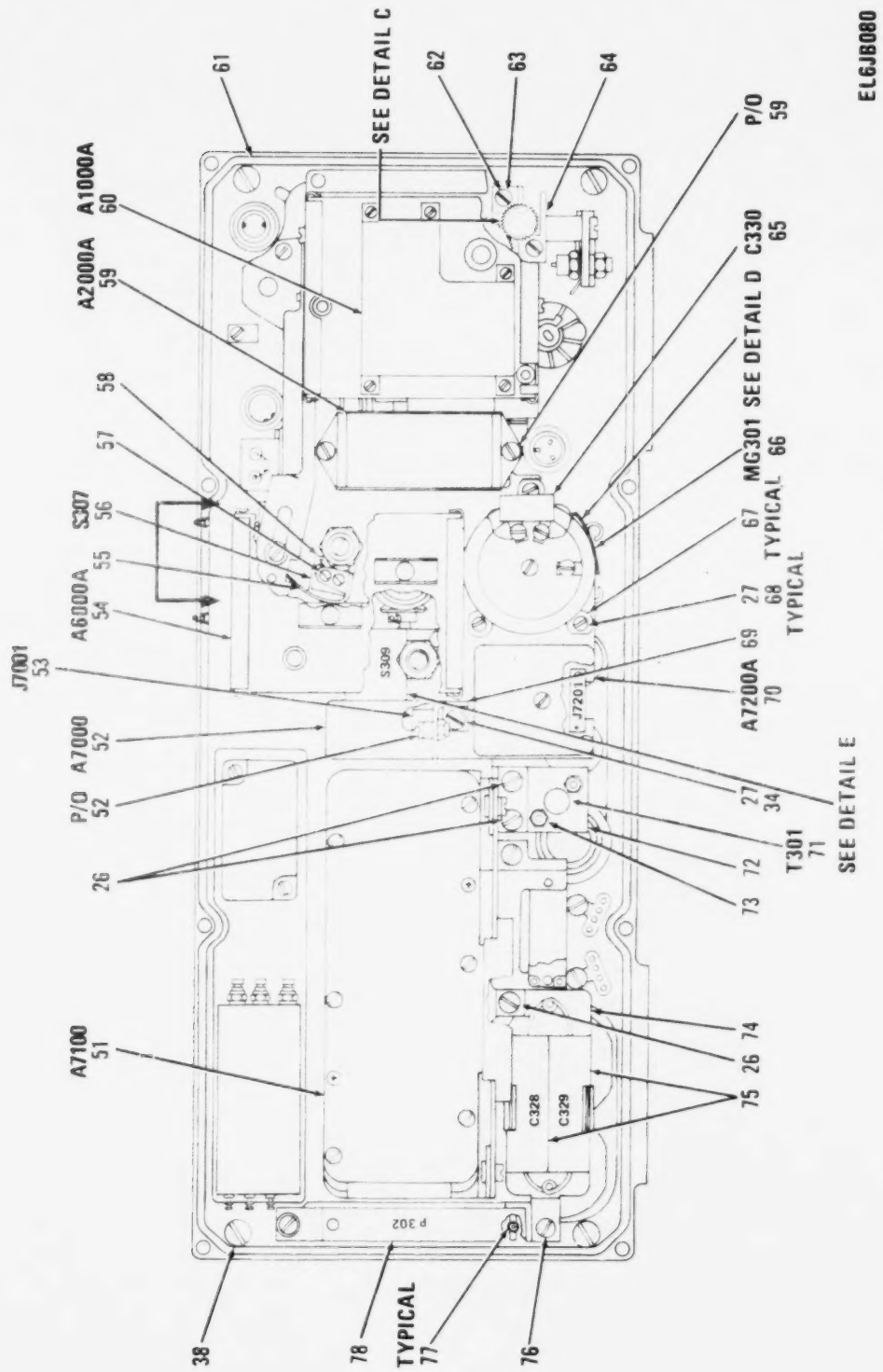

Figure 105. Control Assembly, Front Panel (Sheet 3 of 7).

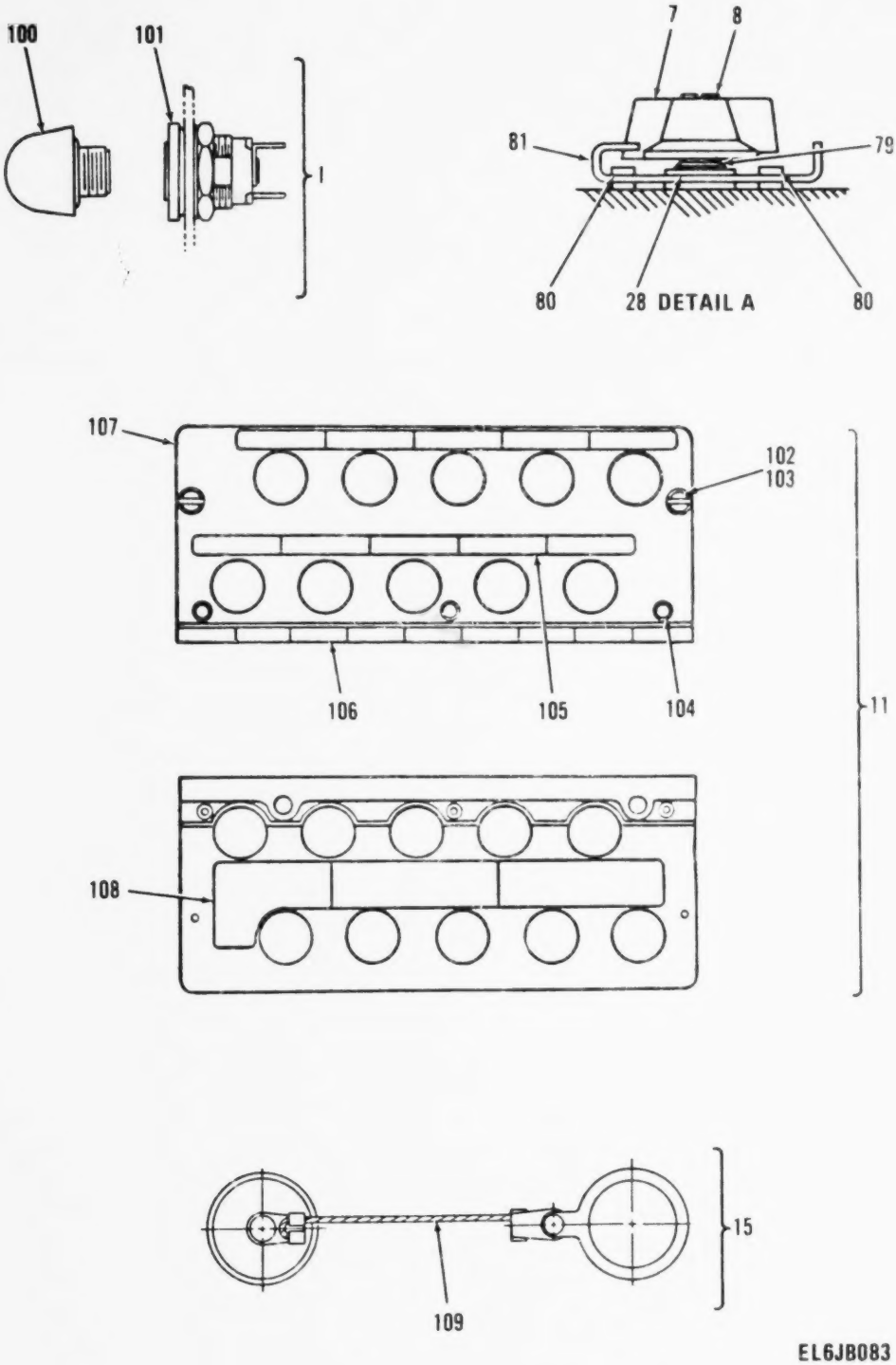

Figure 105. Control Assembly, Front Panel (Sheet 4 of 7).

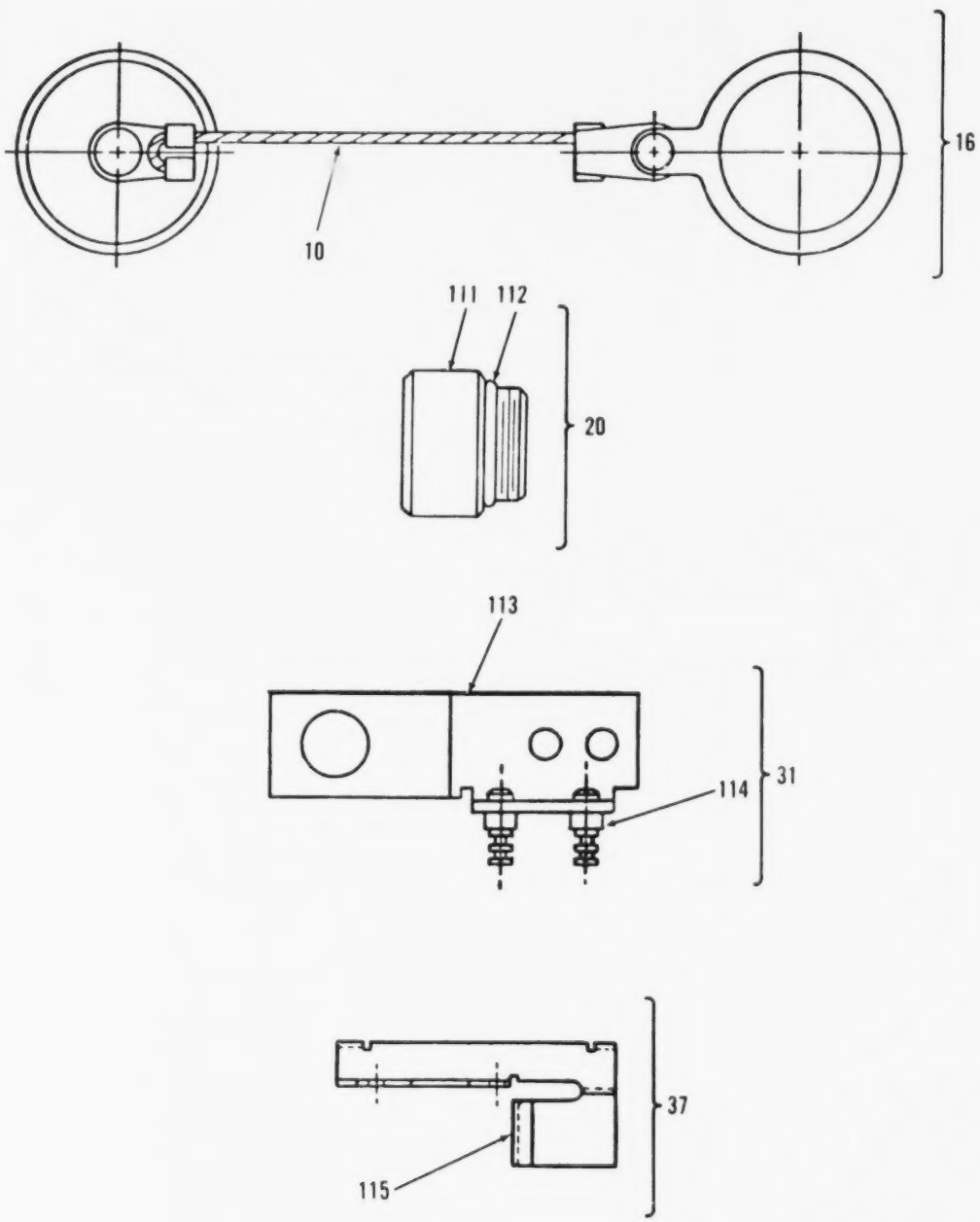

Figure 105. Control Assembly, Front Panel (Sheet 5 of 7).

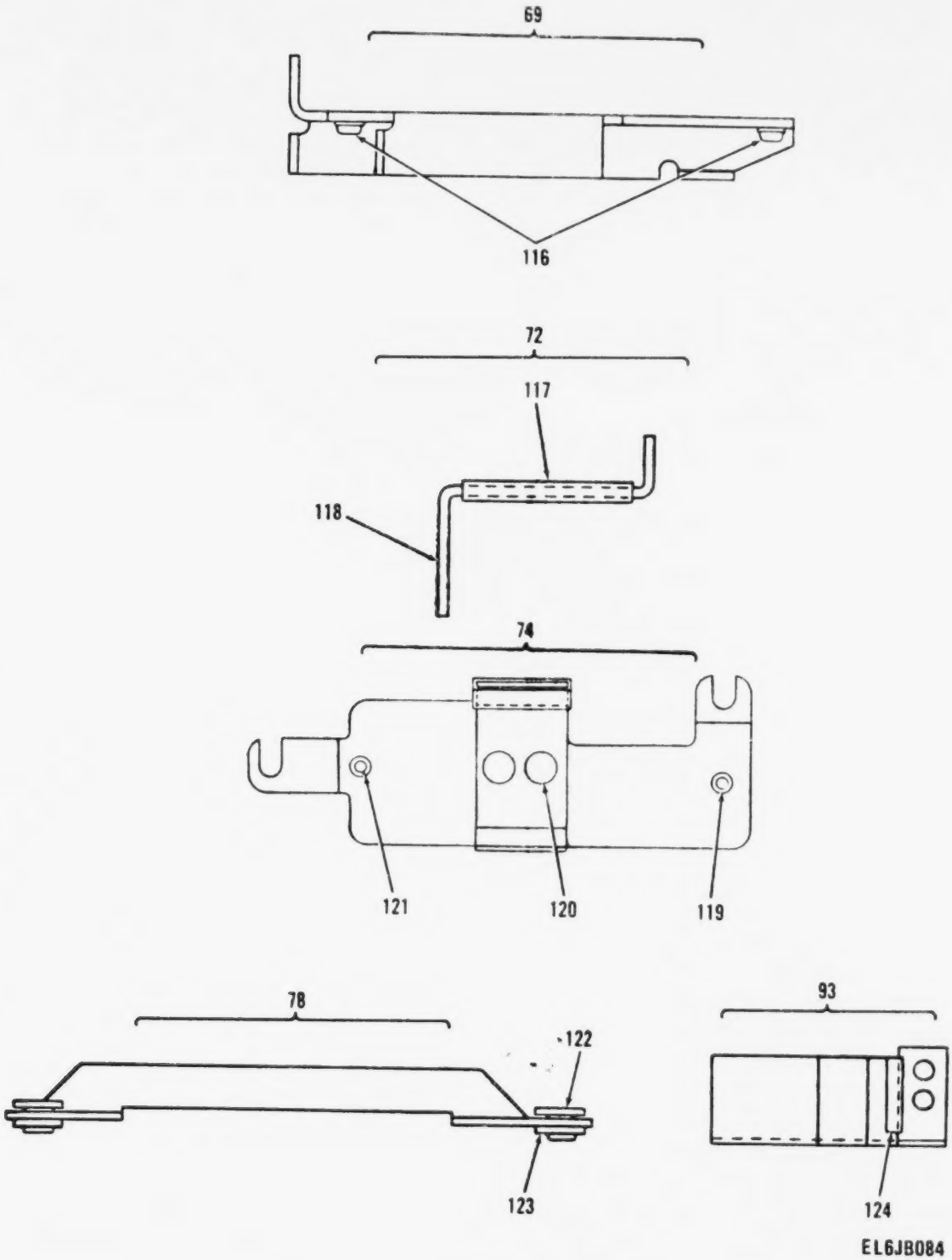

Figure 105. Control Assembly, Front Panel (Sheet 6 of 7).

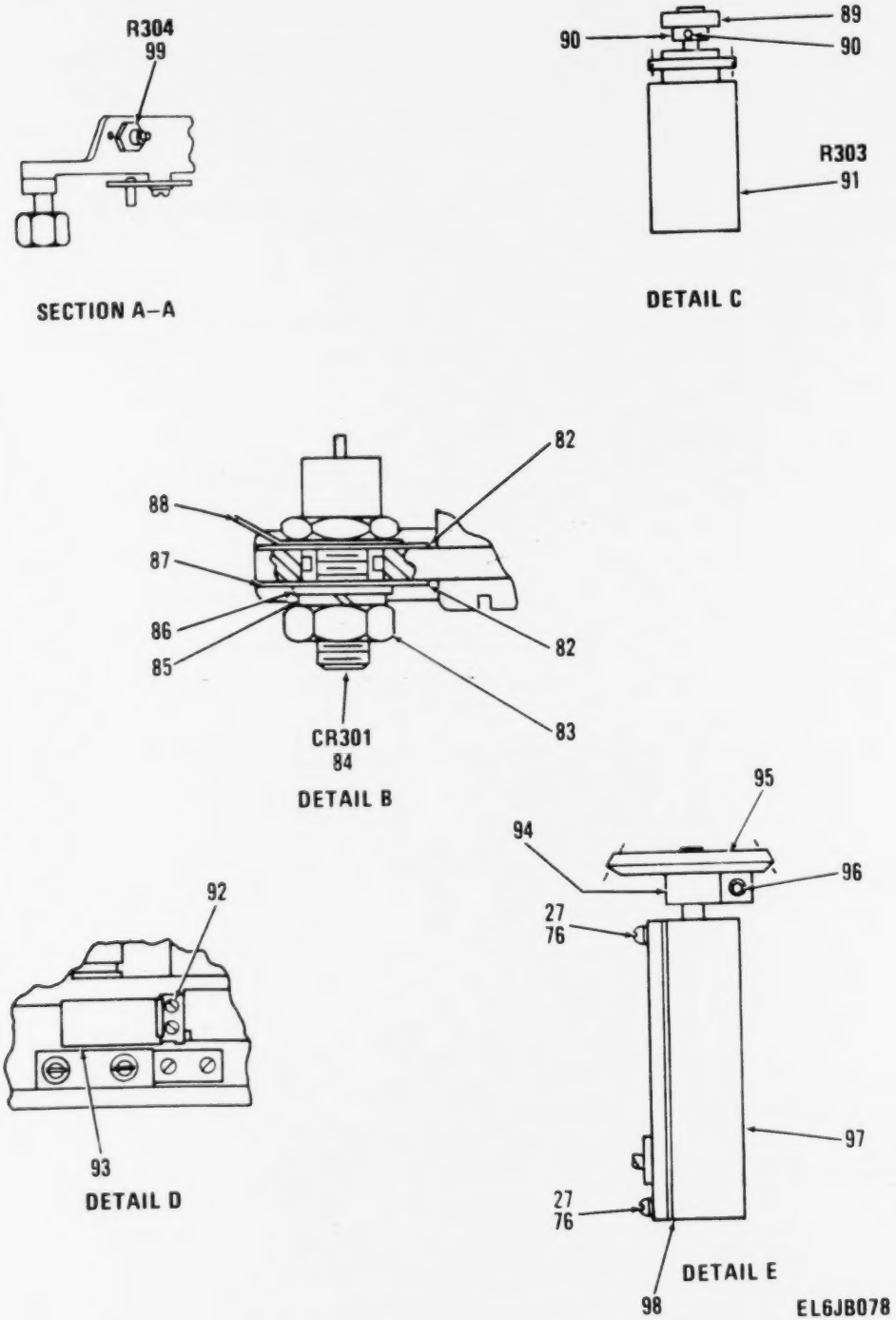

Figure 105. Control Assembly, Front Panel (Sheet 7 of 7).

(1) ILLUSTRATION (a) FIG NO	(1) ILLUSTRATION (b) ITEM NO	(2) SMR CODE	(3) NATIONAL STOCK NUMBER	(4) FSCM	(5) PART NUMBER	(6) DESCRIPTION USABLE ON CODE	(7) U/M	(8) QTY INC IN UNIT
						GROUP 0101 CONTROL ASSY (FRONT PANEL		
						GROUP A300 SM-D-414366		
105	1	PAFZZ	6210-00-435-4780	80063	SM-C-374827-1	LIGHT,INDICATOR	EA	1
105	2	PAOZZ	6240-00-155-7836	96906	MS25237-327	LAMP,INCANDESCENT	EA	2
105	3	PAOZZ	5355-00-059-9188	80063	SM-C-414401	KNOB	EA	1
105	4	PAFZZ	5310-00-158-5131	80063	SM-B-414394	WASHER,KEY	EA	1
105	5	PAOZZ	5310-00-853-9676	83512	S7892	NUT,SLEEVE	EA	1
105	6	PAOZZ	5355-00-853-6353	80063	SM-C-414393	KNOB	EA	1
105	7	PAOZZ	5355-00-616-9659	96906	MS91525-1	KNOB	EA	5
105	8	PAOZZ	5305-01-133-0155	03038	LP35223-27	SCREW,SLFLKG	EA	4
105	9	PAFZZ	5935-00-760-3219	80063	SM-C-374877	NUT,BUSHING RETAINE	EA	1
105	10	ADDDD		80063	SM-D-414496	PNL-HSG ASSY	EA	1
105	11	AHHHH		80063	SM-C-414793	DOOR ASSY	EA	1
105	12	PAFZZ	5305-00-889-3001	96906	MS35206-231	SCREW,MACHINE	EA	4
105	13	PAFZZ	5305-00-957-6265	96906	MS35190-234	SCREW,MACHINE	EA	2
105	14	PAFFF	5935-00-823-0765	77820	72-344092-10P	DUMMY CONNECTOR,PLU 10 PIN TYPE CONTACTS	EA	1
105	15	PAOZZ	5935-00-990-5580	96906	MS3181-14N	COVER,ELECTRICAL CO	EA	1
105	16	PAFFF	5935-00-823-0752	80063	SM-C-414381	COVER,ELECTRICAL CO	EA	1
105	17	PAOZZ	5355-00-853-6384	80063	SM-C-414399	KNOB	EA	1
105	18	PAFZZ	5310-00-158-5130	80063	SM-B-414400	WASHER,KEY	EA	1
105	19	PAOZZ	5305-01-126-7312	03038	LP35223-29	SCREW,SLFLKG	EA	1
105	20	PAOZZ	5820-00-859-2585	80063	SM-B-414407	CAP	EA	1
105	21	PAFZZ	5985-00-892-3200	80063	SM-D-414384	SWITCH,RADIO FREQUE 30 TO 76 MHZ OPR FREQ 18 TO 30 VDC,175 MILLIA OPR CUR	EA	1
105	22	PAFZZ	5305-00-984-4978	96906	MS35206-221	SCREW,MACHINE	EA	2
105	23	PAFZZ	5915-00-871-5016	80063	SM-D-414385	NETWORK,PHASE CHANG	EA	1
105	24	PAFZZ	5940-00-082-4922	81349	SE18XE01	TERMINAL,STUD	EA	5
105	25	PAFZZ	5930-01-011-3169	80063	SM-D-414396	SWITCH,ROTARY 1 SECTION,SPTT,3 POSITION,NON SHORTING TYPE CONTACTS	EA	1
105	26	PAFZZ	5305-00-984-4984	96906	MS35206-227	SCREW,MACHINE	EA	2
105	27	PAFZZ	5310-00-045-4007	96906	MS35338-41	WASHER,LOCK	EA	3
105	28	PAFZZ	5310-00-883-5931	96214	410894-38	WASHER,LOCK	EA	1
105	29	PAFZZ	5925-00-118-1098	81541	AP2-1A	CIRCUIT BREAKER 50 VDC,.113 OHM PORM 10 PCT SERIES RES AT 25 DEG C,3 AMP CUR	EA	1
105	30	PAFZZ	5961-00-087-6047	81349	JAN1N645	SEMICONDUCTOR DEVIC	EA	1
105	31	XBFZZ		80063	SM-B-414404	BRACKET ASSY	EA	1
105	32	PAHZZ		80063	SM-B-413964-2	STRAP	EA	1
105	33	PAFZZ		81349	SR2CF36B2HG0	SWITCH,ROTARY 1 SECTION,SPDT,SHORTING TYPE CONTACTS,2 POSITION	EA	1
105	34	PAHZZ	5305-00-984-4983	96906	MS24584-23	SCREW,MACHINE	EA	2
105	35	PAHZZ	5305-00-558-4889	96906	MS35223-14	SCREW,MACHINE	EA	2
105	36	PAHZZ	5310-00-543-2410	96906	MS35338-40	WASHER,LOCK	EA	2

(1) ILLUSTRATION (a) FIG NO	(1) ILLUSTRATION (b) ITEM NO	(2) SMR CODE	(3) NATIONAL STOCK NUMBER	(4) FSCM	(5) PART NUMBER	(6) DESCRIPTION USABLE ON CODE	(7) U/M	(8) QTY INC IN UNIT
105	37	PAHHH		80063	SM-B-414417	BRACKET ASSY	EA	1
105	38	PAFZZ	5305-00-984-4988	96906	MS35206-228	SCREW,MACHINE	EA	1
105	39	PAFZZ	5340-00-852-7297	71616	CPC-1953-68	CLAMP,LOOP	EA	1
105	40	PAFZZ	5305-00-984-4989	96906	MS35206-229	SCREW,MACHINE	EA	1
105	41	PAFZZ	5310-00-818-5424	72962	96NM107-62	NUT,SELF-LOCKING,HE	EA	1
105	42	PAFZZ	5310-00-167-0832	88044	AN960-6L	WASHER,FLAT	EA	1
105	43	ADDDD		80063	SM-E-414411	CONTROL WIRING ASSY	EA	1
105	44	PAHZZ	5945-00-823-2606	80063	SM-D-414402	SOLENOID,ELECTRICAL 22 TO 30 VDCW,5 S ON,55 S OFF,1.8 LB LOAD AND .125 IN TRAVEL	EA	1
105	45	PAFZZ	5340-00-782-8737	80205	NAS1397P4N	CLAMP,LOOP	EA	1
105	46	PAFZZ	5905-00-853-6516	01121	GWE-6166A	RESISTOR,VARIABLE,N 1100 OHMS MAX,1/4 WATT POWER RATING,S TAPER	EA	1
105	47	PAHZZ	5961-00-577-6214	81349	JAN1N538	SEMICONDUCTOR DEVIC	EA	1
105	48	PAFZZ	5925-00-823-2615	81541	AP2-18	CIRCUIT BREAKER .0062 OHM,PORM 20 PCT SERIES RES AT 25 DEG C,15.0 AMP CUR RAT	EA	1
105	49	XBFZZ		80063	SM-B-414387	BRACKET	EA	1
105	50	PAHZZ	5310-00-939-0903	96906	MS35335-86	WASHER,LOCK	EA	3
105	51	PAFDD	5820-00-884-2492	80063	SM-C-414649	SEL CONTROL ASSY	EA	1
105	52	PAFDL	5820-00-884-2498	80063	SM-C-414770	NULL SWITCH ASSY	EA	1
105	53	PAFZA	5935-00-800-0813	95238	SM114-20S-GD	CONNECTOR,RECEPTACL 11 SOCKET TYPE CONTACTS	EA	1
105	54	AFFDA		80063	SM-D-416342	OSC-BUFFER ASSY	EA	1
105	55	PAFZZ	5930-00-823-0764	91929	JX-46	ADAPTER,SWITCH ACTU	EA	1
105	56	PAHZZ	5930-00-803-4570	96906	MS24547-1	SWITCH,SENSITIVE	EA	1
105	57	PAHZZ	5305-00-989-0682	96906	MS35206-205	SCREW,MACHINE	EA	2
105	58	PAHZZ	5970-00-089-8568	80063	SM-B-414380	INSULATOR,PLATE	EA	1
105	59	PAFDL		80063	SM-D-921126	OSCILLATOR ASSY,RF	EA	1
105	60	AFFDA		80063	SM-D-416345	TUNER,RADIO FREQUEN	EA	1
105	61	PAFZZ	5330-00-856-4754	80063	SM-C-414114-4	PACKING,PREFORMED	EA	1
105	62	PAHZZ		80063	SM-B-414786	PLATE ASSY	EA	1
105	63	PAHZZ	5305-00-889-2997	96906	MS35206-215	SCREW,MACHINE	EA	2
105	64	XBHZZ		80063	SM-C-374807	SHIELD,GEAR	EA	1
105	65	PAFZZ	5910-00-050-8126	99515	EP-6D-10	CAPACITOR 0.5UF,PORM 5 PCT,50 VDCW	EA	1
105	66	PAFZZ	6105-00-823-2604	80740	1018-112-011	MOTOR,DC 115 VRMS,400 HZ,10000 RPM MIN,6.0 WATT MAX INPUT POWER	EA	1
105	67	PAFZZ	5340-00-729-6763	00141	L2-2	SPACER,SLEEVE	EA	3
105	68	PAFZZ	5305-00-145-2127	80063	SM-B-374854	SCREW,CAP,SOCKET	EA	3
105	69	XBHZZ		80063	SM-B-414646	BRACKET ASSY	EA	1
105	70	PAFDL		80063	SM-D-921412	SERVO AMPL ASSY	EA	1
105	71	PAFZZ	5950-00-823-3239	97315	BC4519	TRANSFORMER,POWER 1 WATT PWR LEVEL AT 25.5 VRMS,PORM 5 PCT, 110 VRMS,400 HZINPUT	EA	1
105	72	XBFFF		80063	SM-B-414708	BRACKET ASSY	EA	1
105	73	PAFZZ	5310-00-582-9176	30655	F92-1660-40	NUT,SELF-LOCKING,HE	EA	2

(1) ILLUSTRATION (a) FIG NO	(b) ITEM NO	(2) SMR CODE	(3) NATIONAL STOCK NUMBER	(4) FSCM	(5) PART NUMBER	(6) DESCRIPTION USABLE ON CODE	(7) U/M	(8) QTY INC IN UNIT
105	74	PAHHH	5940-00-089-1134	80063	SM-B-414801	TERMINAL BOARD	EA	1
105	75	PAFZZ	5910-00-267-1753	81349	M39022/01-1681	CAPACITOR,FIXED,MET	EA	2
105	76	PAHZZ	5305-00-889-3000	96906	MS35206-230	SCREW,MACHINE	EA	2
105	77	PAHZZ	5310-00-616-3554	96906	MS35335-29	WASHER,LOCK	EA	3
105	78	XBHZZ		80063	SM-C-414735	BRACKET ASSY	EA	1
105	79	PAHZZ	5310-00-137-3419	80063	SM-B-414389	NUT,PLAIN,SQUARE	EA	1
105	80	PAHZZ	5307-00-169-5020	80063	SM-B-414391	STUD,SELF-LOCKING	EA	2
105	81	PAFZZ	5355-00-874-3594	80063	SM-C-414388	STOP,ELECTRICAL SWI	EA	1
105	82	PAFZZ	5310-01-127-1408	03877	HP35W-1C-4	WASHER,FLAT	EA	2
105	83	PAFZZ	5310-00-934-9751	96906	MS35650-302	NUT,PLAIN,HEXAGON	EA	1
105	84	PAFZZ	5961-00-935-0138	81349	JAN1N1202A	SEMICONDUCTOR DEVIC	EA	1
105	85	PAFZZ	5310-00-045-3296	96906	MS35338-43	WASHER,LOCK	EA	1
105	86	PAFZZ	5310-00-167-0834	88044	AN960-10L	WASHER,FLAT	EA	1
105	87	PAFZZ		03877	HP35W-1C-5	WASHER,FLAT	EA	1
105	88	PAHZZ	5940-00-681-8184	96906	MS0035431-8	TERMINAL,LUG	EA	1
105	89	PAHHH	3020-00-884-2468	80063	SM-B-414766	GEAR ASSY	EA	1
105	90	PAHZZ	5305-00-336-2152	88044	AN565D4H2	SETSCREW	EA	2
105	91	PAFZZ	5905-00-892-6543	65092	341124	RESISTOR,VARIABLE,W 10200 OHMS MAX,TEMP COEF MINUS 15 PLUS 75 PPM/DEG C,1 WATT	EA	1
105	92	PAOZZ	5305-00-558-4887	96906	MS35265-14	SCREW,MACHINE	EA	2
105	93	XBFZZ		80063	SM-B-414808	CLAMP ASSY	EA	1
105	94	PAHZZ	3040-00-884-2483	80063	SM-C-414373	CLAMP,MTG	EA	1
105	95	PAHZZ	3020-00-884-2467	80063	SM-C-414372	GEAR,BEVEL	EA	1
105	96	PAHZZ	5305-00-139-7093	80063	SM-C-413909-1	SCREW,CAP,SOCKET HE	EA	1
105	97	PAHHH	5930-00-876-2353	80063	SM-D-414632	SWITCH ASSEMBLY	EA	1
105	98	XBHZZ		80063	SM-C-374815	SHIM	EA	V
105	99	PAFZZ	5905-00-552-5490	81349	RV6LAYSA252A	RESISTOR,VARIABLE,W	EA	1
105	100	PAOZZ	6210-00-183-0513	81349	LC35YT2	LENS,LIGHT	EA	1
105	101	PAFZZ	6210-00-176-4928	81349	LH89/1	LIGHT,INDICATOR	EA	1
105	102	PAHZZ	5305-00-823-5834	80063	SM-B-414796	SCREW,EXTERNALLY RE	EA	2
105	103	XBHZZ		80063	SM-B-414797	SHIM	EA	2
105	104	PAHZZ	5320-00-205-7930	96906	MS20450C8AD6	RIVET,TUBULAR	EA	3
105	105	PAFZZ		80063	SM-B-414795	PLATE	EA	2
105	106	PAHZZ		80063	SM-D-414800	HINGE ASSY	EA	1
105	107	PAHZZ		80063	SM-D-414799	DOOR	EA	1
105	108	PAFZZ	9905-00-884-2496	80063	SM-D-414798	PLATE,INSTRUCTION	EA	1
105	109	PAFZZ	4010-00-221-9445	80063	SM-B-283567	WIRE ROPE ASSEMBLY	EA	1
105	110	PAFZZ	4010-00-221-9445	80063	SM-B-283567	WIRE ROPE ASSEMBLY	EA	1
105	111	PAOZZ	5975-00-241-5146	80063	SM-C-414409	CAP,END SEAL,ELECTR	EA	1
105	112	PAOZZ	5330-00-584-0265	96906	MS28775-012	PACKING,PREFORMED	EA	1

(1) ILLUSTRATION (a) FIG NO	(1) ILLUSTRATION (b) ITEM NO	(2) SMR CODE	(3) NATIONAL STOCK NUMBER	(4) FSCM	(5) PART NUMBER	(6) DESCRIPTION USABLE ON CODE	(7) U/M	(8) QTY INC IN UNIT
105	113	XBFZZ		80063	SM-C-414406	BRACKET	EA	1
105	114	PAFZZ	5940-00-051-6257	81349	SE079801	TERMINAL,STUD	EA	1
105	115	XBHZZ		80063	SM-B-414397	BUMPER	EA	1
105	116	PAHZZ	5310-01-057-8778	30655	22NCFMA2-40	NUT,CLINCH	EA	2
105	117	XBFZZ		80063	SM-B-414659	BUMPER	EA	1
105	118	XBFZZ		80063	SM-C-414376	BRACKET	EA	1
105	119	PAHZZ		98291	RST-SM1 TUR BLU	TERMINAL,STUD	EA	1
105	120	PAHZZ	5320-00-850-2273	96906	MS16535-152	RIVET,TUBULAR	EA	2
105	121	PAHZZ	5940-00-553-2471	98291	RST-SM-1 TUR	TERMINAL,STUD	EA	1
105	122	XAHZZ		80063	SM-C-414737	BRACKET	EA	1
105	123	PAHZZ	5310-00-158-5129	80063	SM-B-414738	WASHER,FLAT	EA	2
105	124	XBFZZ		80063	SM-B-414819	BUMPER	EA	1

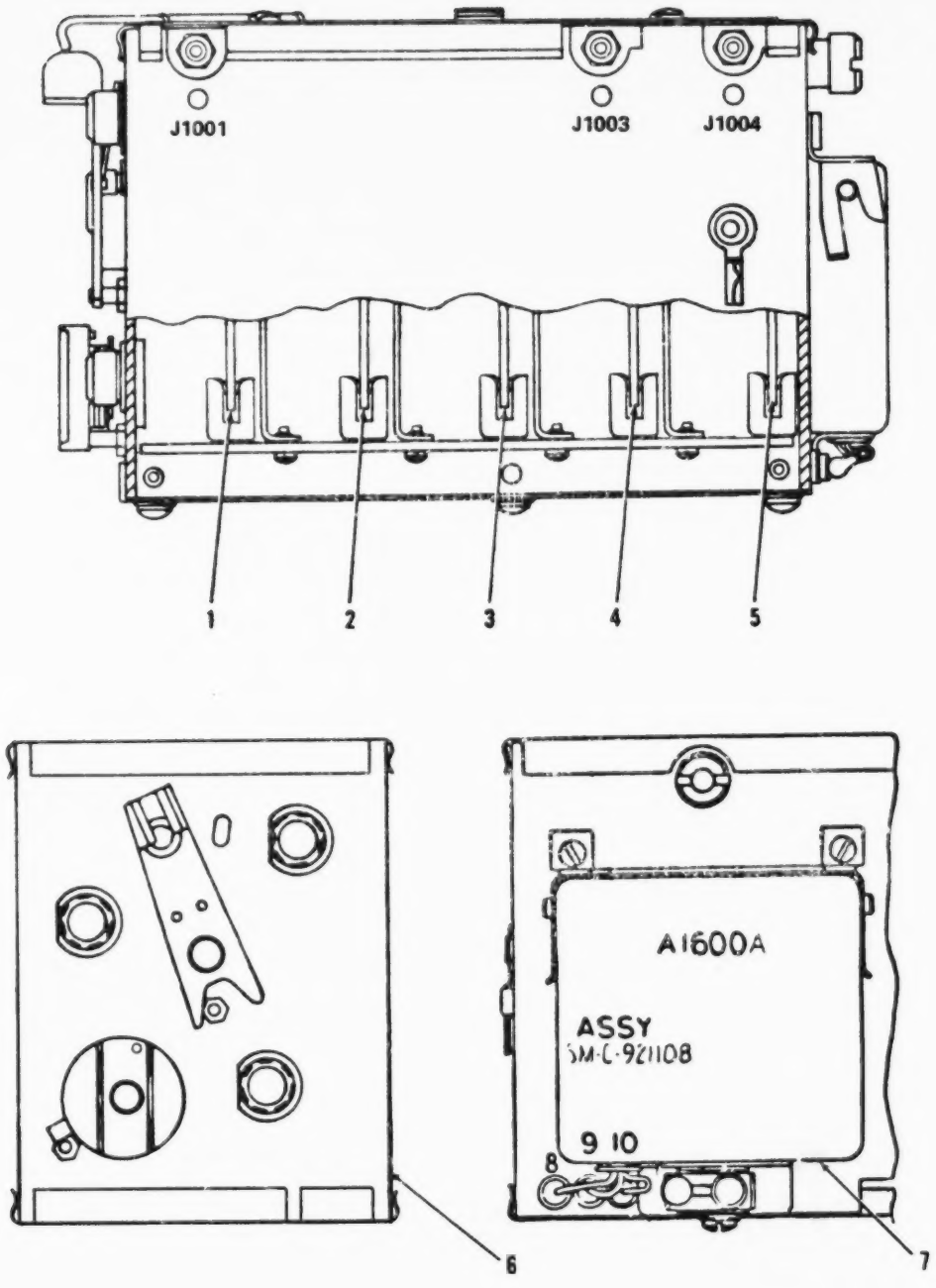

Figure 106. Tuner, Radio Frequency

(1) ILLUSTRATION (a) FIG NO	(1) ILLUSTRATION (b) ITEM NO	(2) SMR CODE	(3) NATIONAL STOCK NUMBER	(4) FSCM	(5) PART NUMBER	(6) DESCRIPTION USABLE ON CODE	(7) U/M	(8) QTY INC IN UNIT
						GROUP 010101 TUNER,RADIO FREQUENCY		
						A1000A,SC-DL-414368		
106	1	PAFDD		80063	SM-D-374983	CIRCUIT CARD ASSEMB	EA	1
106	2	PAFDD	5820-00-853-5917	80063	SM-D-416370	AMPLIFIER,RADIO FRE	EA	1
106	3	PAFZZ	5820-00-853-5918	80063	SM-D-374990	AMPLIFIER,RADIO FRE	EA	1
106	4	PAFDD	5820-00-853-5916	80063	SC-DL-416397	MIXER STAGE,FREQUEN	EA	1
106	5	PAFDD		80063	SM-D-921094	TUNER OSC BD ASSY	EA	1
106	6	PAFHH	5820-00-087-0061	80063	SM-D-188980	RECEIVER SUBASSEMBL	EA	1
106	7	PAFDL	5820-00-858-6476	80063	SM-C-921108	POWER SUPPLY ASSY	EA	1

LEGEND

REF DES	ITEM NO	REF DES	ITEM NO	REF DES	ITEM NO	REF DES	ITEM NO
CR1401	1	C1408	2	R1402	10	R1410	9
C1401	2	C1409	4	R1403	11	R1411	16
C1402	2	C1410	2	R1404	12	R1412	9
C1403	2	C1411	5	R1405	13	R1413	17
C1404	3	J1003	6	R1406	14	T1401	18
C1405	2	L1401	7	R1407	13	T1402	19
C1406	2	Q1401	8	R1408	15	V1401	20
C1407	2	R1401	9	R1409	13		

EL6JB088

Figure 107. Mixer Stage, Frequency, Mixer Board Assembly (Sheet 1 of 3).

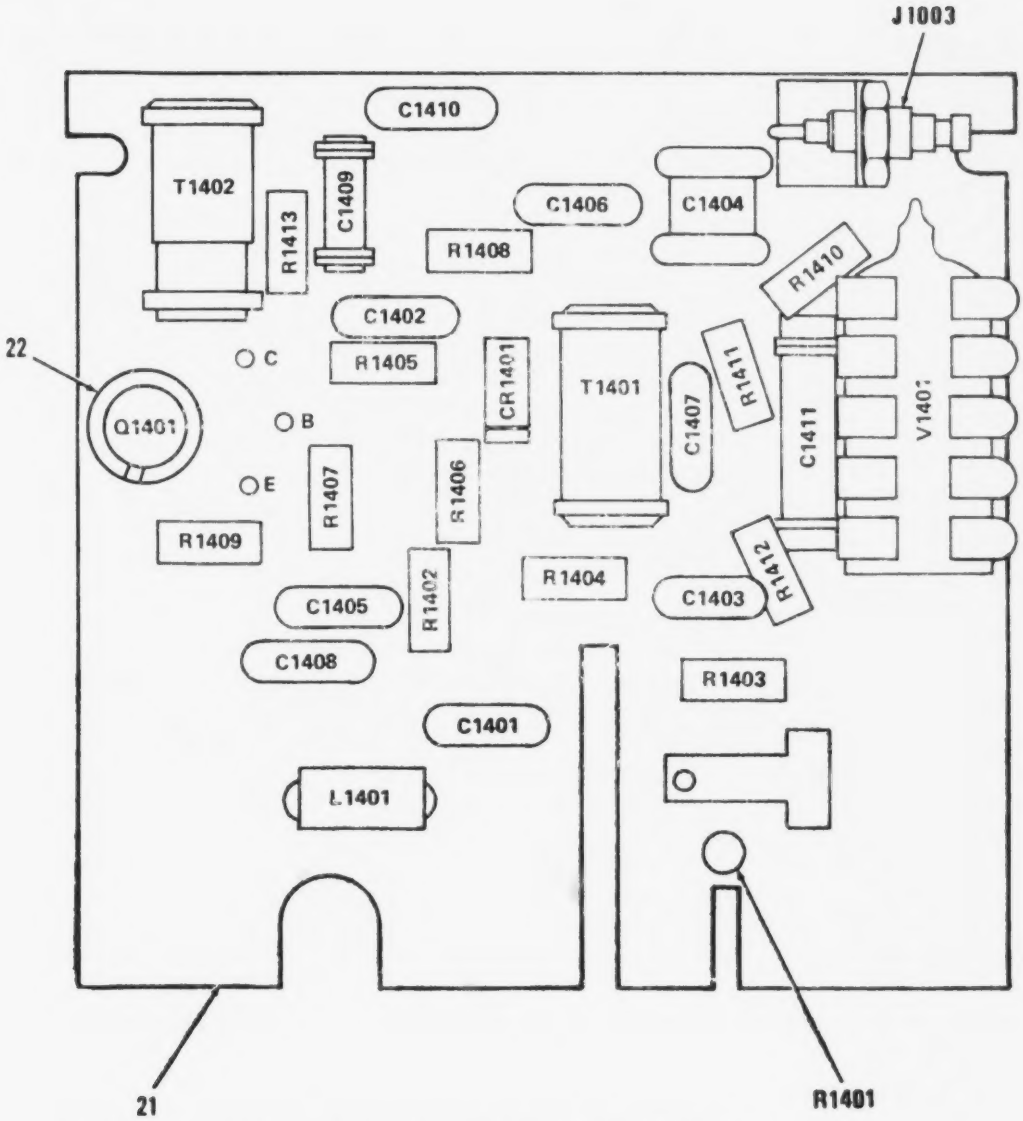

Figure 107. Mixer Stage, Frequency, Mixer Board Assembly (Sheet 2 of 3).

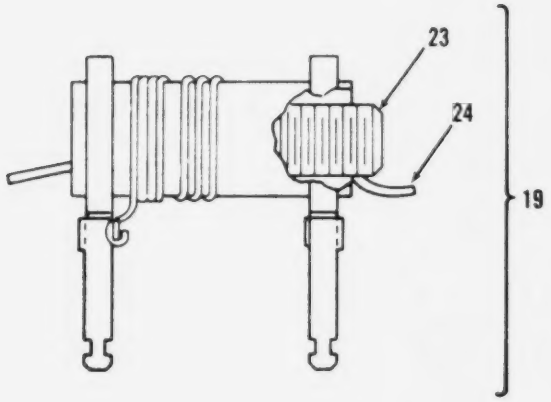

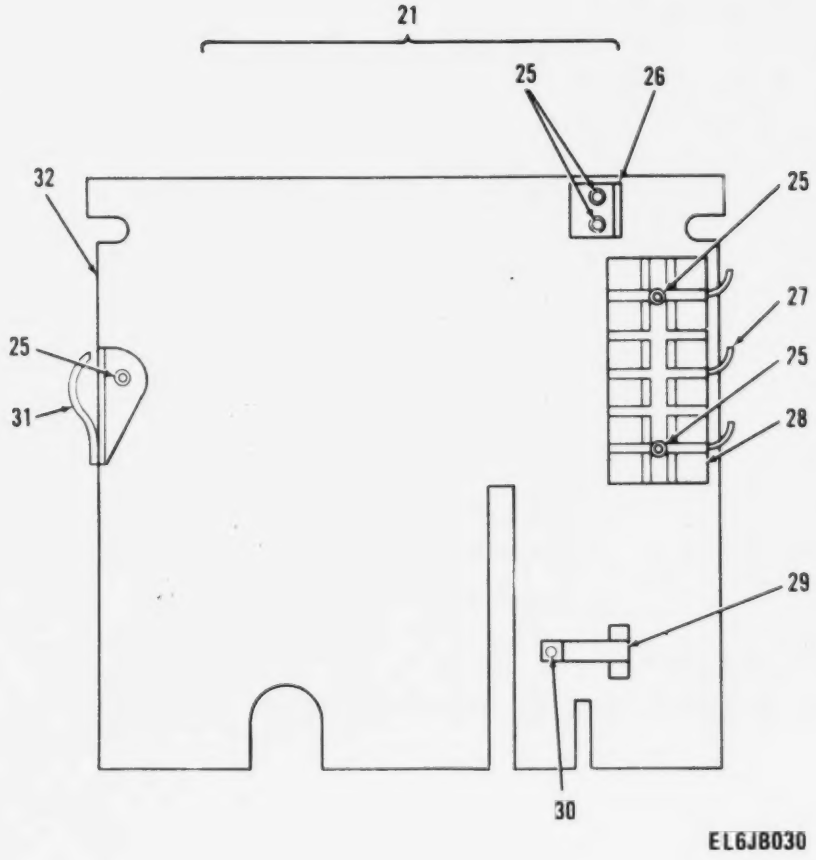

Figure 107. Mixer Stage Frequency, Mixer Board Assembly (Sheet 3 of 3).

(1) ILLUSTRATION (a) FIG NO	(1) ILLUSTRATION (b) ITEM NO	(2) SMR CODE	(3) NATIONAL STOCK NUMBER	(4) FSCM	(5) PART NUMBER	(6) DESCRIPTION / USABLE ON CODE	(7) U/M	(8) QTY INC IN UNIT
						GROUP 01010104 MIXER STAGE,FREQUENCY		
						(MIXER BD ASSY)		
						A1400 AND A1400A		
						SM-D-374986		
						(SAME AS GROUP 01010101)		
107	1	PADZZ	5961-00-938-1135	81349	JAN1N4148	SEMICOND DVC,DIODE	EA	1
107	2	PADZZ	5910-00-464-8946	72982	855-027-X5T0472M	CAPACITOR,FIXED,CER .0047 UF,PORM 20 PCT,200 VDCW	EA	6
107	3	PADZZ	5910-00-924-4307	81349	PC51J5R5	CAPACITOR,VARIABLE	EA	1
107	4	PADZZ	5910-00-807-1527	81349	CC22CH8R0C	CAPACITOR,FIXED,CER	EA	1
107	5	PADZZ	5910-00-990-6840	72982	302-012S3B0109C	CAPACITOR,FIXED,CER	EA	1
107	6	PADZA		02660	27-3	CONNECTOR,RECEPTACL 50 OHMS NOMINAL IMPEDANCE	EA	1
107	7	PADZZ	5950-00-703-0907	96906	MS75008-42	COIL,RADIO FREQUENC	EA	1
107	8	PADZZ	5961-00-911-6015	81349	JAN2N3251A	TRANSISTOR	EA	1
107	9	PADZZ	5905-00-111-4750	81349	RCR07G301JS	RESISTOR,FIXED,COMP	EA	3
107	10	PADZZ	5905-00-111-4845	81349	RCR07G201JS	RESISTOR,FIXED,COMP	EA	1
107	11	PADZZ	5905-00-120-9154	81349	RCR07G471JS	RESISTOR,FIXED,COMP	EA	1
107	12	PADZZ	5905-00-106-1356	81349	RCR07G152JS	RESISTOR,FIXED,COMP	EA	1
107	13	PADZZ	5905-00-141-0743	81349	RCR07G392JS	RESISTOR,FIXED,COMP	EA	3
107	14	PADZZ	5905-00-141-0717	81349	RCR07G473JS	RESISTOR,FIXED,COMP	EA	1
107	15	PADZZ	5905-00-120-9152	81349	RCR07G274JS	RESISTOR,FIXED,COMP	EA	1
107	16	PADZZ	5905-00-115-7953	81349	RCR07G180JS	RESISTOR,FIXED,COMP	EA	1
107	17	PADZZ	5905-00-119-3504	81349	RCR07G273JS	RESISTOR,FIXED,COMP	EA	1
107	18	PADZZ	5950-01-011-4801	80063	SM-C-416328	TRANSFORMER,RADIO F 13 TO 15 UH AT 2.5 MHZ,100 VDCW,6 MILLIA CUR	EA	1
107	19	PADDD	5950-01-011-4800	80063	SM-C-416329	TRANSFORMER,RADIO F 19.0 UH MIN,24.0 UH MAX AT 2.5 MHZ	EA	1
107	20	PADZZ	5960-00-548-3072	81349	JAN6205	ELECTRON TUBE	EA	1
107	21	XADDA		80063	SM-D-374985	MIXER BOARD ASSY	EA	1
107	22	PADZZ	5970-00-989-8333	07047	A-10042	INSULATOR,DISK	EA	1
107	23	PAFZZ	5950-00-904-1057	71279	3226-3	CORE,ADJUSTABLE TUN	EA	1
107	24	PAFZZ		80063	SM-B-481760	STRIP,PLASTIC	EA	1
107	25	PADZZ	5320-00-081-7418	96906	MS16535-12	RIVET,TUBULAR	EA	2
107	26	XDDZZ		80063	SM-B-416356-1	BRACKET	EA	1
107	27	XDDZA		80063	SM-B-416376	CONTACT	EA	1
107	28	PADZZ	5960-00-729-5343	18915	3A-3	SHIELD,ELECTRON TUB	EA	1
107	29	XDDZA		80063	SM-B-416373	CONTACT	EA	1
107	30	XDDZZ		80063	SM-B-416374	STAND-OFF	EA	1
107	31	XDDZA		80063	SM-C-416339-2	CONTACT	EA	1
107	32	PADZA	5820-00-457-0568	80063	SM-D-374984	PRINTED WIRING BOAR	EA	1

LEGEND

REF DES	ITEM NO	REF DES	ITEM NO	REF DES	ITEM NO	REF DES	ITEM NO
CR1501	1	C1510	9	Q1502	16	R1509	24
C1501	2	C1511	6	Q1503	16	R1510	25
C1502	3	C1512	9	R1501	17	R1511	26
C1503	4	C1513	10	R1502	18	R1512	27
C1504	5	C1514	11	R1503	19	R1513	25
C1505	6	J1004	12	R1504	20	R1514	18
C1506	7	L1501	13	R1505	21	R1515	28
C1507	8	L1502	14	R1506	22	T1501	29
C1508	9	L1503	15	R1507	23	T1502	30
C1509	9	Q1501	16	R1508	22		

PREFIX ALL REFERENCE
DESIGNATIONS WITH A1000AA1500A

EL6JB217

Figure 108. Oscillator, Radio Frequency, Tuner Oscillator Board (Sheet 1 of 3).

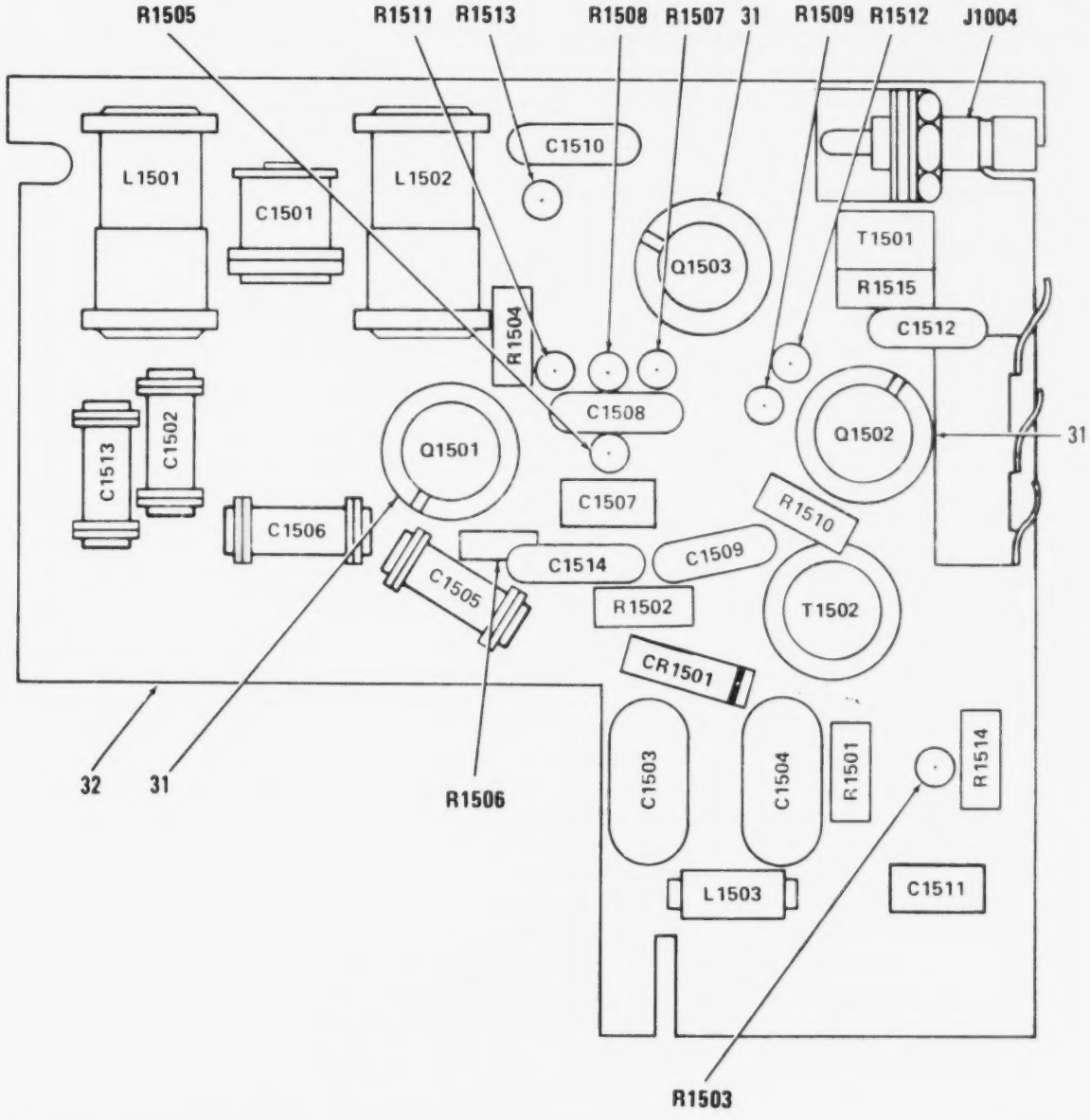

Figure 108. Oscillator, Radio Frequency, Tuner Oscillator Board (Sheet 2 of 3).

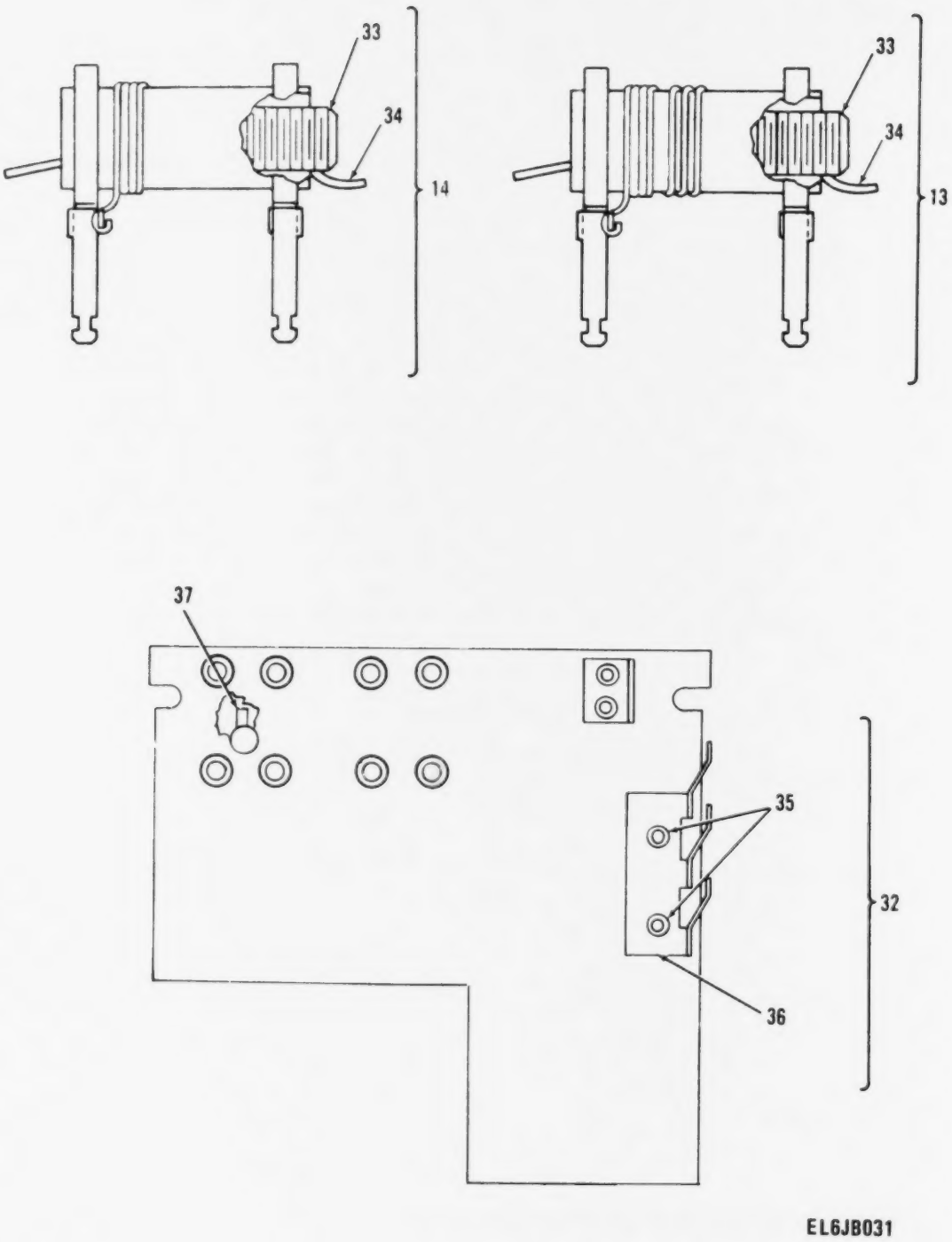

Figure 108. Oscillator, Radio Frequency, Tuner Oscillator Board (Sheet 3 of 3).

(1) ILLUSTRATION (a) FIG NO	(1) ILLUSTRATION (b) ITEM NO	(2) SMR CODE	(3) NATIONAL STOCK NUMBER	(4) FSCM	(5) PART NUMBER	(6) DESCRIPTION / USABLE ON CODE	(7) U/M	(8) QTY INC IN UNIT
						GROUP 01010105 OSCILLATOR,RADIO FRE		
						QUENCY (TUNER OSCILLATOR BD)		
						A1500A SM-D-921094		
108	1	PADZZ	5961-00-938-5251	80131	1N3552	SEMICONDUCTOR DEVIC	EA	1
108	2	PADZZ	5910-00-924-4307	81349	PC51J5R5	CAPACITOR,VARIABLE,	EA	1
108	3	PADZZ	5910-00-990-6815	72982	301-011U2J03098	CAPACITOR,FIXED,CER 3.0 UUF,PORM 0.1 UUF,500 VDCW,N750 PORM 120 TEMP COEF	EA	1
108	4	PADZZ	5910-00-461-8294	72136	DM15F511G	CAPACITOR,FIXED,MIC 510 UUF,PORM 2 PCT,300 VDCW	EA	1
108	5	PADZZ	5910-00-456-0319	72136	DM15F511K	CAPACITOR,FIXED,MIC 510 UUF,PORM 10 PCT,300 VDCW	EA	1
108	6	PADZZ	5910-00-615-9452	81349	CC22CH180G	CAPACITOR,FIXED,CER	EA	2
108	7	PADZZ	5910-00-726-2448	81349	CC22CH5R0C	CAPACITOR,FIXED,CER	EA	1
108	8	PADZZ	5910-00-114-0225	81349	M39014/01-1327	CAPACITOR,FIXED,CER	EA	1
108	9	PADZZ	5910-00-938-7506	18796	0801011X5F0 102K	CAPACITOR,FIXED,CER .001 UF,PORM 10 PCT,500 VDCW	EA	4
108	10	PADZZ		72982	301-011U2K01098	CAPACITOR,CER DIEL 1.0 UUF,PORM .1 UUF,500 VDCW,N750 PORM 250 TEMP COED	EA	1
108	11	PADZZ		81349	CMR05C2R0DPDP	CAPACITOR,MICA DIEL	EA	1
108	12	PADZZ		02660	27-3	CONNECTOR,RECEPTACL 50 OHMS NOMINAL IMPEDANCE	EA	1
108	13	PADZZ	5950-01-126-2909	80063	SM-C-416321-1	COIL,RADIO FREQUENC .200 UH MIN,.270 UH MAX INDUCTANCE AT 25 MHZ	EA	1
108	14	PADDD	5950-01-126-2910	80063	SM-C-416310	COIL,RADIO FREQ 1.43 UH MIN 2.20 UH MAX INDUCTANCE AT 7.9 MHZ	EA	1
108	15	PADZZ	5950-00-449-4487	06560	10100-171	COIL,RADIO FREQUENC 2.0 UH INDUCTANCE PORM 3 PCT AT 7.9 MHZ.	EA	1
108	16	PADZZ		80063	SM-A-921102	TRANSISTOR	EA	3
108	17	PADZZ	5905-00-119-3504	81349	RCR07G273JS	RESISTOR,FIXED,COMP	EA	1
108	18	PADZZ	5905-00-116-8556	81349	RCR07G223JS	RESISTOR,FIXED,COMP	EA	2
108	19	PADZZ	5905-00-110-7622	81349	RCR07G682JS	RESISTOR,FIXED,COMP	EA	1
108	20	PADZZ	5905-00-106-3666	81349	RCR07G103JS	RESISTOR,FIXED,COMP	EA	1
108	21	PADZZ	5905-00-114-0711	81349	RCR07G472JS	RESISTOR,FIXED,COMP	EA	1
108	22	PADZZ	5905-00-119-8768	81349	RCR07G821JS	RESISTOR,FIXED,COMP	EA	2
108	23	PADZZ	5905-00-119-8812	81349	RCR07G121JS	RESISTOR,FIXED,COMP	EA	1
108	24	PADZZ	5905-00-114-5343	81349	RCR07G182JS	RESISTOR,FIXED,COMP	EA	1
108	25	PADZZ	5905-00-126-6683	81349	RCR07G332JS	RESISTOR,FIXED,COMP	EA	1
108	26	PADZZ	5905-00-106-1356	81349	RCR07G152JS	RESISTOR,FIXED,COMP	EA	1
108	27	PADZZ	5905-00-110-7620	81349	RCR07G102JS	RESISTOR,FIXED,COMP	EA	1
108	28	PADZZ	5905-00-105-7764	81349	RCR07G222JS	RESISTOR,FIXED,COMP	EA	1
108	29	PADZZ		80063	SM-D-921100	TRANSFORMER	EA	1
108	30	PADZZ		80063	SM-C-921099	TRANSFORMER ASSY	EA	1
108	31	PADZZ		07047	A-10044DAP BLK	INSULATOR,DISK	EA	3
108	32	PAFZZ	5950-00-904-1057	71279	3226-3	CORE,ADJUSTABLE TUN	EA	1
108	33	PAFZZ		80063	SM-B-481760	STRIP,PLASTIC	EA	1
108	34	PADZZ	5320-00-081-7418	96906	MS16535-12	RIVET,TUBULAR	EA	2
108	35	XDDZZ		80063	SM-C-374867	CONTACT	EA	1

(1) ILLUSTRATION (a) FIG NO	(1) ILLUSTRATION (b) ITEM NO	(2) SMR CODE	(3) NATIONAL STOCK NUMBER	(4) FSCM	(5) PART NUMBER	(6) DESCRIPTION USABLE ON CODE	(7) U/M	(8) QTY INC IN UNIT
108	36	XDDZZ		80063	SM-B-416368	SPRING,HELICAL.....	EA	2

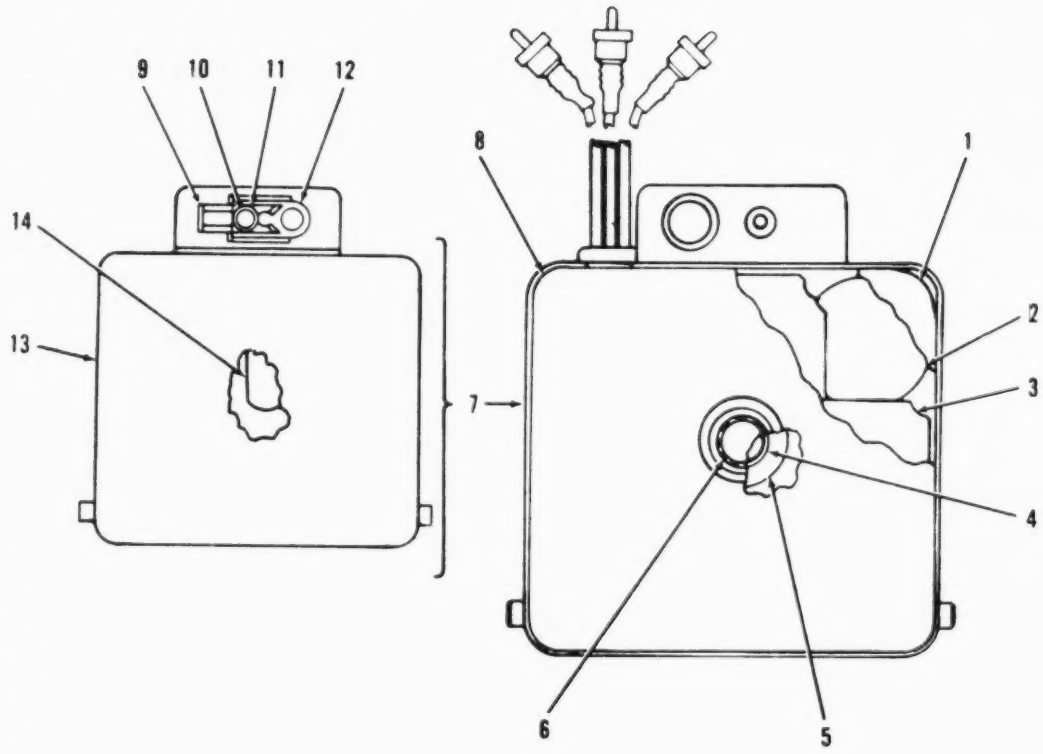

Figure 109. Power Supply Assembly (Sheet 1 of 3).

LEGEND

REF DES	ITEM NO	REF DES	ITEM NO	REF DES	ITEM NO	REF DES	ITEM NO
CR1601	15	C1601	16	L1601	19	R1602	22
CR1602	15	C1602	16	Q1601	20	R1603	23
CR1603	15	C1603	17	Q1602	20	R1604	24
CR1604	15	C1604	17	R1601	21	T1601	25
CR1605	15	C1605	18				

PREFIX ALL REFERENCE DESIGNATIONS WITH A1000AA1600A

EL6JB214

Figure 109. Power Supply Assembly (Sheet 2 of 3).

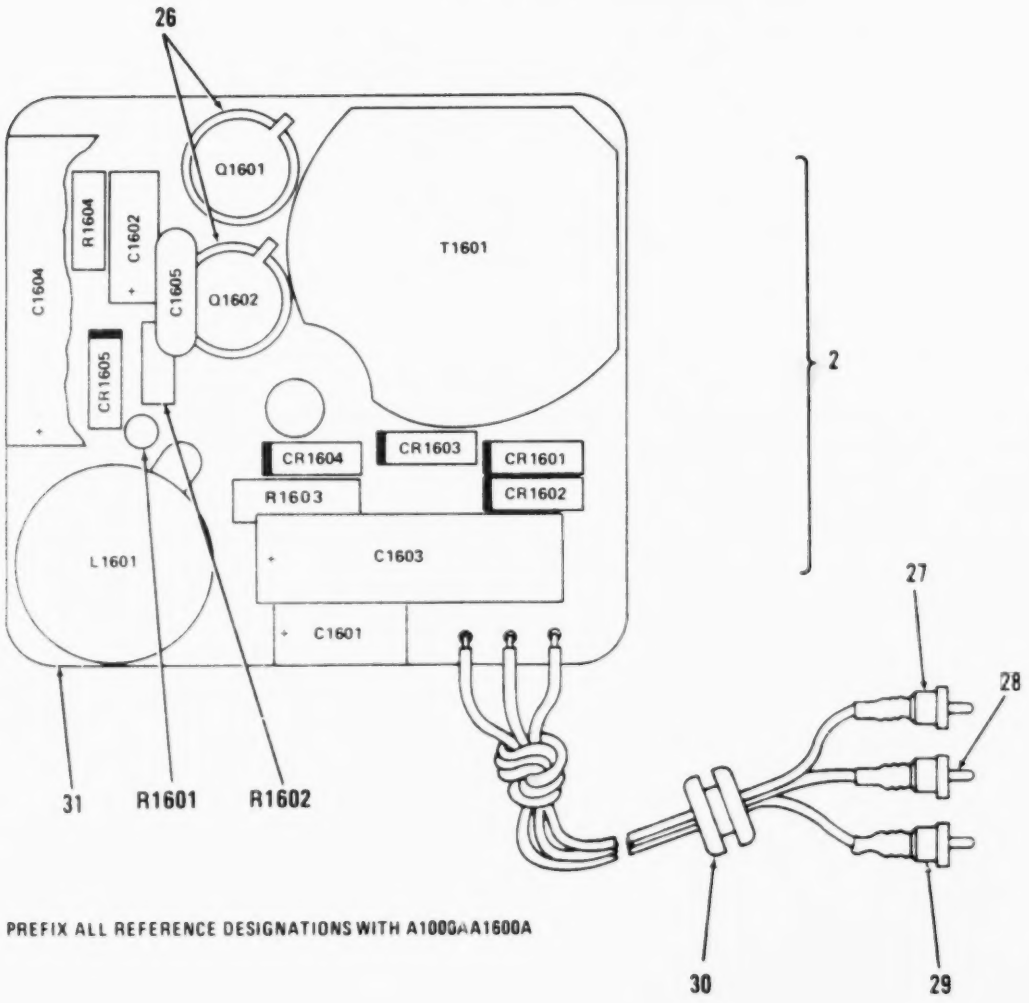

Figure 109. Power Supply Assembly (Sheet 3 of 3).

(1) ILLUSTRATION (a) FIG NO	(b) ITEM NO	(2) SMR CODE	(3) NATIONAL STOCK NUMBER	(4) FSCM	(5) PART NUMBER	(6) DESCRIPTION USABLE ON CODE	(7) U/M	(8) QTY INC IN UNIT
						GROUP 01010106 POWER SUPPLY		
						A1600A SM-C-921108		
109	1	XDDZZ		80063	SM-B-416319	INSULATOR,PLATE	EA	1
109	2	XADDD		80063	SM-D-921109	PWR SPLY BOARD ASSY	EA	1
109	3	XDDZZ		80063	SM-B-416320	INSULATOR,PLATE	EA	1
109	4	XDDZZ		80063	SM-B-416318	SPACER	EA	1
109	5	XDDZZ		80063	SM-B-416399	WASHER,FLAT	EA	1
109	6	PADZZ	5305-00-151-6886	78189	61-040441-40-4702-4802	SCREW,ASSEMBLED	EA	1
109	7	XDDDD		80063	SM-C-416306	CASE ASSY	EA	1
109	8	XADZZ		80063	SM-C-416317	COVER	EA	1
109	9	PADZZ	5325-00-262-9130	88447	38881-L	LATCH,SNAPSLIDE FAS	EA	1
109	10	XDDZZ		88447	38901-R	RIVET,TUBULAR	EA	1
109	11	PADZZ		88447	38891-W	WASHER,SPR TNSN	EA	1
109	12	XDDZZ		88447	38871-G-2	GUIDE	EA	1
109	13	XADZZ		80063	SM-C-416311	CASE ASSY	EA	1
109	14	XDDZZ		80063	SM-B-416315	SPACER	EA	1
109	15	PADZZ	5961-00-087-6047	81349	JAN1N645	SEMICONDUCTOR DEVIC	EA	5
109	16	PADZZ		26769	CNW685C050X1	CAPACITOR,ELCTLT 6.8 UF,PORM 10 PCT,50 VDCW	EA	2
109	17	PADZZ		81349	CL31BQ02GMPG	CAPACITOR,ELCTLT	EA	2
109	18	PADZZ	5910-00-464-8946	72982	855-027-X5T0472M	CAPACITOR,FIXED,CER .0047 UF,PORM 20 PCT,200 VDCW	EA	1
109	19	PADZZ	5950-00-938-5280	93292	500-1010	REACTOR 1.5 MILLIH,PORM 30 PCT AT 0 MILLIA DC	EA	1
109	20	PADZZ		80063	SM-B-921113	TRANSISTOR	EA	2
109	21	PADZZ	5905-00-104-8358	81349	RCR07G822JS	RESISTOR,FIXED,COMP	EA	1
109	22	PADZZ	5905-00-105-7764	81349	RCR07G222JS	RESISTOR,FIXED,COMP	EA	1
109	23	PADZZ	5905-00-141-0598	81349	RCR20G561JS	RESISTOR,FIXED,COMP	EA	1
109	24	PADZZ	5905-00-110-0388	81349	RCR07G104JS	RESISTOR,FIXED,COMP	EA	1
109	25	PADZZ	5950-00-938-5281	93292	500-1011	TRANSFORMER,ELECTRI	EA	1
109	26	PADZZ	5961-01-100-3849	80063	SM-B-413797	RETAINER,TRANSISTOR	EA	2
109	27	PADZZ	5940-00-937-8028	98291	FTSM-14-P20-BLK	TERMINAL,FEEDTHRU,I	EA	1
109	28	PADZZ	5940-00-403-2837	98291	FTSM-14-P20-VIO	TERMINAL,FEEDTHRU,I	EA	1
109	29	PADZZ	5940-00-403-2836	98291	FTSM-14-P20-BRN	TERMINAL,FEEDTHRU,I	EA	1
109	30	XDDZZ		76385	Z2287-RC	GROMMET,RUBBER	EA	1
109	31	XADZZ		80063	SM-D-921110	POWER SUPPLY BOARD	EA	1

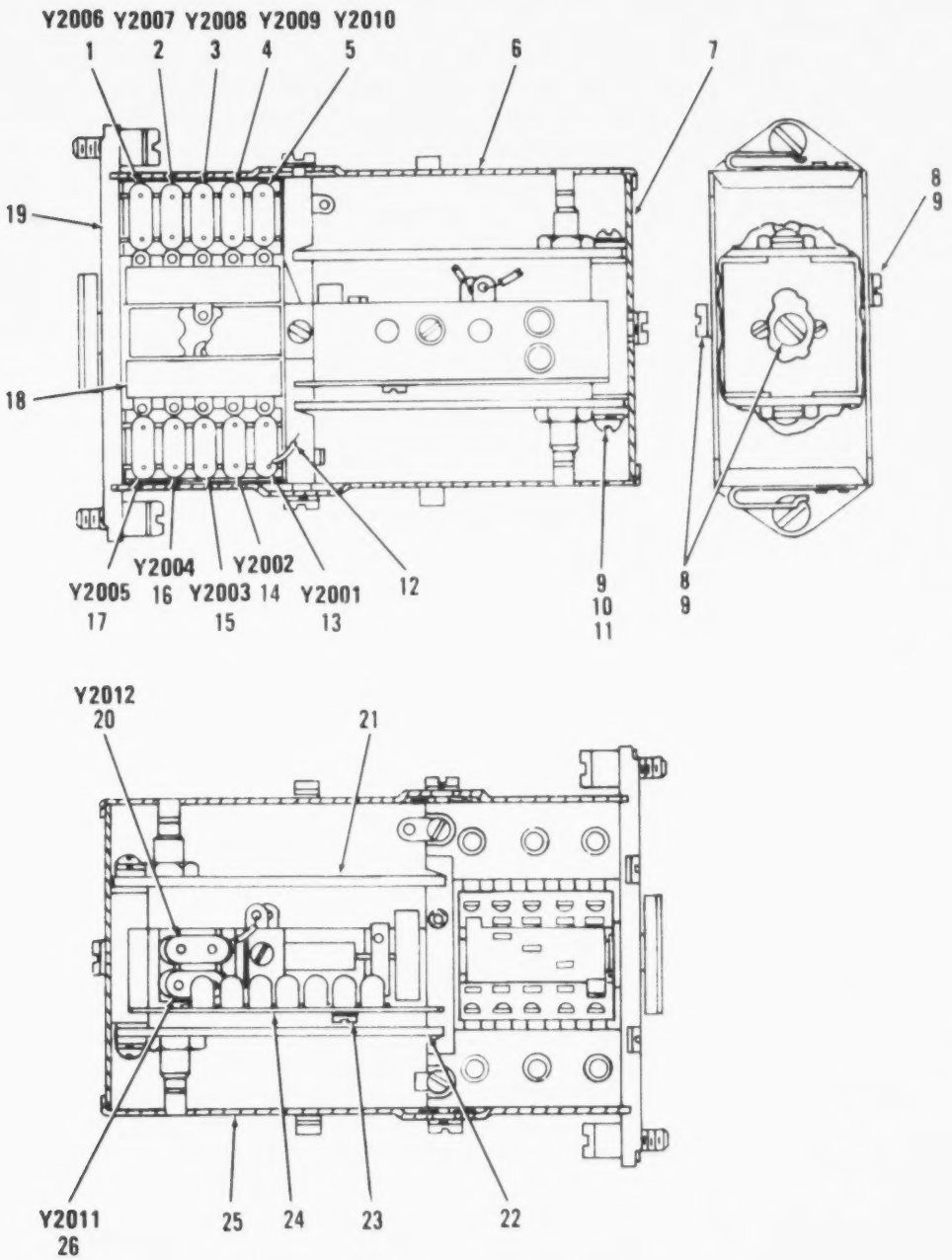

Figure 111. Oscillator Assembly, Radio Frequency (Sheet 1 of 2).

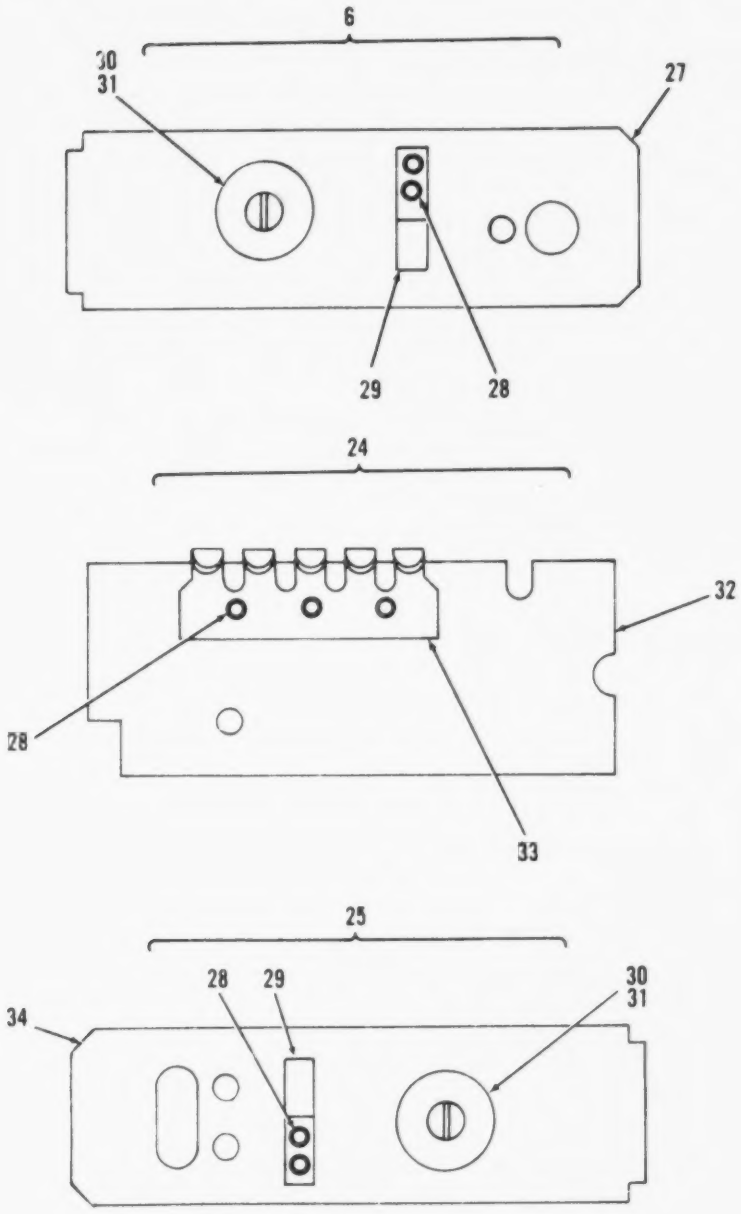

Figure 111. Oscillator Assembly, Radio Frequency (Sheet 2 of 2).

(1) ILLUSTRATION (a) FIG NO	(1) ILLUSTRATION (b) ITEM NO	(2) SMR CODE	(3) NATIONAL STOCK NUMBER	(4) FSCM	(5) PART NUMBER	(6) DESCRIPTION / USABLE ON CODE	(7) U/M	(8) QTY INC IN UNIT
						GROUP 010102 OSCILLATOR ASSY,RF		
						A2000A SM-D-921126		
111	1	PADZZ	5955-00-853-5909	80063	SM-C-414968-1	CRYSTAL UNIT,QUARTZ 46.850000 MHZ FREQ	EA	1
111	2	PADZZ	5955-00-853-6027	80063	SM-C-414968-2	CRYSTAL UNIT,QUARTZ 46.950000 MHZ FREQ	EA	1
111	3	PADZZ	5955-00-853-6451	80063	SM-C-414968-3	CRYSTAL UNIT,QUARTZ 47.050000 MHZ FREQ	EA	1
111	4	PADZZ	5955-00-879-1461	80063	SM-C-414968-4	CRYSTAL UNIT,QUARTZ 47.150000 MHZ FREQ	EA	1
111	5	PADZZ	5955-00-853-9708	80063	SM-C-414968-5	CRYSTAL UNIT,QUARTZ 47.250000 MHZ FREQ	EA	1
111	6	XDDZZ		80063	SM-C-414443	COVER ASSY	EA	1
111	7	PADZZ	5340-01-126-5334	80063	SM-C-414432	COVER	EA	1
111	8	PADZZ	5305-00-993-0190	96906	MS35206-214	SCREW,MACHINE	EA	3
111	9	PADZZ	5310-00-543-2410	96906	MS35338-40	WASHER,LOCK	EA	3
111	10	PADZZ	5310-00-150-4133	80063	SM-B-414433	WASHER,FLAT	EA	1
111	11	PADZZ	5305-00-889-3116	96906	MS35206-213	SCREW,MACHINE	EA	1
111	12	XDDZZ		80063	SM-D-421137	WIRING ASSY	EA	1
111	13	PADZZ	5955-00-853-5838	80063	SM-C-414968-10	CRYSTAL UNIT,QUARTZ 47.750000 MHZ FREQ	EA	1
111	14	PADZZ	5955-00-853-6533	80063	SM-C-414968-9	CRYSTAL UNIT,QUARTZ 47.650000 MHZ FREQ	EA	1
111	15	PADZZ	5955-00-853-6532	80063	SM-C-414968-8	CRYSTAL UNIT,QUARTZ 47.550000 MHZ FREQ	EA	1
111	16	PADZZ	5955-00-853-6372	80063	SM-C-414968-7	CRYSTAL UNIT,QUARTZ 47.450000 MHZ FREQ	EA	1
111	17	PADZZ	5955-00-853-6531	80063	SM-C-414968-6	CRYSTAL UNIT,QUARTZ 47.350000 MHZ FREQ	EA	1
111	18	XDDZZ		80063	SM-B-414434	INSULATOR,PLATE	EA	1
111	19	XDDDA		80063	SM-D-921138	SWITCH ASSY	EA	1
111	20	PADZZ	5955-00-985-8945	80063	SM-B-374951-2	CRYSTAL UNIT,QUARTZ 5600.000 KHZ FREQ	EA	1
111	21	PADDL		80063	SM-D-921132	REF OSC ASSY	EA	1
111	22	PADDL		80063	SM-D-921122	INTRPL OSC ASSY	EA	1
111	23	PADZZ	5305-00-762-7482	96906	MS35206-202	SCREW,MACHINE	EA	1
111	24	XDDZZ		80063	SM-B-414436	PLATE ASSY	EA	1
111	25	XDDZZ		80063	SM-C-414440	COVER ASSY	EA	1
111	26	PADZZ	5955-00-089-8584	80063	SM-B-374951-1	CRYSTAL UNIT 5650.000 KHZ FREQ	EA	1
111	27	PADZZ		80063	SM-D-414445	COVER	EA	1
111	28	XDDZZ		08544	SE23SL PL	EYELET,MTLC	EA	3
111	29	XDDZZ		80063	SM-B-414024	CLIP	EA	1
111	30	XDDZZ	5305-00-988-5747	83486	43-04-04120CD PL	SCREW,ASSEMBLED	EA	1
111	31	XDDZZ		78553	C-18695SS-012	FASTENER,SH SPR	EA	1
111	32	XDDZZ		80063	SM-C-414438	PLATE	EA	1
111	33	XDDZA		30817	97-110H	STRIP	EA	1
111	34	XDDZZ		80063	SM-D-414442	COVER	EA	1

LEGEND

REF DES	ITEM NO	REF DES	ITEM NO	REF DES	ITEM NO	REF DES	ITEM NO
C2001	1	C2005	4	L2001	6	R2002	9
C2002	1	J2001	5	Q2001	7	R2003	10
C2003	2	J2002	5	R2001	8	T2001	11
C2004	3						

PREFIX ALL REFERENCE DESIGNATIONS WITH A2000A

EL6JB209

Figure 112. Oscillator Subassembly, Interpolation Oscillator (Sheet 1 of 2).

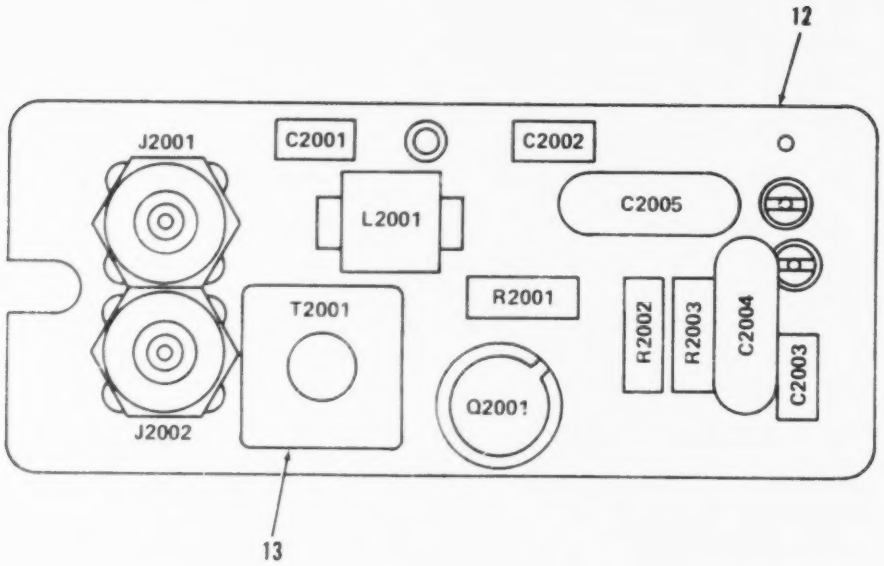

PREFIX ALL REFERENCE DESIGNATIONS WITH A2000A

EL6JB005

Figure 112. Oscillator Subassembly, Interpolation Oscillator (Sheet 2 of 2).

(1) ILLUSTRATION (a) FIG NO	(b) ITEM NO	(2) SMR CODE	(3) NATIONAL STOCK NUMBER	(4) FSCM	(5) PART NUMBER	(6) DESCRIPTION / USABLE ON CODE	(7) U/M	(8) QTY INC IN UNIT
						GROUP 01010201 OSCILLATOR SUBASSEMBLY		
						(INTERPOLATION OSC)		
						SM-D-414446 SM-D-921122		
112	1	PADZZ	5910-00-010-8715	81349	M39014/01-1569	CAPACITOR,CER DIEL	EA	2
112	2	PADZZ	5910-00-124-0659	81349	M39014/01-1575	CAPACITOR,FIXED,CER	EA	1
112	3	PADZZ	5910-01-043-6891	81349	CMR05E300G0DR	CAPACITOR,FIXED,MIC	EA	1
112	4	PADZZ	5910-01-044-5615	81349	CMR05E680G0DR	CAPACITOR,FIXED,MIC	EA	1
112	5	PADZA	5935-00-891-9159	05009	5023	CONNECTOR,RECEPTACL 1 PIN TYPE CONTACT,9.0 MILLIV MAX CONTACT RESISTANCE	EA	1
112	6	PADZZ	5950-00-891-9158	80063	SM-C-413577	COIL,RADIO,FREQUEN 1 MILLIH INDUCTANCE PORM 10 PCT	EA	1
112	7	PADZZ	5961-00-911-6015	81349	JAN2N3251A	TRANSISTOR	EA	1
112	8	PADZZ	5905-00-105-7764	81349	RCR07G222JS	RESISTOR,FIXED,COMP	EA	1
112	9	PADZZ	5905-00-141-0743	81349	RCR07G392JS	RESISTOR,FIXED,COMP	EA	1
112	10	PADZZ	5905-00-110-7622	81349	RCR07G682JS	RESISTOR,FIXED,COMP	EA	1
112	11	PADZZ		80063	SM-D-921128	TRANSFORMER ASSY,RF	EA	1
112	12	XADZZ		80063	SM-C-921125	CIRCUIT BD ASSY	EA	1
112	13	PADZZ		07047	A-10044DAP BLK	INSULATOR,DISK	EA	1

LEGEND

REF DES	ITEM NO	REF DES	ITEM NO	REF DES	ITEM NO	REF DES	ITEM NO
C2006	1	C2010	3	L2003	5	R2005	8
C2007	1	J2003	4	Q2002	6	R2006	9
C2008	1	L2002	5	R2004	7	T2002	10
C2009	2						

PREFIX ALL REFERENCE DESIGNATIONS WITH A2000A

EL6JB211

Figure 113. Oscillator Subassembly, Reference Oscillator (Sheet 1 of 2).

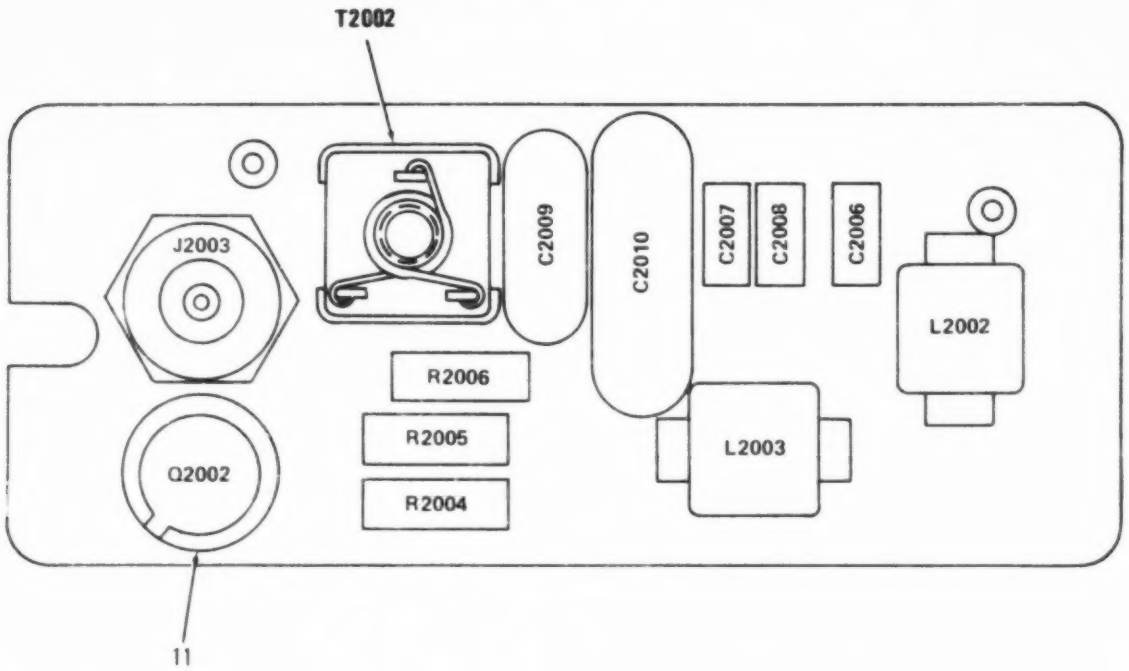

PREFIX ALL REFERENCE DESIGNATIONS WITH A2000A

EL6JB006

Figure 113. Oscillator Subassembly, Reference Oscillator (Sheet 2 of 2).

(1) ILLUSTRATION (a) FIG NO	(b) ITEM NO	(2) SMR CODE	(3) NATIONAL STOCK NUMBER	(4) FSCM	(5) PART NUMBER	(6) DESCRIPTION / USABLE ON CODE	(7) U/M	(8) QTY INC IN UNIT
						GROUP 0101020Z OSCILLATOR SUBASSEMBLY		
						(REFERENCE OSC)		
						SM-D-914456 SM-D-921132		
113	1	PADZZ	5910-00-124-0659	81349	M39014/01-1575	CAPACITOR,FIXED,CER	EA	3
113	2	PADZZ		81349	CMR05E620FPDM	CAPACITOR,MICA DIEL	EA	1
113	3	PADZZ	5910-01-029-3822	81349	CMR06F511GODR	CAPACITOR,FIXED,MIC	EA	1
113	4	PADZA	5935-00-891-9159	05009	5023	CONNECTOR,RECEPTACL 1 PIN TYPE CONTACT,9.0 MILLIV MAX CONTACT RESISTANCE	EA	1
113	5	PADZZ	5950-00-891-9158	80063	SM-C-413577	COIL,RADIO,FREQUEN 1 MILLIH INDUCTANCE,PORM 10 PCT	EA	2
113	6	PADZZ	5961-00-911-6015	81349	JAN2N3251A	TRANSISTOR	EA	1
113	7	PADZZ	5905-00-105-7764	81349	RCR07G222JS	RESISTOR,FIXED,COMP	EA	1
113	8	PADZZ	5905-00-141-0743	81349	RCR07G392JS	RESISTOR,FIXED,COMP	EA	1
113	9	PADZZ	5905-00-110-7622	81349	RCR07G682JS	RESISTOR,FIXED,COMP	EA	1
113	10	PADZZ		80063	SM-D-921136	TRANSFORMER ASSY,RF	EA	1
113	11	PADZZ		07047	A-10044DAP BLK	INSULATOR,DISK	EA	1

457/1458 BLANK

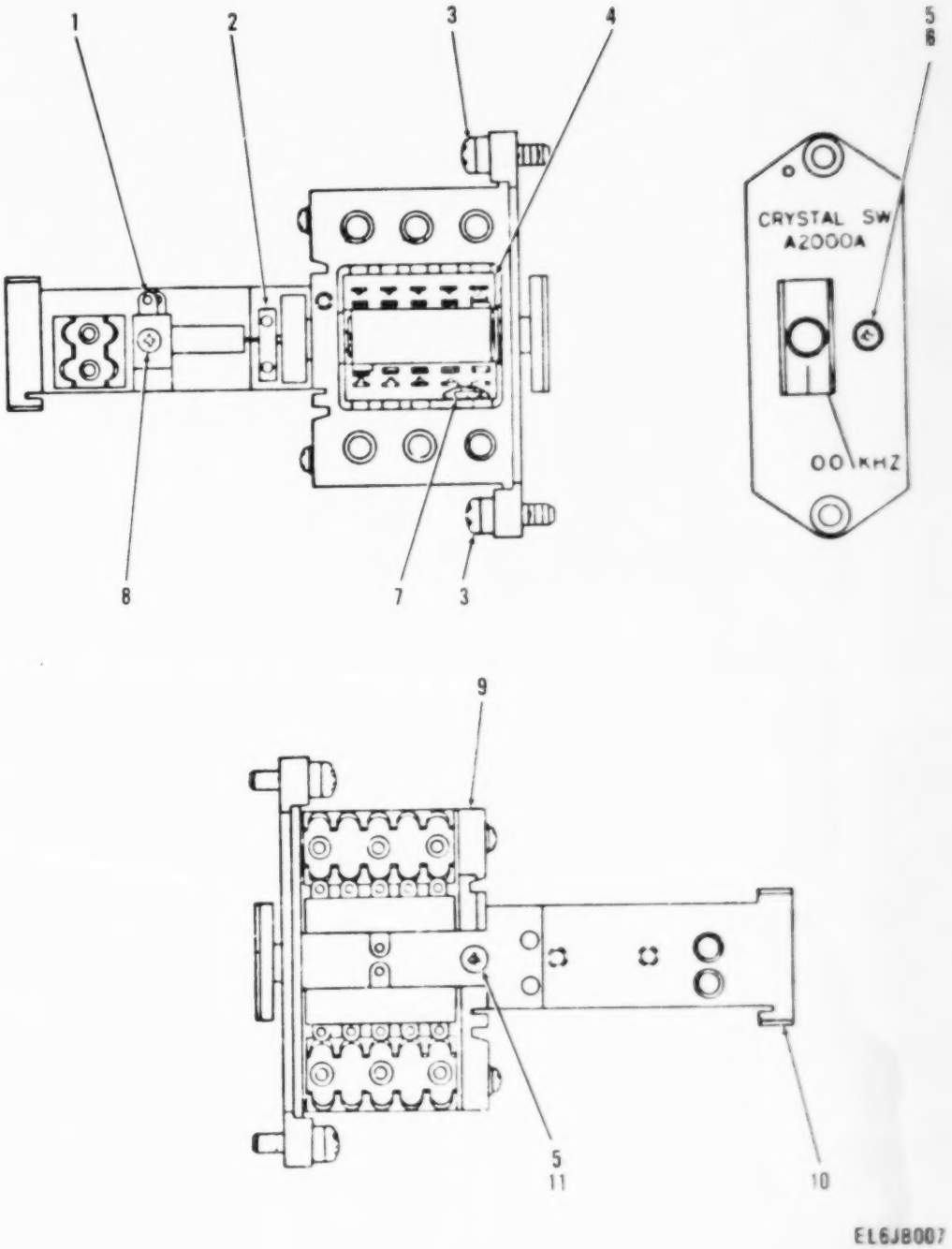

Figure 114. Switch Assembly (Sheet 1 of 2).

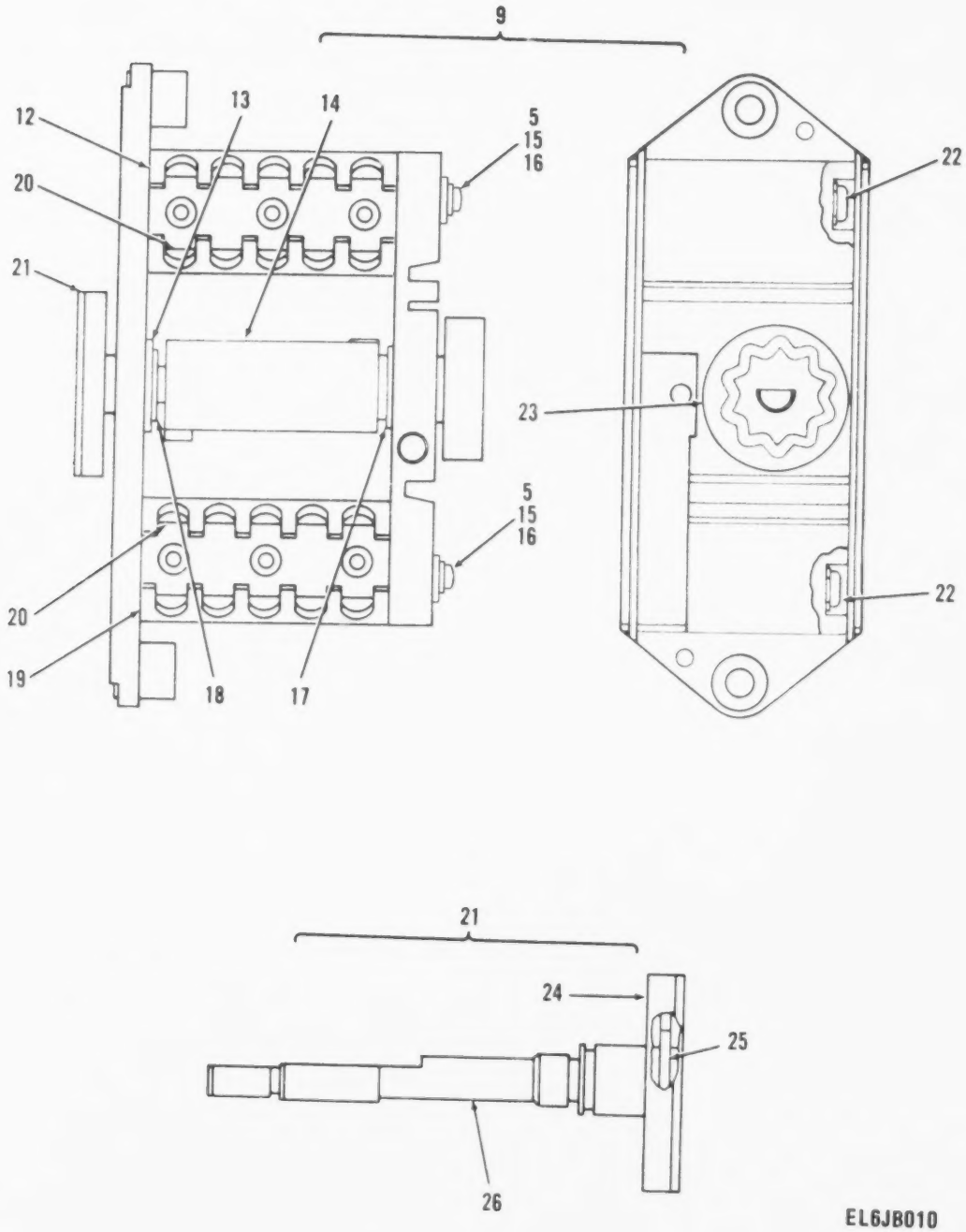

Figure 114. Switch Assembly (Sheet 2 of 2).

(1) ILLUSTRATION (a) FIG NO	(1) ILLUSTRATION (b) ITEM NO	(2) SMR CODE	(3) NATIONAL STOCK NUMBER	(4) FSCM	(5) PART NUMBER	(6) DESCRIPTION / USABLE ON CODE	(7) U/M	(8) QTY INC IN UNIT
						GROUP 01010203 SWITCH ASSY		
						SM-D-414463		
						SM-D-921138 (A-MDL)		
114	1	PADZA		43710	921139	SWITCH	EA	1
114	2	PADZZ		80063	SM-C-921147	ACTUATOR ASSY	EA	1
114	3	PADZZ	5305-00-853-6513	80063	SM-C-413531-10	SCREW,EXTERNALLY	EA	2
114	4	PADZA		43710	921140	CONTROL	EA	2
114	5	PADZZ	5310-00-543-5060	96906	MS35338-39	WASHER,LOCK	EA	2
114	6	PADZZ	5305-00-762-7482	96906	MS35206-202	SCREW,MACHINE	EA	1
114	7	PADZZ	5305-00-988-1167	96906	MS35206-204	SCREW,MACHINE	EA	4
114	8	PADZZ	5305-00-983-6730	96906	MS35206-218	SCREW,MACHINE	EA	1
114	9	XDDDD		80063	SM-D-921142	BASE FRAME ASSY	EA	1
114	10	XDDZZ		80063	SM-C-921141	BAR FRAME ASSY	EA	1
114	11	PADZZ	5305-00-988-1167	96906	MS35206-204	SCREW,MACHINE	EA	1
114	12	XDDZZ		80063	SM-C-414483-1	HOLDER	EA	1
114	13	XDDZZ		38443	FC-1624-FF	BEARING,BALL	EA	1
114	14	PADZZ		80063	SM-C-414475	CAM	EA	1
114	15	PADZZ	5940-00-828-8247	98278	754	TERMINAL,LUG	EA	2
114	16	PADZZ	5305-00-889-3118	96906	MS35206-203	SCREW,MACHINE	EA	2
114	17	XDDZZ		38443	FC-1220-FF	BEARING,BALL	EA	1
114	18	PADZZ	5365-00-550-5937	79136	5103-25-H	RING,RETAINING	EA	1
114	19	XDDZZ		80063	SM-C-414483-2	HOLDER	EA	1
114	20	XDDZZ		80063	SM-C-414484	SPRING	EA	2
114	21	PADZZ		80063	SM-C-414486	SHAFT ASSY	EA	1
114	22	XDDZZ		08544	SE36CD PL	EYELET,MTLC	EA	3
114	23	PADZZ	5930-00-858-6531	80063	SM-C-414476	CAM,CONTROL	EA	1
114	24	XDDZZ		80063	SM-C-414489	COUPLER	EA	1
114	25	PADZZ		96906	MS171434	PIN,SPRING	EA	1
114	26	XDDZZ		80063	SM-C-414488	SHAFT,SHLDR	EA	1

461/1462 BLANK)

LEGEND

REF DES	ITEM NO	REF DES	ITEM NO	REF DES	ITEM NO	REF DES	ITEM NO
CR6301	1	C6308	7	J6002	13	R6302	21
CR6302	1	C6309	3	L6301	14	R6303	22
C6301	2	C6310	8	L6302	15	R6304	22
C6302	3	C6311	9	L6303	16	R6305	23
C6303	3	C6312	10	L6304	17	R6306	24
C6304	3	C6313	11	L6305	18	R6307	25
C6305	4	C6314	11	Q6301	19	R6308	26
C6306	5	C6315	12	R6301	20	S6301	27
C6307	6						

EL6JB113

Figure 115. Electronic Component Assembly, Oscillator Assembly (Sheet 1 of 4).

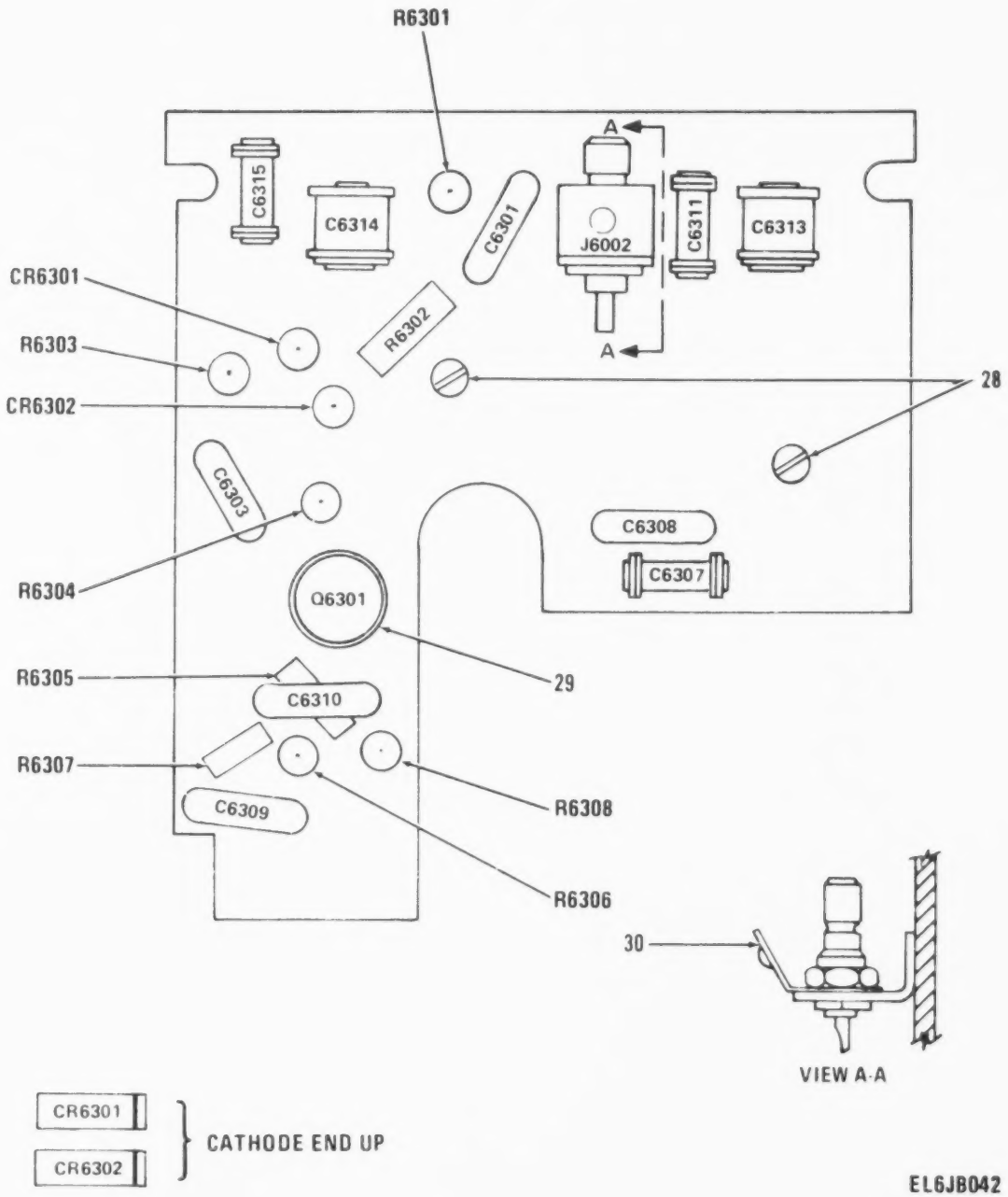

Figure 115. Electronic Component Assembly, Oscillator Assembly (Sheet 2 of 4).

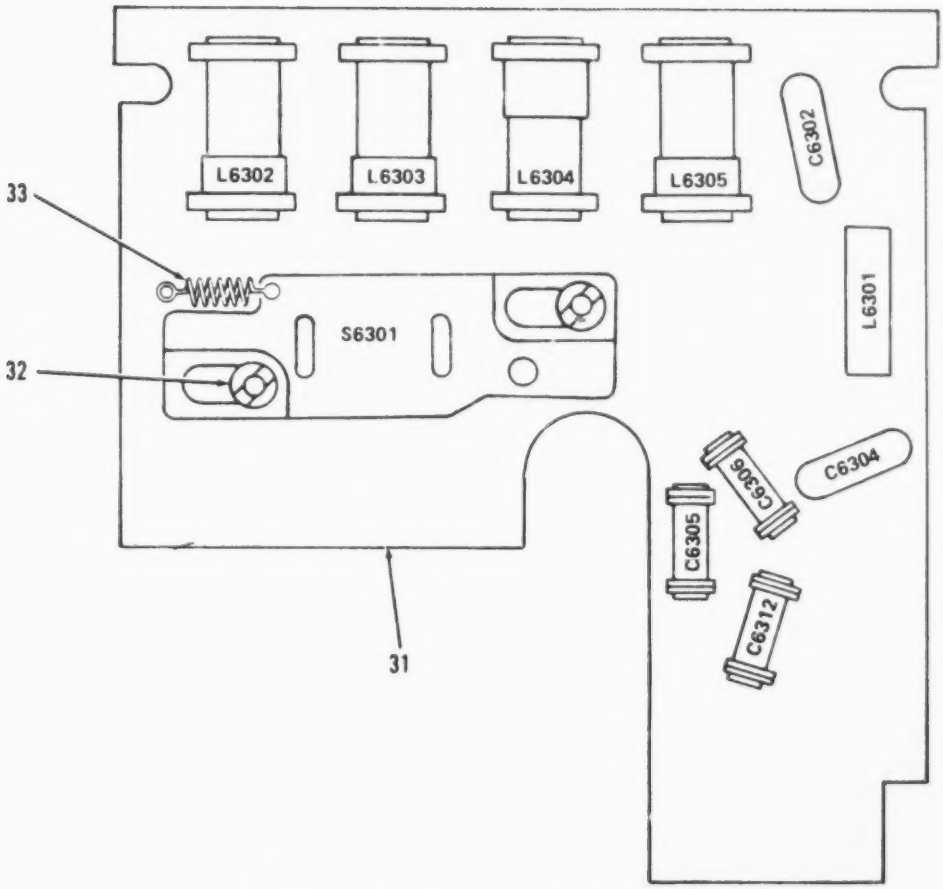

Figure 115. Electronic Component Assembly, Oscillator Assembly (Sheet 3 of 4).

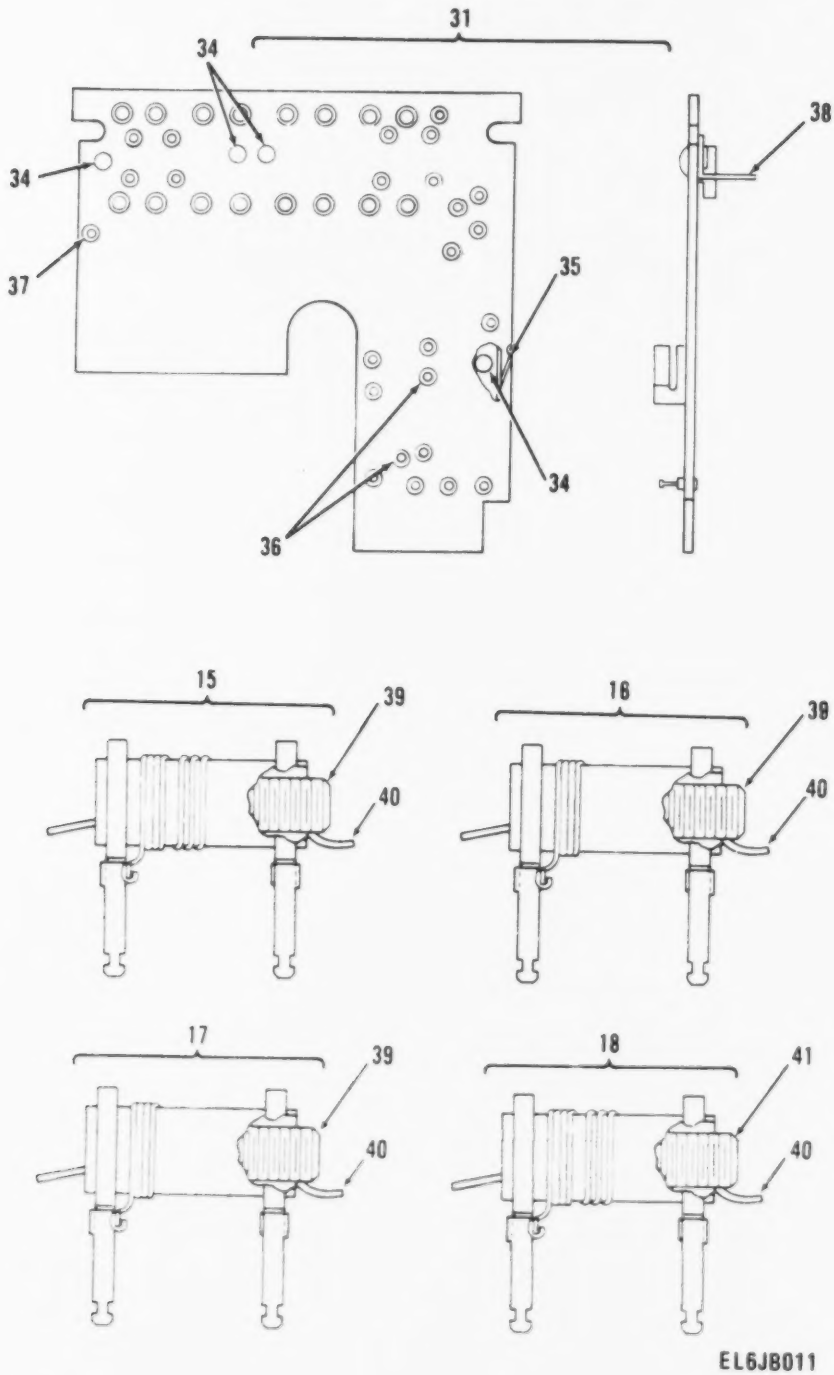

Figure 115. Electronic Component Assembly, Oscillator Assembly (Sheet 4 of 4).

(1) ILLUSTRATION (a) FIG NO	(1) ILLUSTRATION (b) ITEM NO	(2) SMR CODE	(3) NATIONAL STOCK NUMBER	(4) FSCM	(5) PART NUMBER	(6) DESCRIPTION USABLE ON CODE	(7) U/M	(8) QTY INC IN UNIT
						GROUP 01010302 ELECTRONIC COMPONENT (OSCILLATOR ASSY) A6300 AND A6300A SM-D-374993		
115	1	PADZZ	5961-00-938-5250	16352	1N3551	SEMICONDUCTOR DEVIC	EA	2
115	2	PADZZ	5910-01-044-5615	81349	CMR05E680GODR	CAPACITOR,FIXED,MIC	EA	1
115	3	PADZZ	5910-00-938-7506	18796	0801011X5F0 102K	CAPACITOR,FIXED,CER .001 UF,PORM 10 PCT,500 VDCW	EA	9
115	4	PADZZ	5910-00-681-7617	81349	CC22CK020C	CAPACITOR,FIXED,CER	EA	1
115	5	PADZZ	5910-00-806-0668	81349	CC22CH7R0D	CAPACITOR,FIXED,CER	EA	1
115	6	PADZZ	5910-00-938-7517	72982	301655P2G0170G	CAPACITOR,FIXED,CER 17.0 UUF,PORM 2 PCT,500 VDCW,N150 TEMP COEF	EA	1
115	7	PADZZ		81349	CMR05E560GGDL	CAPACITOR,MICA DIEL	EA	1
115	8	PADZZ	5910-01-030-1770	81349	CMR05F151GODR	CAPACITOR,FIXED,MIC	EA	1
115	9	PADZZ	5910-00-938-7518	72982	301-011P3K02598	CAPACITOR,FIXED,CER 1 UUF,PORM .1 UUF,500 VDCW,NPO TEMP COEF	EA	1
115	10	PADZZ	5910-00-702-9790	81349	CC22UJ080C	CAPACITOR,FIXED,CER	EA	1
115	11	PADZZ	5910-00-924-4307	81349	PC51J5R5	CAPACITOR,VARIABLE,	EA	2
115	12	PADZZ		81349	CC20TH120G	CAPACITOR,CER DIEL	EA	1
115	13	PADZZ		02660	27-3	CONNECTOR,RFCEPTACL 50 OHMS NOMINAL IMPEDANCE	EA	1
115	14	PADZZ		97469	10128-45	COIL,RF 2.9 UH PORM 3 PCT INDUCTANCE AT 7.9 MHZ	EA	1
115	15	PADDD	5950-01-013-0280	80063	SM-C-416332	COIL,RADIO FREQUENC 0.620 UH MIN,0.760 UH MAX INDUCTANCE AT 25 MHZ	EA	1
115	16	PADDD	5950-01-098-7909	80063	SM-C-416321-2	COIL,RADIO FREQUENC .127 UH MIN,.143 UH MAX INDUCTANCE AT 25 MHZ	EA	1
115	17	PADDD	5950-01-011-4248	80063	SM-C-416352-1	COIL,RADIO FREQUENC .150 UH MIN,.170 UH MAX INDUCTANCE AT 25 MHZ	EA	1
115	18	PADDD	5950-01-012-1369	80063	SM-C-416327-2	COIL,RADIO FREQUENC 15.0 UH MIN,21.0 UH MAX INDUCTANCE AT 2.5 MHZ	EA	1
115	19	PADZZ		80063	SM-A-921102	TRANSISTOR	EA	1
115	20	PADZZ	5905-00-116-8554	81349	RCR07G105JS	RESISTOR,FIXED,COMP	EA	1
115	21	PADZZ	5905-00-111-1679	81349	RCR07G512JS	RESISTOR,FIXED,COMP	EA	1
115	22	PADZZ	5905-00-141-0717	81349	RCR07G473JS	RESISTOR,FIXED,COMP	EA	2
115	23	PADZZ	5905-00-110-7620	81349	RCR07G102JS	RESISTOR,FIXED,COMP	EA	1
115	24	PADZZ	5905-00-114-5343	81349	RCR07G182JS	RESISTOR,FIXED,COMP	EA	1
115	25	PADZZ	5905-00-126-6683	81349	RCR07G332JS	RESISTOR,FIXED,COMP	EA	1
115	26	PADZZ	5905-00-111-4734	81349	RCR20G470JS	RESISTOR,FIXED,COMP	EA	1
115	27	PADZA	5821-00-990-6461	80063	SM-C-416300	SWITCH SUBASSEMBLY	EA	1
115	28	PADZZ	5305-00-137-7929	80063	SM-B-416363	SCREW,SELF-LOCKING	EA	2
115	29	PADZZ		07047	A-10044DAP BLK	INSULATOR,DISK	EA	1
115	30	PADZA		80063	SM-C-374866	CONTACT,ELEC	EA	1
115	31	XDDDA		80063	SM-D-416395	OSCILLATOR BD ASSY	EA	1
115	32	PADZZ		80063	SM-B-416361	PIN	EA	2
115	33	XDDZZ		80063	SM-B-481749	SPRING,HELICAL	EA	1
115	34	PADZZ	5320-00-081-7418	96906	MS16535-12	RIVET,TUBULAR	EA	2

(1) ILLUSTRATION (a) FIG NO	(1) ILLUSTRATION (b) ITEM NO	(2) SMR CODE	(3) NATIONAL STOCK NUMBER	(4) FSCM	(5) PART NUMBER	(6) DESCRIPTION USABLE ON CODE	(7) U/M	(8) QTY INC IN UNIT
115	35	XDDZA		80063	SM-8-416339-1	CONTACT,ELEC	EA	2
115	36	PADZZ	5940-00-082-5002	81349	SE16XC01	TERMINAL,STUD	EA	2
115	37	XDDZZ		71279	3653-2-01	TERMINAL,STUD	EA	1
115	38	XDDZZ		80063	SM-8-416356-1	BRACKET	EA	1
115	39	PAFZZ	5950-00-170-4153	95566	FB0460-1810-0	CORE,ADJUSTABLE TUN	EA	1
115	40	PAFZZ		80063	SM-8-481760	STRIP,PLASTIC	EA	1
115	41	PAFZZ	5950-00-904-1057	71279	3226-3	CORE,ADJUSTABLE TUN	EA	1

LEGEND

REF DES	ITEM NO	REF DES	ITEM NO	REF DES	ITEM NO	REF DES	ITEM NO
C6401	1	C6409	6	L6404	13	R6406	19
C6402	2	C6410	8	L6405	14	R6407	20
C6403	3	J6001	9	Q6401	15	R6408	16
C6404	4	J6003	9	Q6402	15	R6409	21
C6405	5	L6401	10	R6401	16	R6410	22
C6406	6	L6402	11	R6402	17	S6401	23
C6407	7	L6403	12	R6403	18	T6401	24
C6408	8						

EL6JB114

Figure 116. P ffer Board (Sheet 1 of 4).

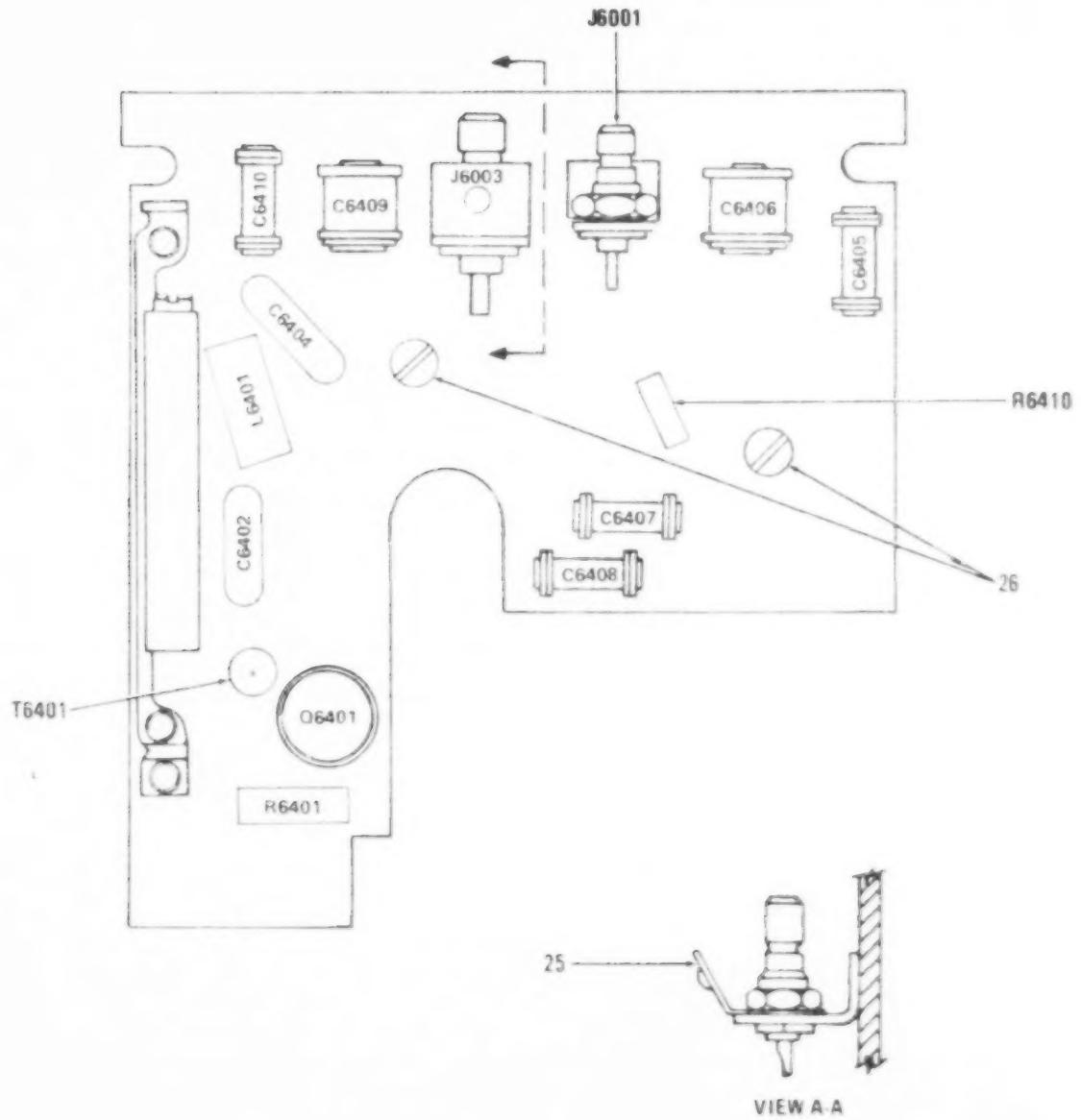

Figure 116. Buffer Board (Sheet 2 of 4).

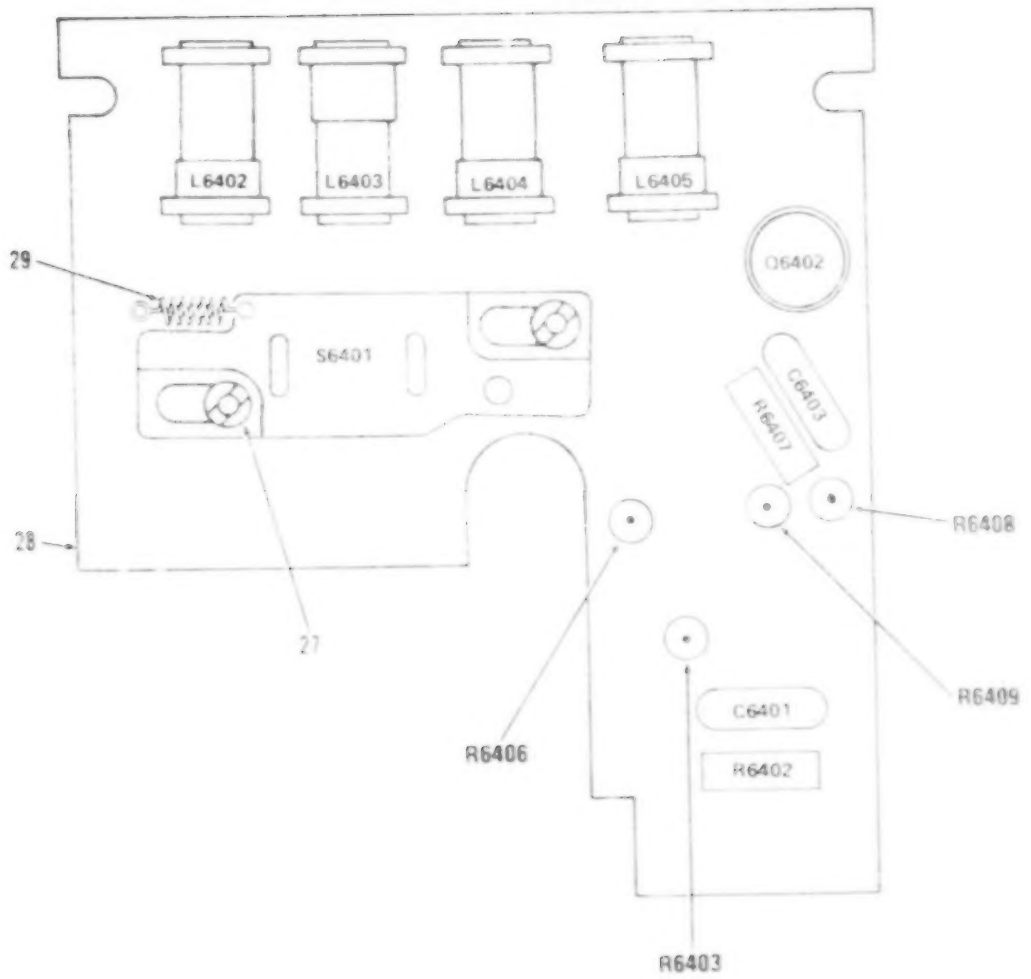

Figure 116. Buffer Board (Sheet 3 of 4).

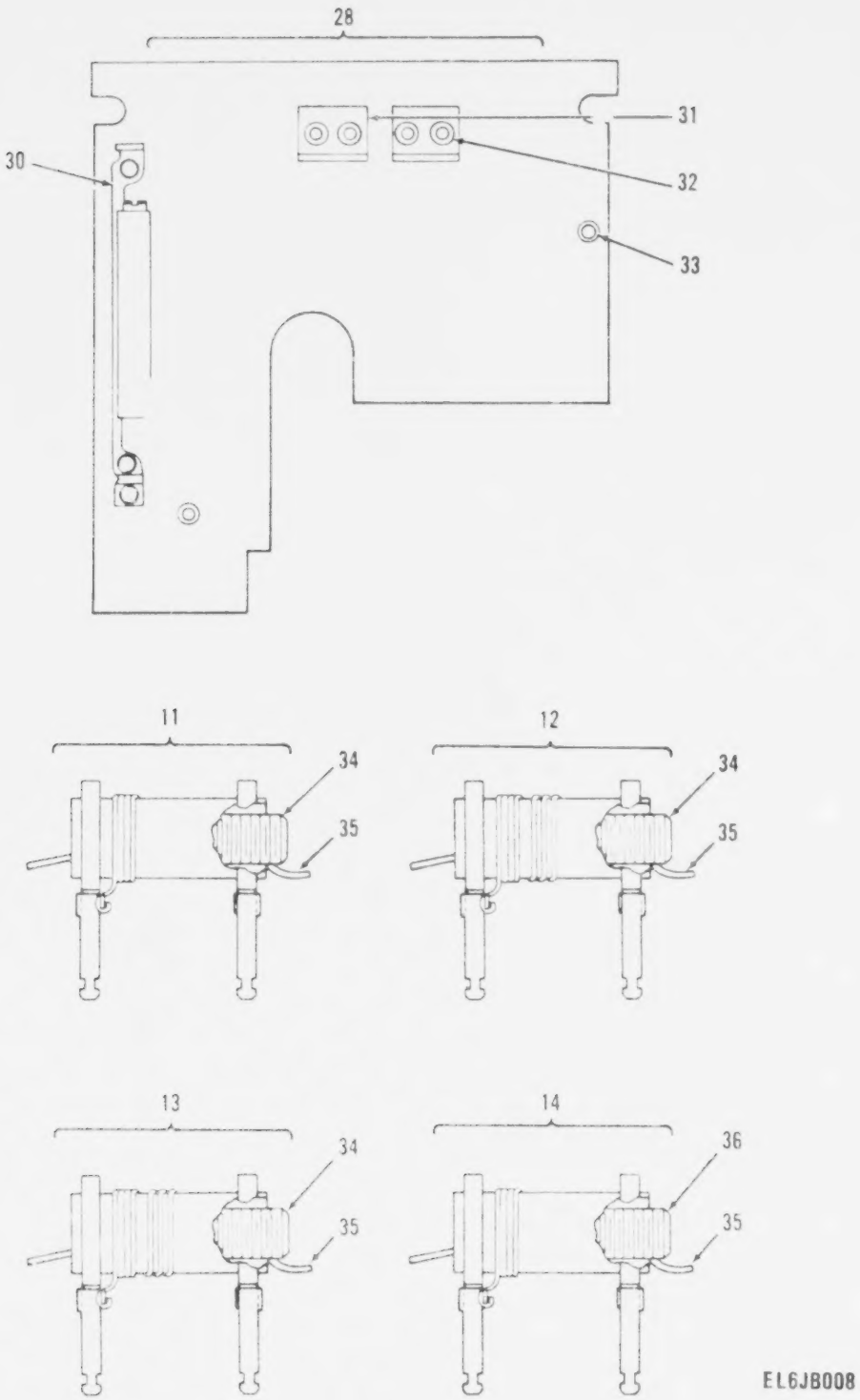

Figure 116. Buffer Board (Sheet 4 of 4).

best copy available

(1) ILLUSTRATION (a) FIG NO	(1) ILLUSTRATION (b) ITEM NO	(2) SMR CODE	(3) NATIONAL STOCK NUMBER	(4) FSCM	(5) PART NUMBER	(6) DESCRIPTION USABLE ON CODE	(7) U/M	(8) QTY INC IN UNIT
						GROUP 01010303 BUFFER BOARD		
						A6400 AND A6400A		
						SM-D-374996		
116	1	PADZZ	5910-00-464-8946	72982	855-027-X5T0472M	CAPACITOR,FIXED,CER .0047 UF PORM 20 PCT,200 VDCW	EA	1
116	2	PADZZ	5910-01-044-5615	81349	CMR05E680GODR	CAPACITOR,FIXED,MIC	EA	1
116	3	PADZZ	5910-00-938-7506	18796	0801011X5F0 102K	CAPACITOR,FIXED,CER .001 UF,PORM 10 PCT,500 VDCW	EA	1
116	4	PADZZ	5910-01-043-6892	81349	CM105F101GODR	CAPACITOR,FIXED,MIC	EA	1
116	5	PADZZ	5910-00-583-1589	81349	CC20CH040C	CAPACITOR,FIXED,CER	EA	1
116	6	PADZZ	5910-00-924-4307	81349	PC51J5R5	CAPACITOR,VARIABLE,	EA	2
116	7	PADZZ	5910-00-726-8695	81349	CC22CH100C	CAPACITOR,FIXED,CER	EA	1
116	8	PADZZ	5910-00-615-9452	81349	CC22CH180G	CAPACITOR,FIXED,CER	EA	2
116	9	PADZZ		02660	27-3	CONNECTOR,RECEPTACL 50 OHMS NOMINAL IMPEDANCE	EA	2
116	10	PADZZ	5950-00-964-7450	96906	MS75008-33	COIL,RADIO FREQUENC	EA	1
116	11	PADDD	5950-01-013-0290	80063	SM-C-416332	COIL,RADIO FREQUENC 0.620 UH MIN,0.760 UH MAX INDUCTANCE AT 25 MHZ	EA	1
116	12	PADDD	5950-01-098-7909	80063	SM-C-416321-2	COIL,RADIO FREQUENC .127 UH MIN,.143 UH MAX INDUCTANCE AT 25 MHZ	EA	1
116	13	PADDD	5950-01-011-4249	80063	SM-C-416352-2	COIL,RADIO FREQUENC 0.164 UH MIN,0.188 UH MAX INDUCTANCE AT 25 MHZ	EA	1
116	14	PADDD	5950-01-011-4808	80063	SM-C-416327-3	COIL,RADIO FREQUENC 3.4 UH MIN,4.35 UH MAX INDUCTANCE AT 7.9 MHZ	EA	1
116	15	PADZZ		80063	SM-A-921385	TRANSISTOR	EA	2
116	16	PADZZ	5905-00-114-5343	81349	RCR07G182JS	RESISTOR,FIXED,COMP	EA	2
116	17	PADZZ	5905-00-105-7764	81349	RCR07G222JS	RESISTOR,FIXED,COMP	EA	1
116	18	PADZZ	5905-00-114-0710	81349	RCR07G331JS	RESISTOR,FIXED,COMP	EA	1
116	19	PADZZ	5905-00-106-3668	81349	RCR07G270JS	RESISTOR,FIXED,COMP	EA	1
116	20	PADZZ	5905-00-135-3973	81349	RCR07G221JS	RESISTOR,FIXED,COMP	EA	1
116	21	PADZZ	5905-00-126-6683	81349	RCR07G332JS	RESISTOR,FIXED,COMP	EA	1
116	22	PADZZ	5905-00-113-4860	81349	RCR07G270JS	RESISTOR,FIXED,COMP	EA	1
116	23	PADZA	5821-00-990-6461	80063	SM-C-416300	SWITCH SUBASSEMBLY	EA	1
116	24	PADZZ	5950-01-011-3415	80063	SM-C-416400	TRANSFORMER,RADIO F	EA	1
116	25	PADZA		80063	SM-C-374866	CONTACT,ELEC	EA	1
116	26	PADZZ	5305-00-137-7929	80063	SM-B-416363	SCREW,SELF-LOCKING	EA	2
116	27	PADZZ		80063	SM-B-416361	PIN	EA	2
116	28	XDDDA		80063	SM-D-374995	BUFFER BOARD ASSY	EA	1
116	29	XDDZZ		80063	SM-B-481749	SPRING,HELICAL	EA	1
116	30	XDDZZ		80063	SM-C-416404	BRACKET	EA	1
116	31	XDDZZ		80063	SM-B-416356-1	BRACKET	EA	2
116	32	PADZZ	5320-00-081-7418	96906	MS16535-12	RIVET,TUBULAR	EA	4
116	33	XDDZZ		71279	3653-2-01	TERMINAL,STUD	EA	1
116	34	PAFZZ	5950-00-170-4153	95566	FB0460-1810-0	CORE,ADJUSTABLE TUN	EA	1
116	35	PAFZZ		80063	SM-B-481760	STRIP,PLASTIC	EA	1

(1) ILLUSTRATION (A) FIG NO	(1) ILLUSTRATION (B) ITEM NO	(2) SMR CODE	(3) NATIONAL STOCK NUMBER	(4) FSCM	(5) PART NUMBER	(6) DESCRIPTION USABLE ON CODE	(7) U/M	(8) QTY INC IN UNIT
116	36	PAFZZ	5950-00-904-1057	71279	3226-3	CORE,ADJUSTABLE TUN.....	EA	1

LEGEND

REF DES	ITEM NO.	REF DES	ITEM NO.	REF DES	ITEM NO.	REF DES	ITEM NO.
CR7201	23	C7202	27	Q7203	31	R7205	35
CR7202	23	C7204	26	Q7204	31	R7206	36
CR7203	24	C7205	28	R7201	32	R7208	35
CR7204	24	C7206	29	R7203	33	R7209	34
CR7205	25	C7207	30	R7204	34	R7210	37
C7201	26						

EL6JB087

Figure 117. Amplifier, Synchro (Sheet 1 of 4).

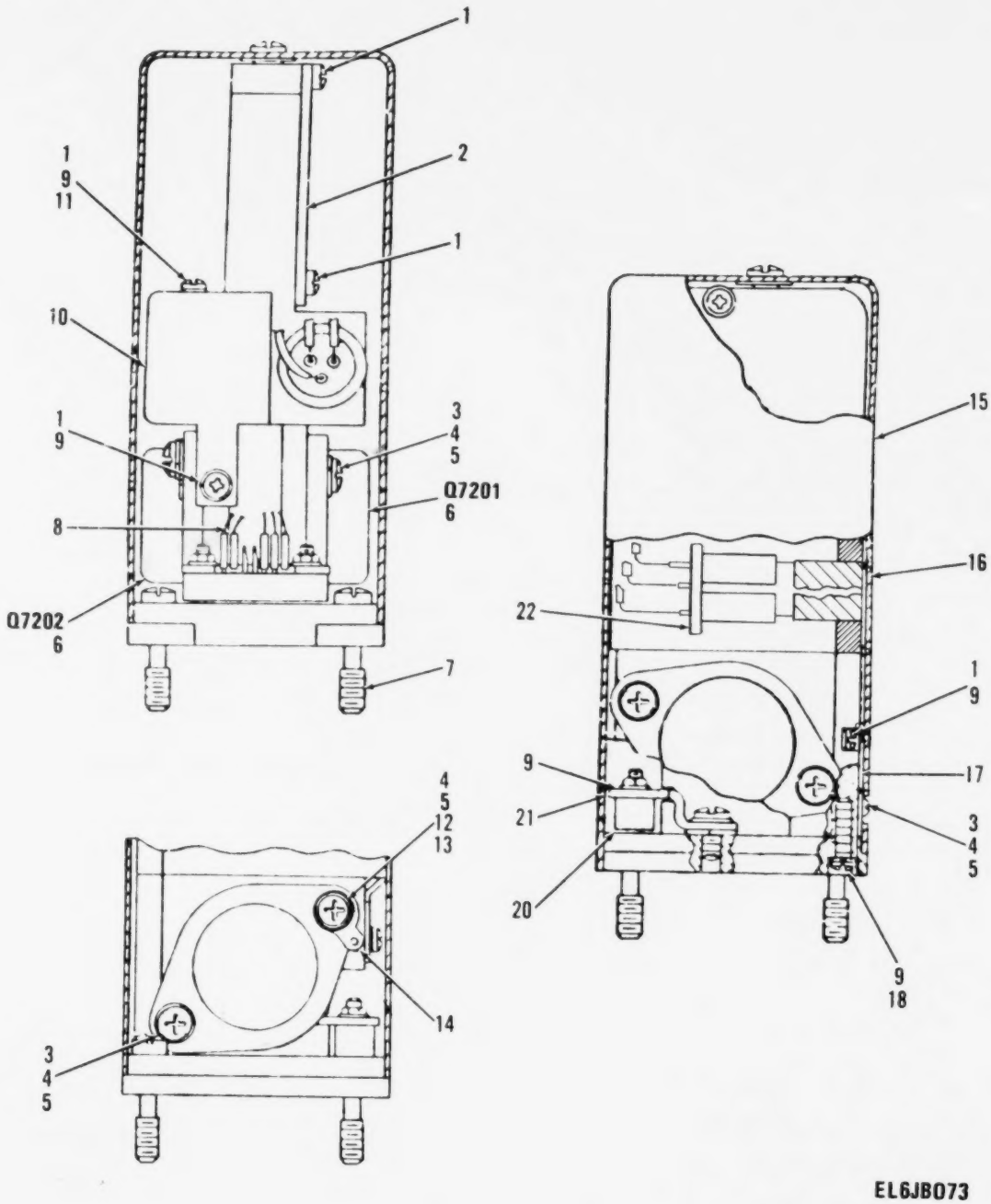

Figure 117. Amplifier, Synchro (Sheet 2 of 4).

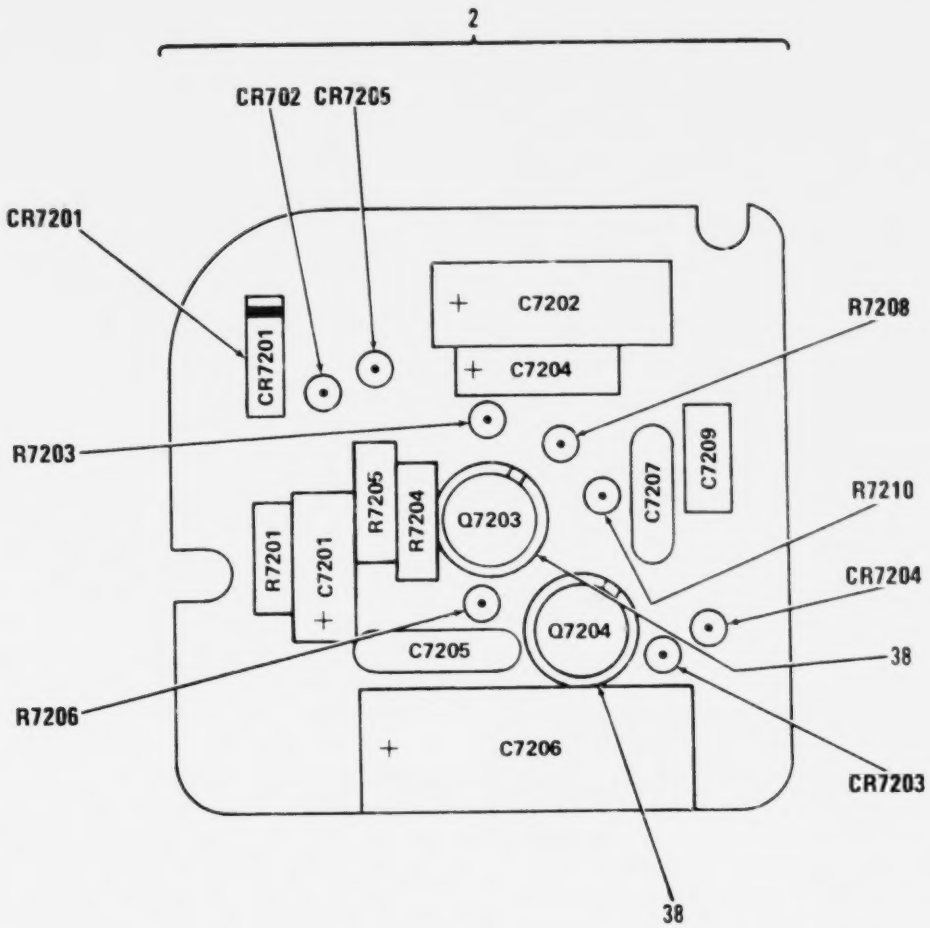

CR2702	CATHODE END, UP.
CR7203	CATHODE END, UP.
CR7204	CATHODE END, UP.
CR7205	CATHODE END, DOWN.

EL6JB085

Figure 117. Amplifier, Synchro (Sheet 3 of 4).

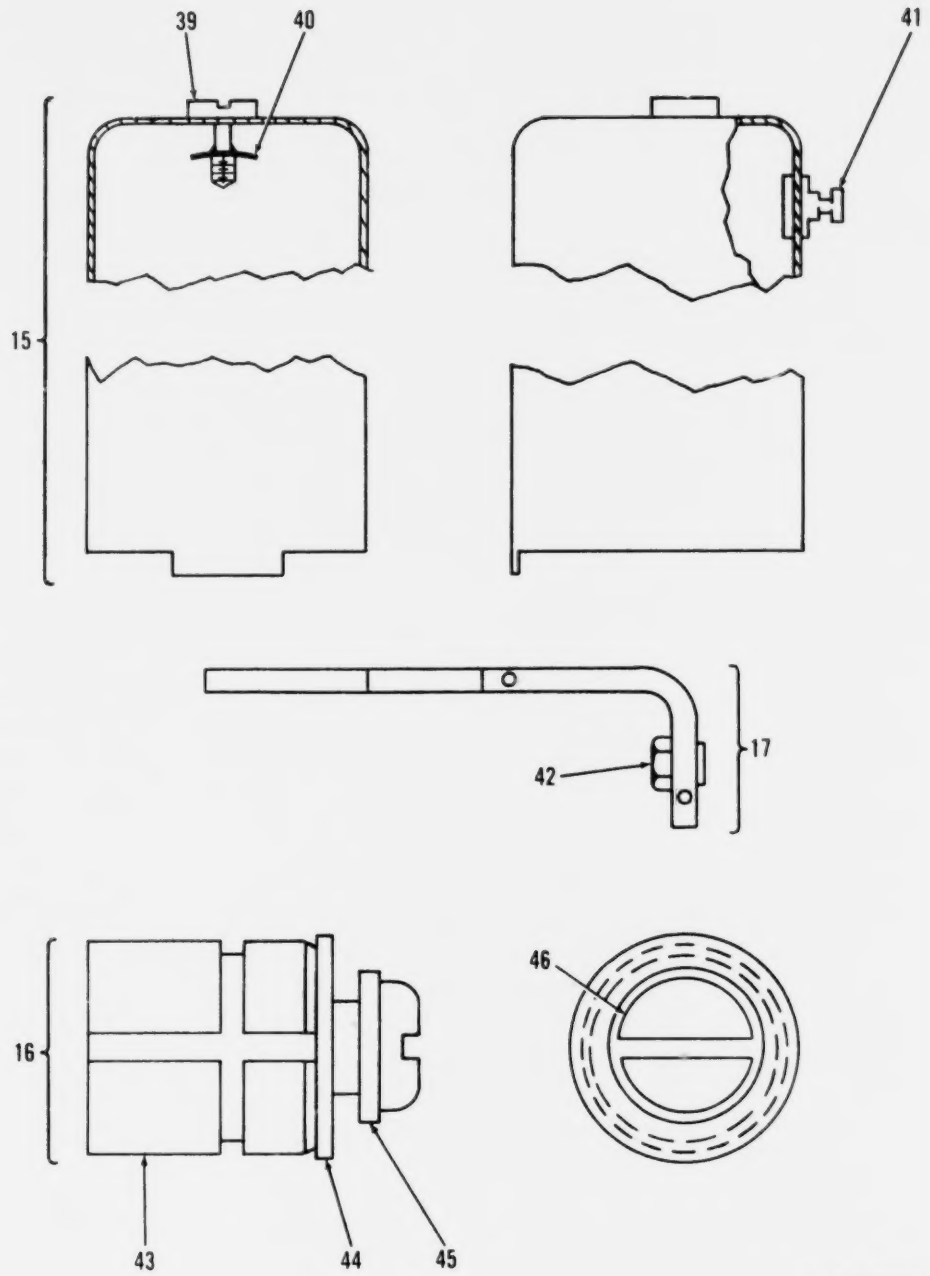

Figure 117. Amplifier, Synchro (Sheet 4 of 4).

(1) ILLUSTRATION (a) FIG NO	(1) ILLUSTRATION (b) ITEM NO	(2) SMR CODE	(3) NATIONAL STOCK NUMBER	(4) FSCM	(5) PART NUMBER	(6) DESCRIPTION USABLE ON CODE	(7) U/M	(8) QTY INC IN UNIT
						GROUP 010106 AMPLIFIER,SYNCHRO		
						A7200A SM-D-921412		
117	1	PADZZ	5305-00-889-3118	96906	MS35206-203	SCREW,MACHINE	EA	2
117	2	XADDD		80063	SM-D-921413	AMPLIFIER ELEC ASSY	EA	1
117	3	PADZZ	5305-00-993-0190	96906	MS35206-214	SCREW,MACHINE	EA	1
117	4	PADZZ	5310-00-543-2410	96906	MS35338-40	WASHER,LOCK	EA	2
117	5	PADZZ	5310-00-057-0573	80205	NAS620C4	WASHER,FLAT	EA	4
117	6	PADZZ		80063	SM-A-921171	TRANSISTOR	EA	2
117	7	PAFZZ	5305-00-139-7008	80063	SM-C-413884-5	SCREW,EXTERNALLY RE	EA	2
117	8	XDDZZ		80063	SM-D-921421	SERVO AMPL WRG ASSY	EA	1
117	9	PADZZ	5310-00-543-5060	96906	MS35338-39	WASHER,LOCK	EA	2
117	10	PADZZ	5950-01-013-4181	80063	SM-D-414743	REACTOR-TRANSFORMER 40VDCW,0 MILLIA PRIMARY RATING,175VDCW, 28MILLIA EA HALF SEC	EA	1
117	11	PADZZ	5310-00-576-0900	80205	NAS620-3L	WASHER,FLAT	EA	1
117	12	PADZZ	5310-00-616-3554	96906	MS35335-29	WASHER,LOCK	EA	1
117	13	PADZZ	5305-00-889-2997	96906	MS35206-215	SCREW,MACHINE	EA	1
117	14	PADZZ	5940-00-177-7974	96906	MS77070-1	TERMINAL,LUG	EA	1
117	15	XDDDD		80063	SM-C-414759	COVER ASSY	EA	1
117	16	XDDDD		80063	SM-C-921425	HEAT SINK ASSY	EA	1
117	17	XDDDD		80063	SM-B-921417	BRACKET ASSY	EA	1
117	18	PADZZ	5305-00-989-0682	96906	MS35206-205	SCREW,MACHINE	EA	1
117	19	XDDZZ		80063	SM-D-414744	BASE	EA	1
117	20	PADZZ	5935-00-948-5867	97954	SMI7MDM70	CONNECTOR,RECEPTACL 7 PIN TYPE CONTACTS	EA	1
117	21	XDDZZ		80063	SM-C-414747	BRACKET	EA	1
117	22	PADZZ	5961-00-949-1440	81349	JANZN2905A	TRANSISTOR	EA	1
117	23	PADZZ	5961-00-938-1135	81349	JAN1N4148	SEMICOND DVC DIODE	EA	2
117	24	PADZZ	5961-00-087-6047	81349	JAN1N645	SEMICONDUCTOR DEVIC	EA	2
117	25	PADZZ	5961-00-846-9157	81349	JAN1N759A	SEMICONDUCTOR DEVIC	EA	1
117	26	PADZZ	5910-00-185-9045	81349	M39003/01-3000	CAPACITOR,FIXED,ELE	EA	2
117	27	PADZZ	5910-00-113-5475	81349	M39003/01-3006	CAPACITOR,FIXED,ELE	EA	1
117	28	PADZZ	5910-00-857-5305	18796	855-222X5S0-103M	CAPACITOR,FIXED,CER .01 UF,PORM 20 PCT,100 VDCW	EA	1
117	29	PADZZ	5910-00-144-4383	81349	M39003/01-3026	CAPACITOR,FIXED,ELE	EA	1
117	30	PADZZ	5910-00-890-0554	80063	SM-C-413567-3	CAPACITOR,FIXED,CER .0047UF,PORM 20 PCT,100VDCW	EA	1
117	31	PADZZ	5961-00-951-8757	81349	JANZN2222A	TRANSISTOR	EA	2
117	32	PADZZ	5905-00-131-1255	81349	RCR07G122JS	RESISTOR,FIXED,COMP	EA	1
117	33	PADZZ	5905-00-135-3975	81349	RCR07G680JS	RESISTOR,FIXED,COMP	EA	1
117	34	PADZZ	5905-00-141-0744	81349	RCR07G562JS	RESISTOR,FIXED,COMP	EA	2
117	35	PADZZ	5905-00-116-8556	81349	RCR07G223JS	RESISTOR,FIXED,COMP	EA	2
117	36	PADZZ	5905-00-141-0743	81349	RCR07G392JS	RESISTOR,FIXED,COMP	EA	1
117	37	PADZZ	5905-00-141-0742	81349	RCR07G181JS	RESISTOR,FIXED,COMP	EA	1

(1) ILLUSTRATION (a) FIG NO	(1) ILLUSTRATION (b) ITEM NO	(2) SMR CODE	(3) NATIONAL STOCK NUMBER	(4) FSCM	(5) PART NUMBER	(6) DESCRIPTION USABLE ON CODE	(7) U/M	(8) QTY INC IN UNIT
117	38	PAOZZ	5970-00-989-8333	07047	A-10042	INSULATOR,DISK	EA	2
117	39	PAOZZ	5305-00-139-7013	80063	SM-C-413531-7	SCREW,EXTERNALLY	EA	1
117	40	PAOZZ		78553	C-18695SS-012	FASTENER,SH SPR	EA	1
117	41	XOOZZ		80063	SM-B-414762	TERMINAL,STUD	EA	1
117	42	XOOZZ		30655	22NC6-40	NUT,CLINCH	EA	1
117	43	XOOZZ		80063	SM-C-481755-1	BODY	EA	1
117	44	PAOZZ		13103	B375-120-30	INSULATOR,WASHER	EA	1
117	45	XOOZZ		80063	SM-C-481755-2	WASHER,SHLD	EA	1
117	46	PAOZZ	5305-00-833-8615	96906	MS18212-12	SCREW,MACHINE	EA	1

480/(481 BLANK)

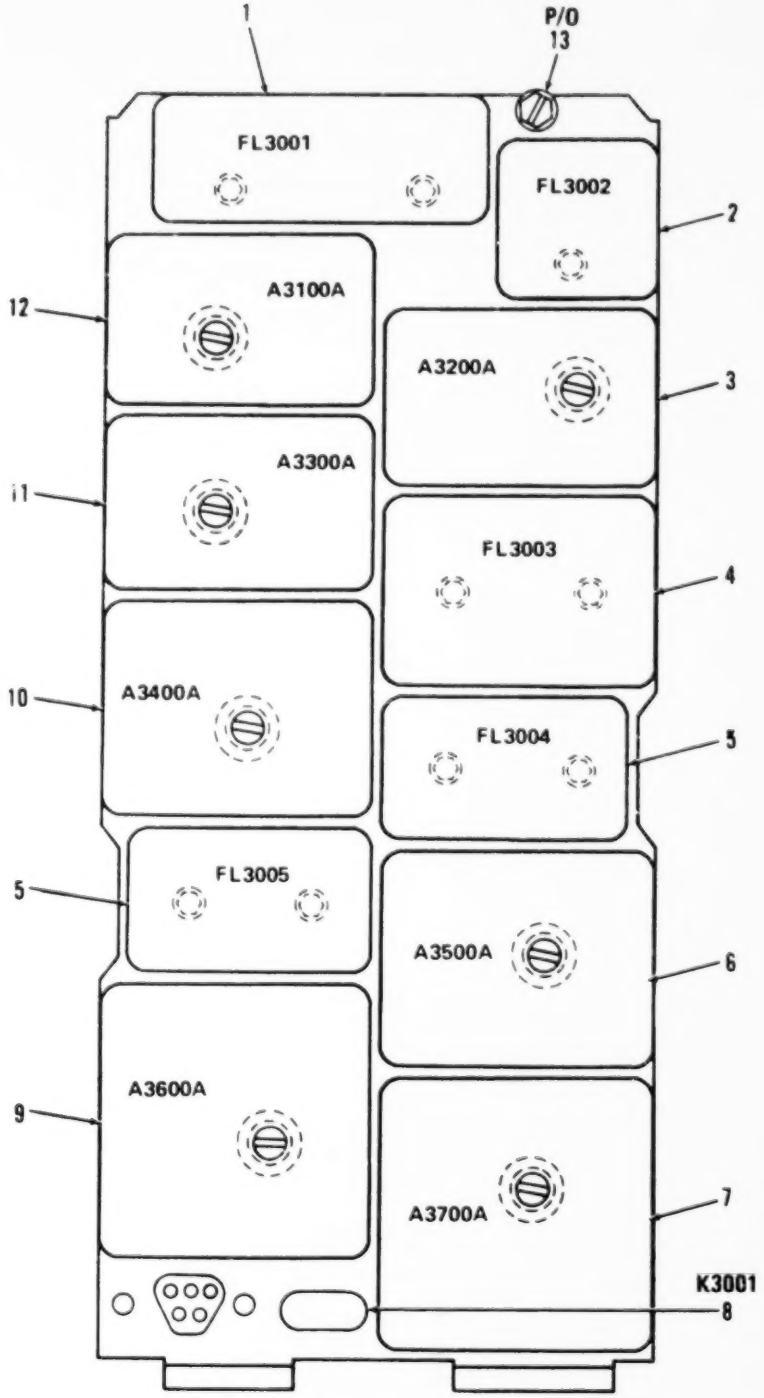

Figure 118. Crystal Reference System Assembly (Sheet 1 of 3).

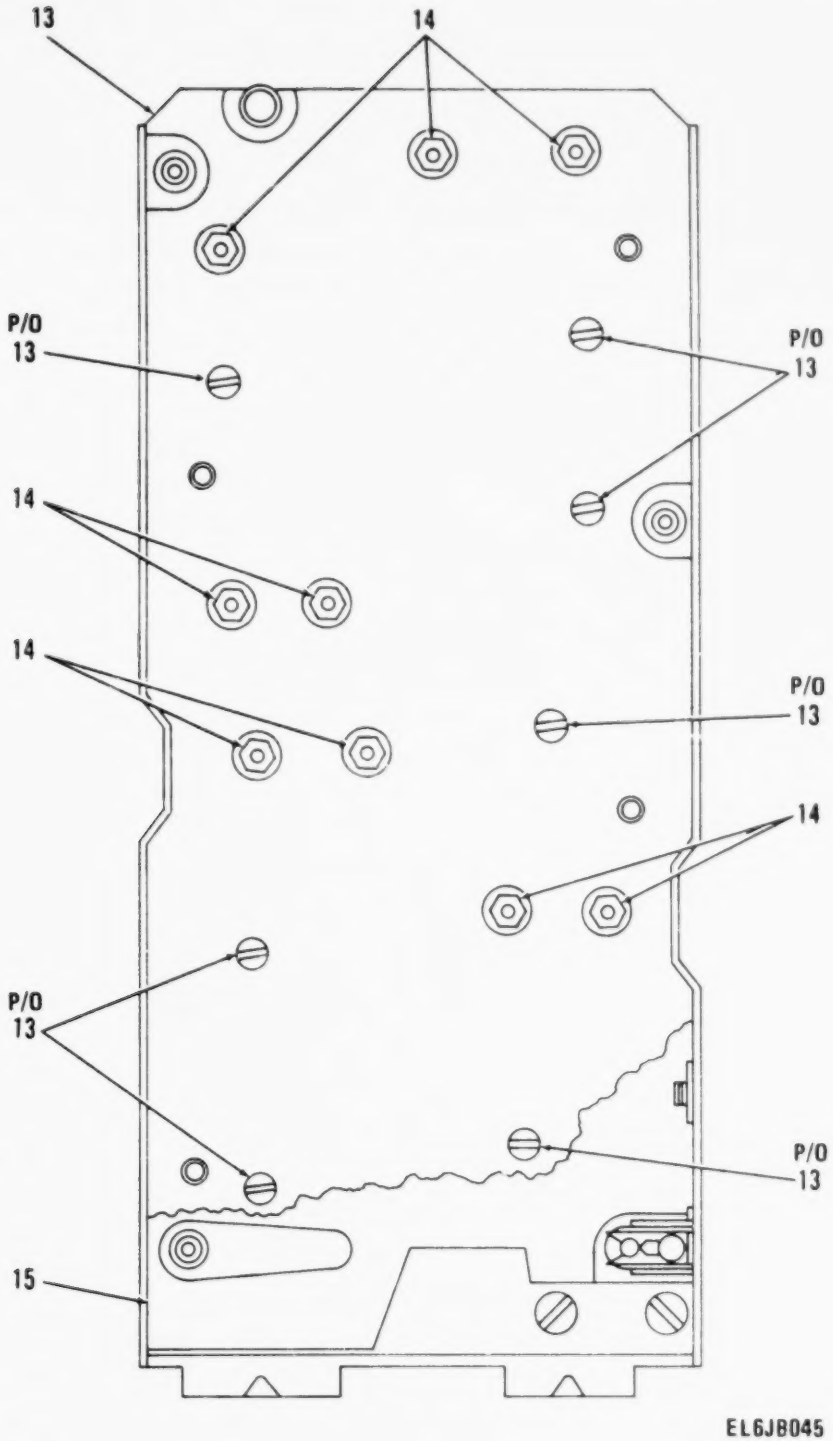

Figure 118. Crystal Reference System Assembly (Sheet 2 of 3).

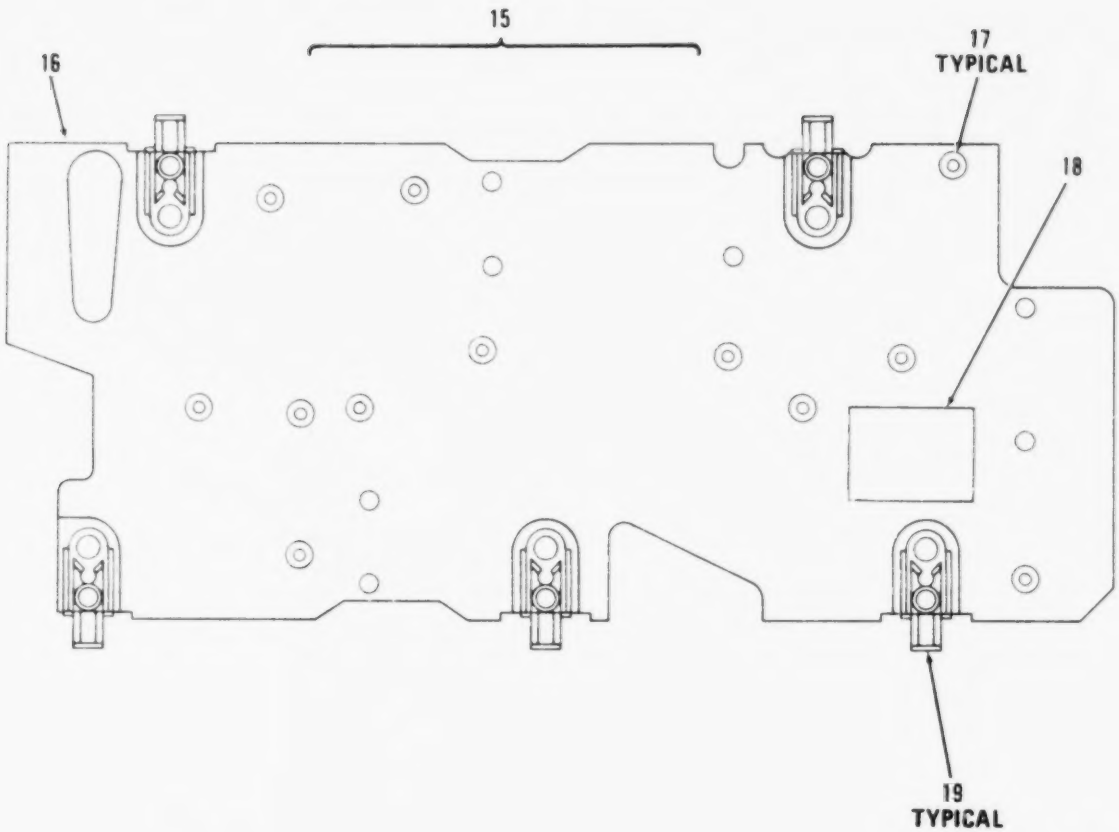

Figure 118. Crystal Reference System Assembly (Sheet 3 of 3).

(1) ILLUSTRATION (a) FIG NO	(b) ITEM NO	(2) SMR CODE	(3) NATIONAL STOCK NUMBER	(4) FSCM	(5) PART NUMBER	(6) DESCRIPTION USABLE ON CODE	(7) U/M	(8) QTY INC IN UNIT
						GROUP 0102 CRYSTAL REFERENCE SYSTEM		
						ASSEMBLY A3000 AND A3000A		
						SM-D-413519		
118	1	PAFZZ	5915-00-853-6528	80063	SM-D-413522	FILTER,LOW PASS 1000 OHMS,PORM 30 PCT INPUT/OUTPUT IMPD AT 5 MHZ	EA	1
118	2	PAFZZ	5915-00-853-8583	80063	SM-D-413521	FILTER,HIGH PASS 50 OHMS PORM 20 PCT INPUT/OUTPUT IMPD AT 50 MHZ	EA	1
118	3	PAFDL	5820-00-858-6483	80063	SM-B-921185	BALANCE MIXER ASSY	EA	1
118	4	PAFZZ	5915-00-899-4169	80063	SM-D-413524	FILTER,BAND PASS 550 OHMS MIN INPUT/OUTPUT IMPD AT 54.55 MHZ PORM 50 KHZ	EA	1
118	5	PAFZZ	5915-00-899-7910	80063	SM-D-413523	FILTER,BAND PASS 510 OHMS,PORM 30 PCT INPUT/OUTPUT IMPD AT 5.625 MHZ	EA	2
118	6	PAFDL		80063	SM-B-921241	IF-LNTR ASSY,THIRD	EA	1
118	7	PAFDL		80063	SM-D-921271	PHASE DSCRM ASSY	EA	1
118	8	PAFZZ	5945-00-853-6450	80063	SM-D-413526	RELAY,ELECTROMAGNET	EA	1
118	9	PAFDL		80063	SM-B-921255	HUNT DSCRM ASSY	EA	1
118	10	PAFDL	5820-00-853-5962	80063	SM-D-921227	IF ASSY,1 AND 2	EA	1
118	11	PAFDL		80063	SM-B-921213	SECOND MIXER ASSY	EA	1
118	12	PAFDL		80063	SM-D-921201	HARMONIC GEN ASSY	EA	1
118	13	PAFZZ	5820-01-129-4157	80063	SM-D-413528	CHASSIS,ELECTRICAL	EA	1
118	14	PAFZZ	5310-00-582-9176	30655	F92-1660-40	NUT,SELF-LOCKING,ME	EA	1
118	15	PAFZZ	5820-00-858-6483	80063	SM-D-413551	PLATE ASSEMBLY,ELEC	EA	1
118	16	XAFZZ		80063	SM-D-413553	PLATE,SHIELD	EA	1
118	17	PAFZZ	3120-00-897-6873	80063	SM-B-413554	BUSHING,SLEEVE	EA	62
118	18	XBFZZ		80063	SM-B-414302-5	PAD,RUBBER	EA	1
118	19	PAFZZ	5325-00-262-9130	88447	38881-L	LATCH,SNAPSLIDE FAS	EA	5

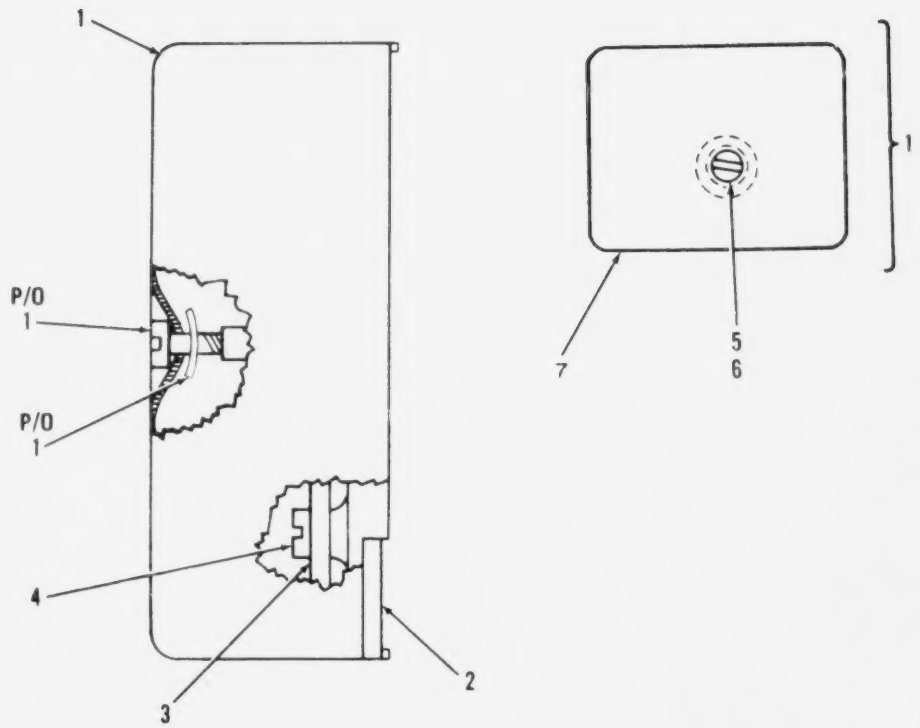

Figure 119. Harmonic Generator Assembly

(1) ILLUSTRATION (a) FIG NO	(1) ILLUSTRATION (b) ITEM NO	(2) SMR CODE	(3) NATIONAL STOCK NUMBER	(4) FSCM	(5) PART NUMBER	(6) DESCRIPTION / USABLE ON CODE	(7) U/M	(8) QTY INC IN UNIT
						GROUP 010201 HARMONIC GENERATOR ASSY		
						A3100A SM-D-921201		
119	1	XDDZZ		80063	SM-B-413562	COVER ASSY	EA	1
119	2	XDDZZ		80063	SM-D-413561	BASE	EA	1
119	3	XDDDL		80063	SM-D-921202	OSCILLATOR ASSY,RF	EA	1
119	4	PADZZ	5305-00-855-0962	96906	MS24629-3	SCREW,TAPPING,THREA	EA	2
119	5	PADZZ	5305-00-988-5747	83486	43-04-04120CD PL	SCREW,ASSEMBLED WAS	EA	1
119	6	PADZZ		78553	C-18695SS-012	FASTENER,SH SPR	EA	1
119	7	XDDZZ		80063	SM-C-413564	COVER	EA	1

LEGEND

REF DES	ITEM NO	REF DES	ITEM NO	REF DES	ITEM NO	REF DES	ITEM NO
CR3101	1	C3104	4	L3102	8	R3105	14
CR3102	2	C3105	5	Q3101	9	R3106	15
CR3103	2	C3106	6	R3101	10	R3107	16
C3101	3	C3107	3	R3102	11	T3101	17
C3102	4	C3108	3	R3103	12	Y3101	18
C3103	4	L3101	7	R3104	13		

EL6JB072

Figure 120. Oscillator Assembly, Radio Frequency (Sheet 1 of 3).

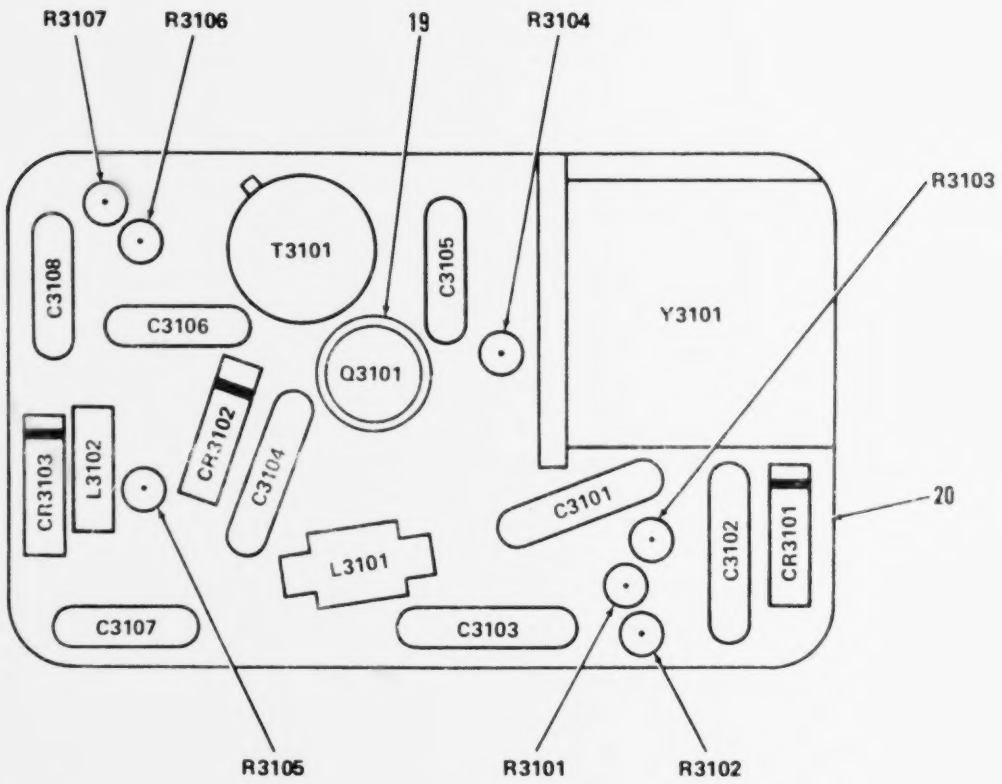

PREFIX ALL REFERENCE DESIGNATIONS WITH A3000A3100

EL6JB047

Figure 120. Oscillator Assembly, Radio Frequency (Sheet 2 of 3).

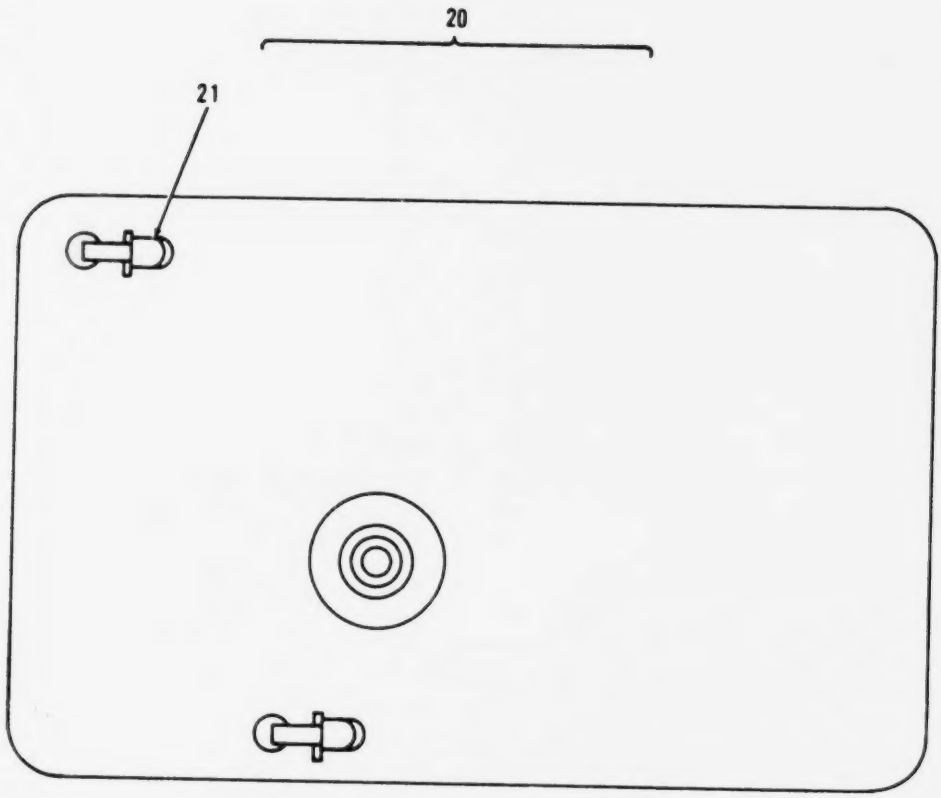

EL6JB013

Figure 120. Oscillator Assembly, Radio Frequency (Sheet 3 of 3).

(1) ILLUSTRATION (a) FIG NO	(1) ILLUSTRATION (b) ITEM NO	(2) SMR CODE	(3) NATIONAL STOCK NUMBER	(4) FSCM	(5) PART NUMBER	(6) DESCRIPTION / USABLE ON CODE	(7) U/M	(8) QTY INC IN UNIT
						GROUP 01020101 OSCILLATOR,RADIO FREQ		
120	1	PADZZ	5961-00-752-6163	81349	JAN1N965B	SEMICONDUCTOR DEVIC	EA	1
120	2	PADZZ	5961-00-938-1135	81349	JAN1N4148	SEMICOND DVC,DIODE	EA	2
120	3	PADZZ	5910-00-892-3027	80063	SM-C-413567-1	CAPACITOR,FIXED,CER .001 UF,PORM 20 PCT,100 VDCW	EA	3
120	4	PADZZ	5910-00-857-5305	18796	855-222X5S0-103M	CAPACITOR,FIXED,CER .01 UF,PORM 20 PCT,100 VDCW	EA	3
120	5	PADZZ	5910-00-890-0554	80063	SM-C-413567-3	CAPACITOR,FIXED,CER .0047 UF,PORM 20 PCT,100 VDCW	EA	1
120	6	PADZZ		81349	CMR05F161GODL	CAPACITOR,MICA DIEL	EA	1
120	7	PADZZ	5950-00-891-9158	80063	SM-C-413577	COIL,RADIO,FREQUEN 1 MILLIH INDUCTANCE PORM 10 PCT	EA	1
120	8	PADZZ	5950-00-043-0423	96906	MS14046-8	COIL,RADIO FREQUENC	EA	1
120	9	PADZZ	5961-00-925-3777	81349	JAN2N2907A	TRANSISTOR	EA	1
120	10	PADZZ	5905-00-110-7620	81349	RCR07G102JS	RESISTOR,FIXED,COMP	EA	1
120	11	PADZZ	5905-00-105-7768	81349	RCR07G561JS	RESISTOR,FIXED,COMP	EA	1
120	12	PADZZ	5905-00-126-6683	81349	RCR07G332JS	RESISTOR,FIXED,COMP	EA	1
120	13	PADZZ	5905-00-110-7622	81349	RCR07G682JS	RESISTOR,FIXED,COMP	EA	1
120	14	PADZZ	5905-00-106-1278	81349	RCR07G123JS	RESISTOR,FIXED,COMP	EA	1
120	15	PADZZ	5905-00-116-8555	81349	RCR07G153JS	RESISTOR,FIXED,COMP	EA	1
120	16	PADZZ	5905-00-110-7620	81349	RCR07G102JS	RESISTOR,FIXED,COMP	EA	1
120	17	PADZZ		80063	SM-D-921203	TRANSFORMER ASSY,RF	EA	1
120	18	PADZZ		80063	SM-C-413570	CRYSTAL UNIT ASSY 1.0 MHZ	EA	1
120	19	PADZZ	5970-00-989-8333	07047	A-10042	INSULATOR,DISK	EA	1
120	20	XADZZ		80063	SM-C-413571	CIRCUIT BD ASSY	EA	1
120	21	XADZA		80063	SM-C-413574	CONTACT,ELEC	EA	2

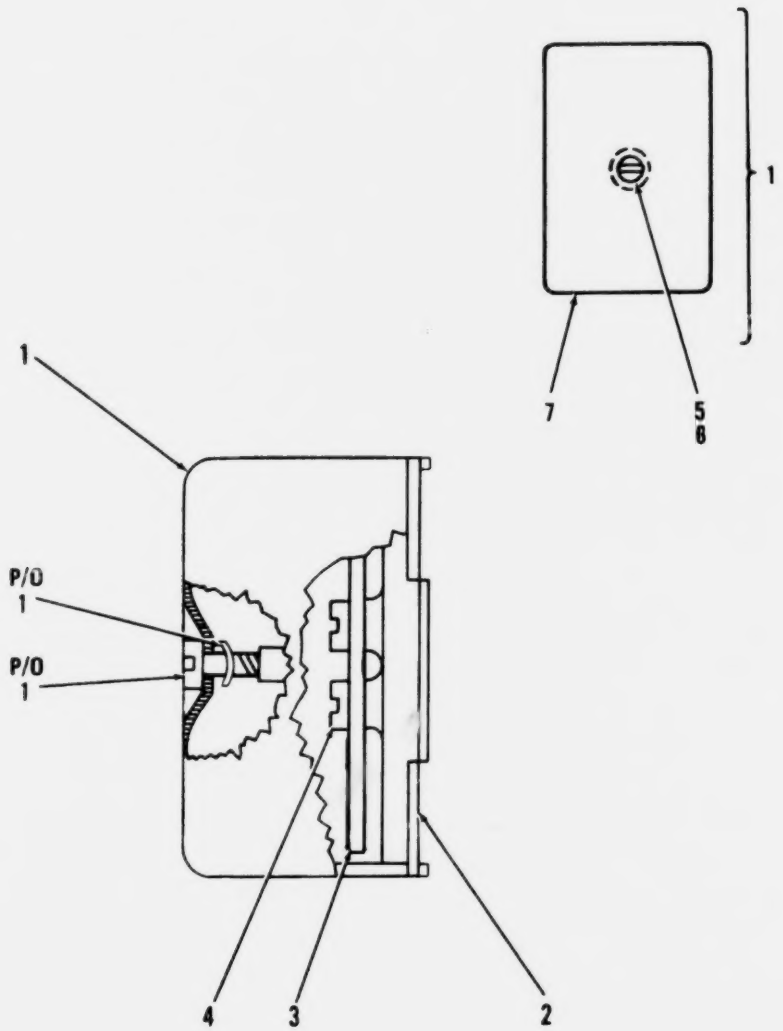

Figure 121. Balanced Mixer Assembly.

(1) ILLUSTRATION (a) FIG NO	(1) ILLUSTRATION (b) ITEM NO	(2) SMR CODE	(3) NATIONAL STOCK NUMBER	(4) FSCM	(5) PART NUMBER	(6) DESCRIPTION / USABLE ON CODE	(7) U/M	(8) QTY INC IN UNIT
						GROUP 010202 BALANCED MIXER ASSEMBLY		
						A3200A SN-B-921185		
121	1	XDDDL		80063	SM-B-413595	COVER ASSY	EA	1
121	2	XDDZZ		80063	SM-D-413594	BASE	EA	1
121	3	XDDDL		80063	SM-D-921179	AMPL-MIXER ASSY	EA	1
121	4	PADZZ	5305-00-855-0962	96906	MS24629-3	SCREW,TAPPING,THREA	EA	2
121	5	PADZZ	5305-00-988-5747	83486	43-04-04120CD PL	SCREW,ASSEMBLED WAS	EA	1
121	6	PADZZ		78553	C-1869SS-012	FASTENER,SH SPR	EA	1
121	7	XDDZZ		80063	SM-C-413597	COVER	EA	1

LEGEND

REF DES	ITEM NO	REF DES	ITEM NO	REF DES	ITEM NO	REF DES	ITEM NO
CR3201	1	C3206	2	R3205	9	R3211	9
C3201	2	L3201	5	R3206	10	R3212	9
C3202	2	R3201	6	R3207	11	T3201	14
C3203	3	R3202	6	R3208	12	T3202	15
C3204	4	R3203	7	R3209	13	U3201	16
C3205	2	R3204	8	R3210	9		

PREFIX ALL REFERENCE DESIGNATIONS WITH A3000AA3200A

EL6JB213

Figure 122. Amplifier-Mixer Assembly (Sheet 1 of 3).

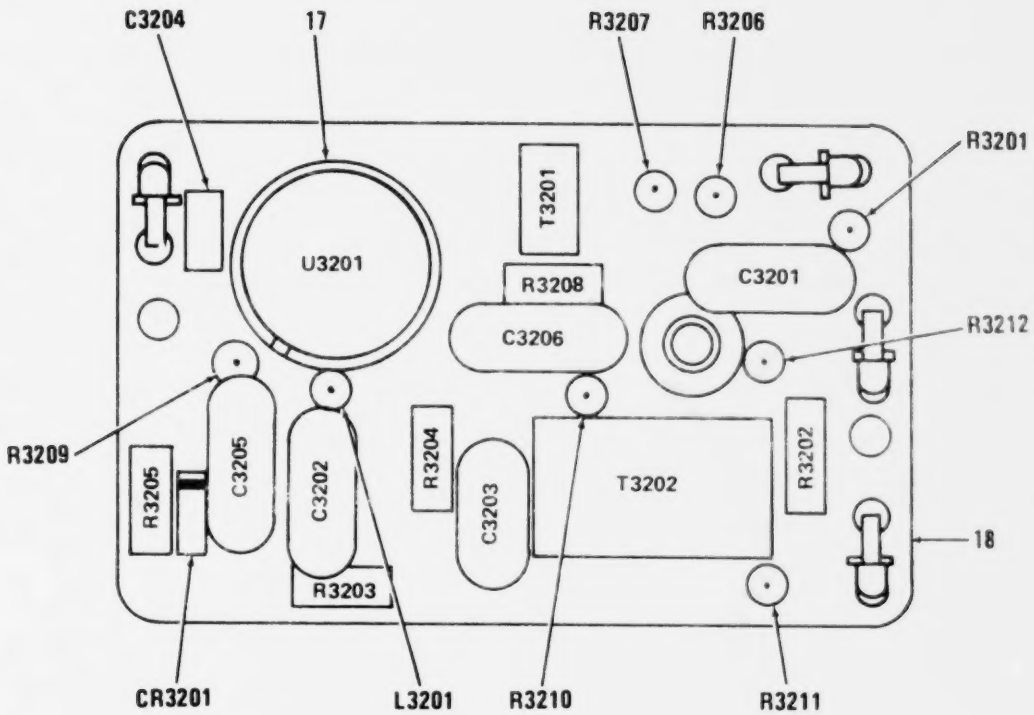

PREFIX ALL REFERENCE DESIGNATIONS WITH A3000AA3200A

EL6JB014

Figure 122. Amplifier-Mixer Assembly (Sheet 2 of 3).

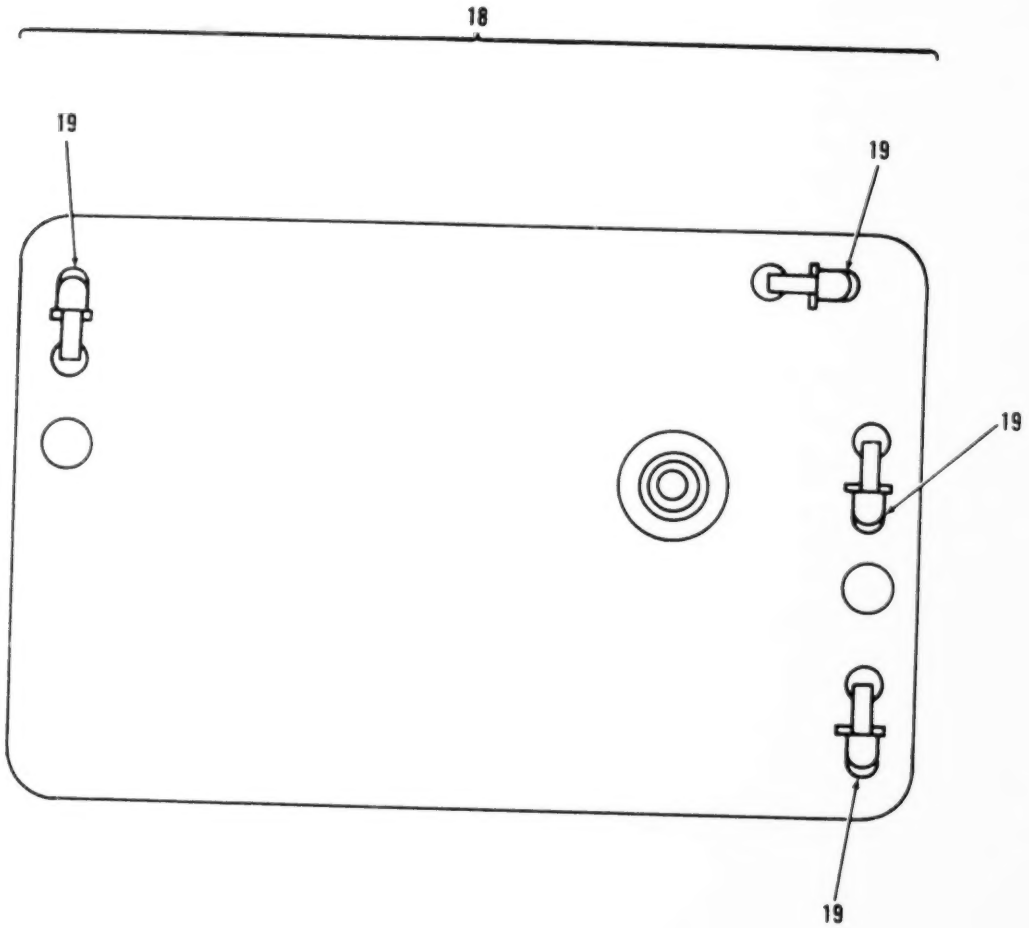

Figure 122. Amplifier-Mixer Assembly (Sheet 3 of 3).

(1) ILLUSTRATION (a) FIG NO	(1) ILLUSTRATION (b) ITEM NO	(2) SMR CODE	(3) NATIONAL STOCK NUMBER	(4) FSCM	(5) PART NUMBER	(6) DESCRIPTION USABLE ON CODE	(7) U/M	(8) QTY INC IN UNIT
						GROUP 01020201 AMPLIFIER-MIXER ASSY		
122	1	PADZZ	5961-00-938-1135	81349	JAN1N4148	SEMICOND DVC,DIODE	EA	1
122	2	PADZZ	5910-00-857-5305	18796	855-222X5S0-103M	CAPACITOR,FIXED,CER .001 UF,PORM 20 PCT,100 VDCW	EA	4
122	3	PADZZ	5910-01-033-0425	81349	CMR04E240J0DR	CAPACITOR,FIXED,MIC	EA	1
122	4	PADZZ	5910-00-010-8666	81349	M39014/01-1357	CAPACITOR,FIXED,CER	EA	1
122	5	PADZZ	5950-00-309-7904	96906	MS75084-5	COIL,RADIO FREQUENC	EA	1
122	6	PADZZ	5905-00-120-9154	81349	RCR07G471JS	RESISTOR,FIXED,COMP	EA	2
122	7	PADZZ	5905-00-118-4559	81349	RCR07G333JS	RESISTOR,FIXED,COMP	EA	1
122	8	PADZZ	5905-00-111-4727	81349	RCR07G272JS	RESISTOR,FIXED,COMP	EA	1
122	9	PADZZ	5905-00-110-7620	81349	RCR07G102JS	RESISTOR,FIXED,COMP	EA	4
122	10	PADZZ	5905-00-113-4861	81349	RCR07G390JS	RESISTOR,FIXED,COMP	EA	1
122	11	PADZZ	5905-00-107-0656	81349	RCR07G100JS	RESISTOR,FIXED,COMP	EA	1
122	12	PADZZ	5905-00-131-1255	81349	RCR07G122JS	RESISTOR,FIXED,COMP	EA	1
122	13	PADZZ	5905-00-104-8363	81349	RCR07G820JS	RESISTOR,FIXED,COMP	EA	1
122	14	PADZZ	5950-00-201-7176	06978	318-233-01	TRANSFORMER,RADIO F 50 OHMS INPUT/OUTPUT IMPD,10 TO 180 MHZ FREQ RANGE,30VDCW MAX	EA	1
122	15	XDDZZ		80063	SM-D-921188	TRANSFORMER ASSY,RF	EA	1
122	16	PADZZ	5962-00-424-9535	02735	CA3018A	MICROCIRCUIT,LINEAR 3 SILICON NPN EDITAXIAL TRANSISORS ON A COMMON MTG	EA	1
122	17	PADZZ	5961-00-946-7707	13103	7717-20-DAP	MOUNTING PADXTRANSI	EA	1
122	18	XDDDA		80063	SM-C-921181	CIRCUIT BD ASSY	EA	1
122	19	XDDZA		80063	SM-C-413574	CONTACT,ELEC	EA	4

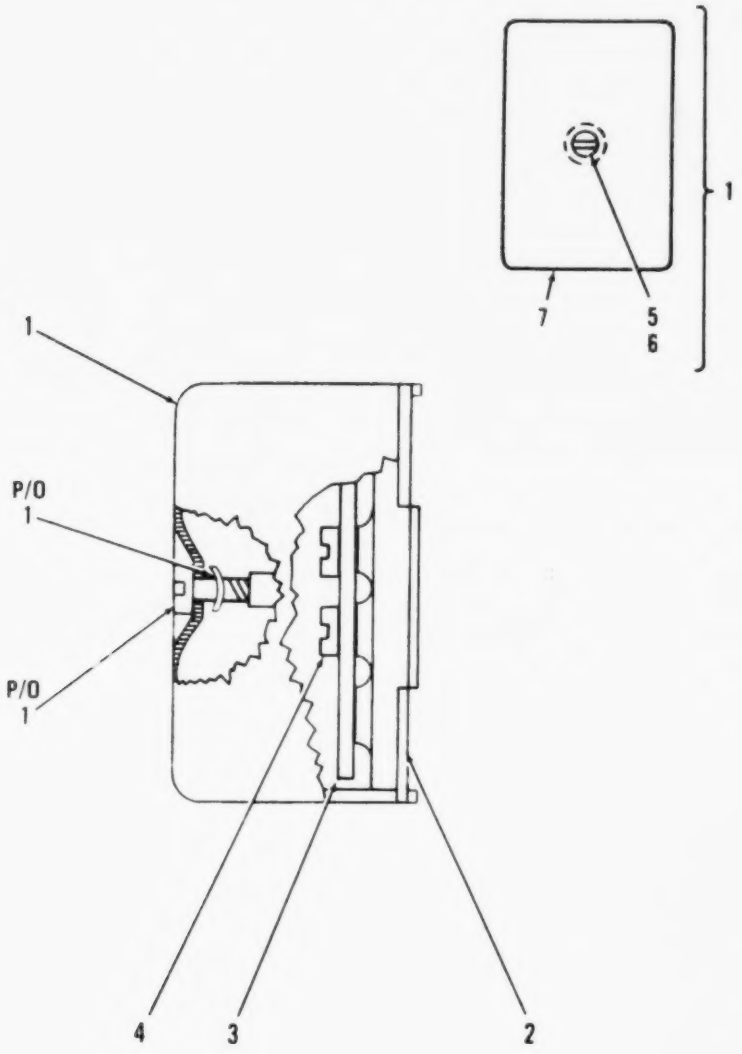

Figure 123. Second Mixer Assembly

(1) ILLUSTRATION (a) FIG NO	(1) ILLUSTRATION (b) ITEM NO	(2) SMR CODE	(3) NATIONAL STOCK NUMBER	(4) FSCM	(5) PART NUMBER	(6) DESCRIPTION / USABLE ON CODE	(7) U/M	(8) QTY INC IN UNIT
						GROUP 010203 SECOND MIXER ASSEMBLY		
						A3300A SM-B-921213		
123	1	XDDDL		80063	SM-B-413614	COVER ASSY	EA	1
123	2	XDDZZ		80063	SM-D-413613	BASE	EA	1
123	3	XDDDL		80063	SM-D-921214	MIXER STAGE ASSY	EA	1
123	4	PADZZ	5305-00-855-0962	96906	MS24629-3	SCREW,TAPPING,THREA	EA	2
123	5	PADZZ	5305-00-988-5747	83486	43-04-04120CD PL	SCREW,ASSEMBLED WAS	EA	1
123	6	PADZZ		78553	C-1869SS-012	FASTENER,SH SPR	EA	1
123	7	XDDZZ		80063	SM-C-413616	COVER	EA	1

LEGEND

REF DES	ITEM NO	REF DES	ITEM NO	REF DES	ITEM NO	REF DES	ITEM NO
CR3301	1	C3306	2	Q3301	8	R3306	12
C3302	2	C3307	5	R3301	9	T3301	13
C3303	3	C3308	2	R3303	10	T3302	14
C3304	2	C3309	6	R3304	11	T3303	15
C3305	4	J3301	7	R3305	12		

PREFIX ALL REFERENCE DESIGNATIONS WITH A3000AA3300A

EL6JB215

Figure 124. Mixer Stage Assembly (Sheet 1 of 2).

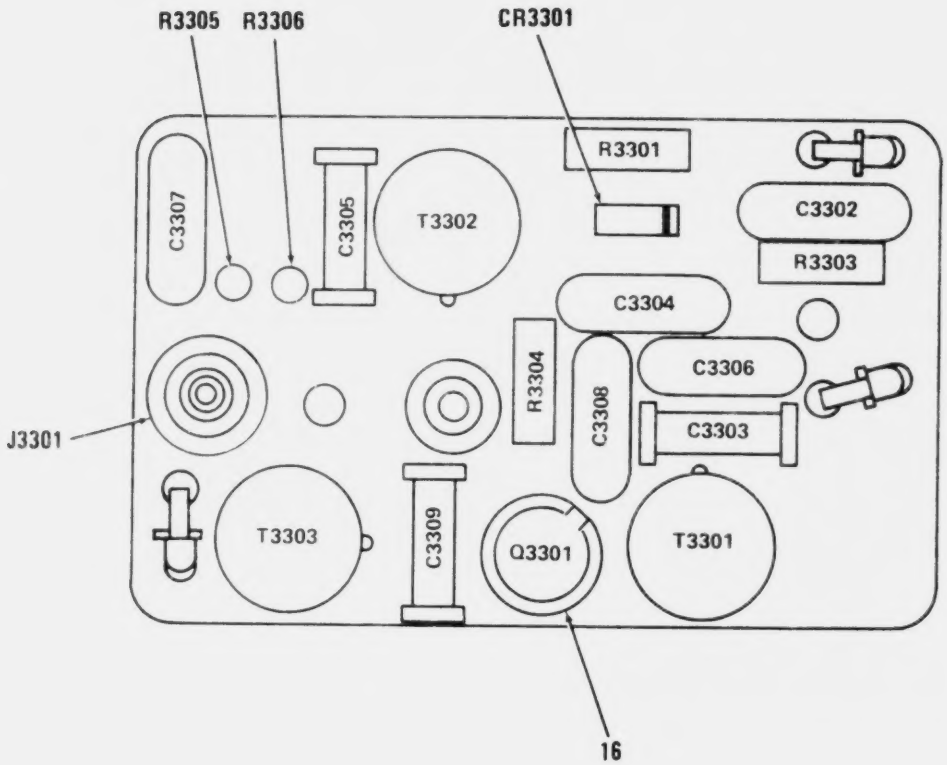

PREFIX ALL REFERENCE DESIGNATIONS WITH A3000A A3300A

EL6JB016

Figure 124. Mixer Stage Assembly (Sheet 2 of 2).

(1) ILLUSTRATION (a) FIG NO	(1) ILLUSTRATION (b) ITEM NO	(2) SMR CODE	(3) NATIONAL STOCK NUMBER	(4) FSCM	(5) PART NUMBER	(6) DESCRIPTION / USABLE ON CODE	(7) U.M	(8) QTY INC IN UNIT
						GROUP 01020301 MIXER STAGE ASSY		
124	1	PADZZ	5961-00-938-1135	81349	JAN1N4148	SEMICOND DVC,DIODE	EA	1
124	2	PADZZ		72982	855-511X5S0332M	CAPACITOR,CER DIEL .0033 UF,PORM 20 PCT,100 VDCW	EA	4
124	3	PADZZ	5910-00-726-8696	81349	CC22CH120G	CAPACITOR,FIXED,CER	EA	1
124	4	PADZZ		81349	CC20CH4R0C	CAPACITOR,CER DIEL	EA	1
124	5	PADZZ	5910-00-892-3027	80063	SM-C-413567-1	CAPACITOR,FIXED,CER .001 UF,PORM 20 PCT,100 VDCW	EA	1
124	6	PADZZ	5910-00-853-6427	81349	CC22RH200G	CAPACITOR,FIXED,CER	EA	1
124	7	PADZZ		02660	27-3	CONNECTOR,RECEPTACL	EA	1
124	8	PADZZ	5961-00-911-6015	81349	JAN2N3251A	TRANSISTOR	EA	1
124	9	PADZZ	5905-00-119-8768	81349	RCR07G821JS	RESISTOR,FIXED,COMP	EA	1
124	10	PADZZ	5905-00-114-0711	81349	RCR07G472JS	RESISTOR,FIXED,COMP	EA	1
124	11	PADZZ	5905-00-141-1183	81349	RCR07G101JS	RESISTOR,FIXED,COMP	EA	1
124	12	PADZZ	5905-00-135-6045	81349	RCR07G330JS	RESISTOR,FIXED,COMP	EA	2
124	13	PADZZ	5950-01-011-3417	80063	SM-D-413623	TRANSFORMER,RADIO F	EA	1
124	14	PADZZ	5950-00-403-0563	80063	SM-D-413625	TRANSFORMER,RADIO F	EA	1
124	15	XDDZZ		80063	SM-D-413627	TRANSFORMER ASSY,RF	EA	1
124	16	PADZZ		07047	A-10044DAP BLK	INSULATOR,DISK	EA	1

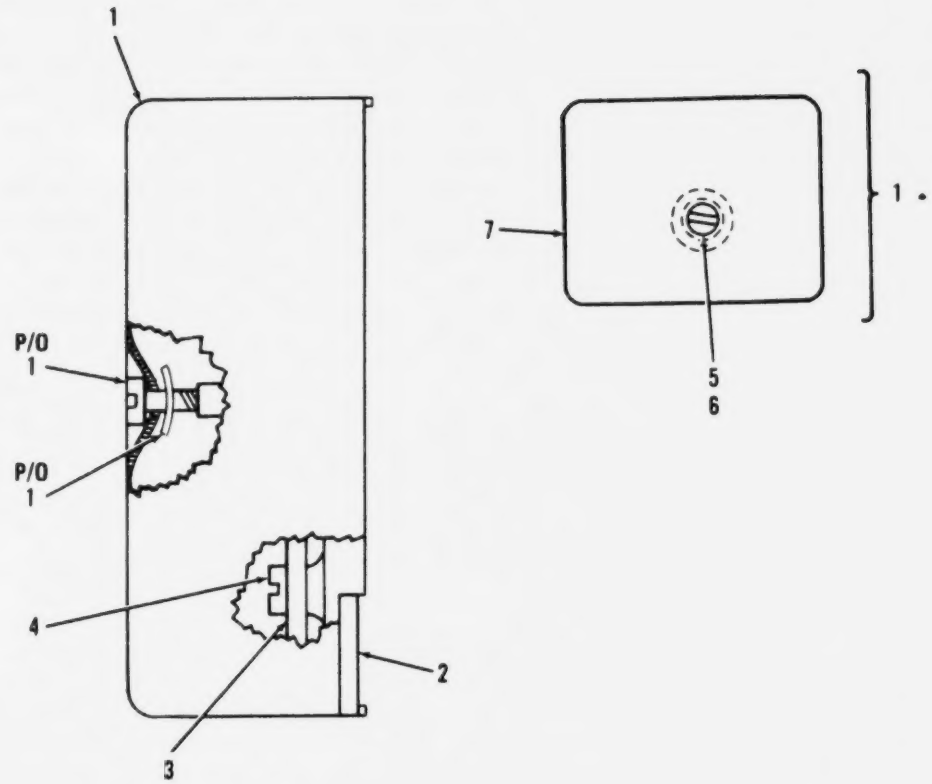

EL6JB048

Figure 125. 1st. and 2nd. Intermediate Frequency Amplifier.

(1) ILLUSTRATION (a) FIG NO	(b) ITEM NO	(2) SMR CODE	(3) NATIONAL STOCK NUMBER	(4) FSCM	(5) PART NUMBER	(6) DESCRIPTION USABLE ON CODE	(7) U/M	(8) QTY INC IN UNIT
						GROUP 010204 1ST AND 2ND IF AMPLIFIER		
						A3400A SM-D-921227		
125	1	XDDDL		80063	SM-B-413637	COVER ASSY	EA	1
125	2	XDDZZ		80063	SM-D-413636	BASE	EA	1
125	3	XDDDL		80063	SM-D-921228	IF AMPL ASSY	EA	1
125	4	PADZZ	5305-00-855-0962	96906	MS24629-3	SCREW,TAPPING,THREA	EA	2
125	5	PADZZ	5305-00-988-5747	83486	43-04-04120CD PL	SCREW,ASSEMBLED WAS	EA	1
125	6	PADZZ		78553	C-18A95SS-012	FASTENER,SH SPR	EA	1
125	7	XDDZZ		80063	SM-C-413639	COVER	EA	1

505/(506 BLANK)

LEGEND

REF DES	ITEM NO	REF DES	ITEM NO	REF DES	ITEM NO	REF DES	ITEM NO
C3401	1	C3407	1	R3403	8	R3408	11
C3402	2	C3408	4	R3404	9	R3409	11
C3403	1	Q3401	5	R3405	10	R3410	11
C3404	3	Q3402	5	R3406	6	T3401	12
C3405	1	R3401	6	R3407	11	T3402	13
C3406	1	R3402	7				

PREFIX ALL REFERENCE DESIGNATIONS WITH A3000AA3400A

EL6JB210

Figure 126. Intermediate Frequency Amplifier Assembly (Sheet 1 of 2).

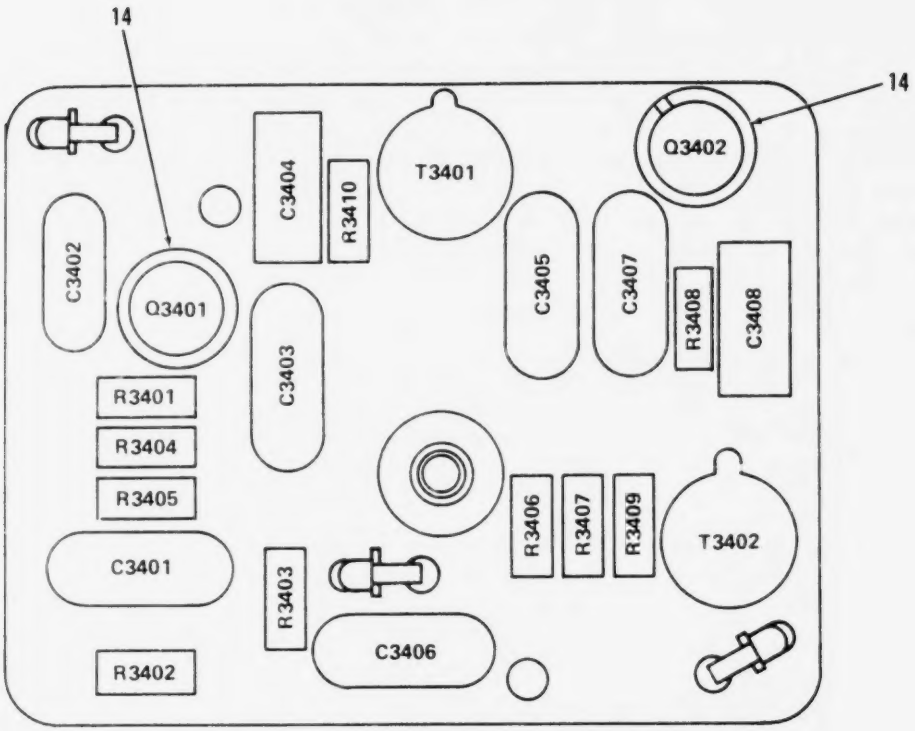

PREFIX ALL REFERENCE DESIGNATIONS WITH A3000AA3400A

EL6JB017

Figure 126. Intermediate Frequency Amplifier Assembly (Sheet 2 of 2).

(1) ILLUSTRATION (a) FIG NO	(1) ILLUSTRATION (b) ITEM NO	(2) SMR CODE	(3) NATIONAL STOCK NUMBER	(4) FSCM	(5) PART NUMBER	(6) DESCRIPTION / USABLE ON CODE	(7) U/M	(8) QTY INC IN UNIT
						GROUP 01020401 INTERMEDIATE FREQ AMP ASSY		
126	1	PADZZ	5910-00-857-5305	18796	855-222X5S0-103M	CAPACITOR,FIXED,CER .01 UF,PORM 20 PCT,100 VDCW	EA	5
126	2	PADZZ	5910-00-890-0556	80063	SM-C-413567-3	CAPACITOR,FIXED,CER .0047 UF,PORM 20 PCT,100 VDCW	EA	1
126	3	PADZZ		81349	CC20UJ3R0C	CAPACITOR,CER DIEL	EA	1
126	4	PADZZ		81349	CC20UJ8R0C	CAPACITOR,CER DIEL	EA	1
126	5	PADZZ	5961-00-925-3777	81349	JAN2N2907A	TRANSISTOR	EA	2
126	6	PADZZ	5905-00-111-4727	81349	RCR07G272JS	RESISTOR,FIXED,COMP	EA	2
126	7	PADZZ	5905-00-119-8768	81349	RCR07G821JS	RESISTOR,FIXED,COMP	EA	1
126	8	PADZZ	5905-00-120-9154	81349	RCR07G471JS	RESISTOR,FIXED,COMP	EA	1
126	9	PADZZ	5905-00-104-8358	81349	RCR07G822JS	RESISTOR,FIXED,COMP	EA	1
126	10	PADZZ	5905-00-114-5343	81349	RCR07G182JS	RESISTOR,FIXED,COMP	EA	1
126	11	PADZZ	5905-00-141-0744	81349	RCR07G562JS	RESISTOR,FIXED,COMP	EA	1
126	12	PADZZ	5950-01-011-4802	80063	SM-D-413645	TRANSFORMER,RADIO F	EA	1
126	13	PADZZ	5950-01-012-1367	80063	SM-D-413647	TRANSFORMER,RADIO F	EA	1
126	14	PADZZ		07047	A-10044DAP BLK	INSULATOR,DISK	EA	2

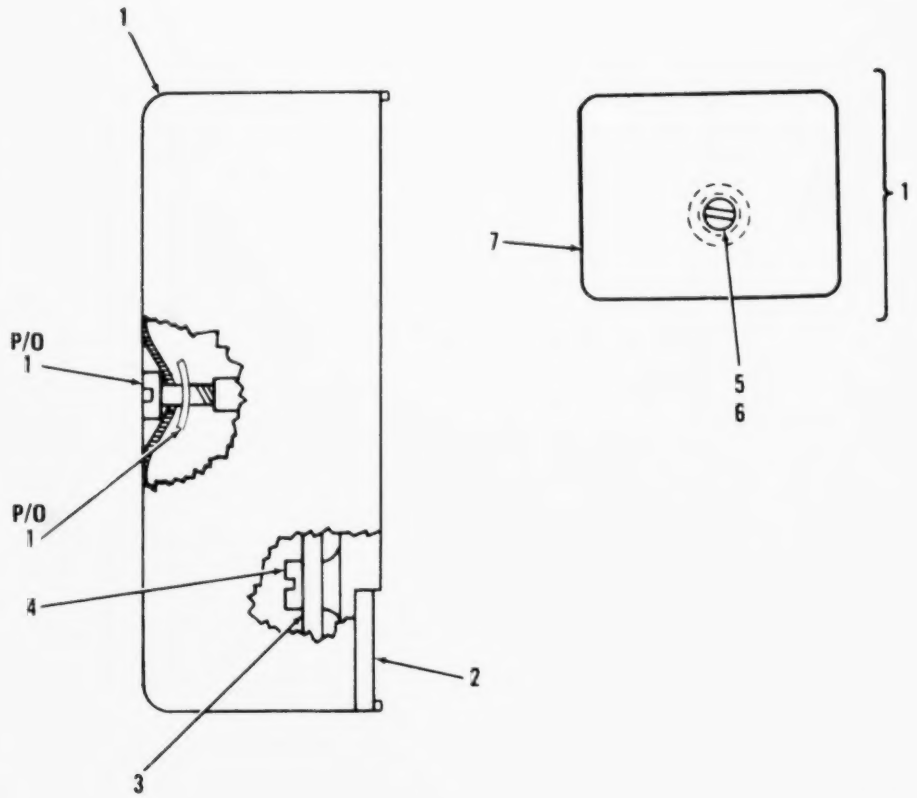

EL6JB049

Figure 127. 3rd. Intermediate Frequency and Limiter Assembly.

(1) ILLUSTRATION (a) FIG NO	(1) ILLUSTRATION (b) ITEM NO	(2) SMR CODE	(3) NATIONAL STOCK NUMBER	(4) FSCM	(5) PART NUMBER	(6) DESCRIPTION / USABLE ON CODE	(7) U/M	(8) QTY INC IN UNIT
						GROUP 010205 3RD IF AND LIMITER ASSY		
						A3500A SM-B-921241		
127	1	XDDDL		80063	SM-B-413653	COVER ASSY	EA	1
127	2	XDDZZ		80063	SM-D-413652	BASE	EA	1
127	3	XDDDL		80063	SM-D-921242	AMPL LMTR ASSY	EA	1
127	4	PADZZ	5305-00-855-0962	96906	MS24629-3	SCREW,TAPPING,THREA	EA	2
127	5	PADZZ	5305-00-988-5747	83486	43-04-04120CD PL	SCREW,ASSEMBLED WAS	EA	1
127	6	PADZZ		78553	C-1869555-012	FASTENER,SH SPR	EA	1
127	7	XDDZZ		80063	SM-C-413655	COVER	EA	1

511/(512 BLANK)

LEGEND

REF DES	ITEM NO	REF DES	ITEM NO	REF DES	ITEM NO	REF DES	ITEM NO
C3501	1	C3507	2	R3501	8	R3507	10
C3502	2	C3508	2	R3502	9	R3508	13
C3503	2	C3509	5	R3503	10	T3501	14
C3504	2	L3501	6	R3504	11	T3502	15
C3505	3	Q3501	7	R3505	12	T3503	16
C3506	4	Q3502	7	R3506	8		

PREFIX ALL REFERENCE DESIGNATIONS WITH A3000AA3500A

EL6JB212

Figure 128. Amplifier-Limiter Assembly (Sheet 1 of 2).

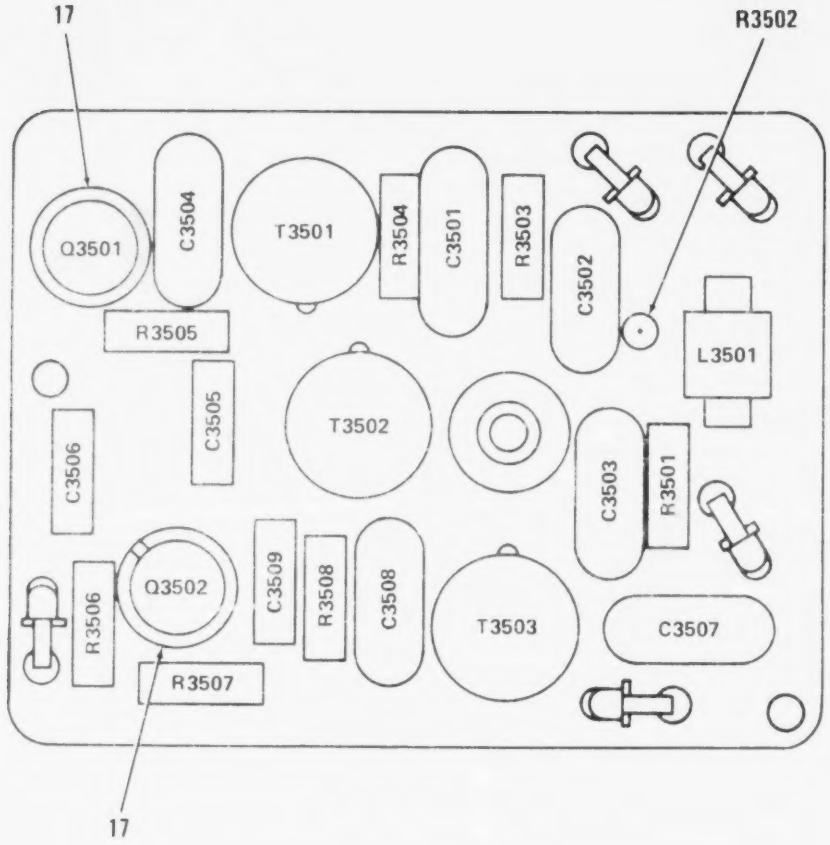

PREFIX ALL REFERENCE DESIGNATIONS WITH A3000AA3500A

EL6JB018

Figure 128. Amplifier-Limiter Assembly (Sheet 2 of 2).

(1) ILLUSTRATION (a) FIG NO	(b) ITEM NO	(2) SMR CODE	(3) NATIONAL STOCK NUMBER	(4) FSCM	(5) PART NUMBER	(6) DESCRIPTION / USABLE ON CODE	(7) U/M	(8) QTY INC IN UNIT
						GROUP 01020501 AMPLIFIER-LIMITER ASSY		
128	1	PADZZ	5910-01-044-8563	81349	CMR05F221GODR	CAPACITOR,FIXED,MIC.....	EA	1
128	2	PADZZ	5910-00-857-5305	18796	855-222X5S0-103M	CAPACITOR,FIXED,CER .01 UF,PORM 20 PCT,100 VDCW.....	EA	5
128	3	PADZZ		81349	CC20UJ3R0C	CAPACITOR,CER DIEL.....	EA	1
128	4	PADZZ	5910-00-121-7379	81349	M39014/01-1360	CAPACITOR,FIXED,CER.....	EA	1
128	5	PADZZ	5910-00-842-3086	81349	CC22UJ180G	CAPACITOR,FIXED,CER.....	EA	1
128	6	PADZZ	5950-00-891-9158	80063	SM-C-413577	COIL,RADIO,FREQUEN 1 MILLIH INDUCTANCE PORM 10 PCT.....	EA	1
128	7	PADZZ	5961-00-925-3777	81349	JAN2N2907A	TRANSISTOR.....	EA	2
128	8	PADZZ	5905-00-110-7620	81349	RCR07G102JS	RESISTOR,FIXED,COMP.....	EA	2
128	9	PADZZ	5905-00-114-5343	81349	RCR07G182JS	RESISTOR,FIXED,COMP.....	EA	1
128	10	PADZZ	5905-00-141-0744	81349	RCR07G562JS	RESISTOR,FIXED,COMP.....	EA	2
128	11	PADZZ	5905-00-105-7764	81349	RCR07G222JS	RESISTOR,FIXED,COMP.....	EA	1
128	12	PADZZ	5905-00-111-4727	81349	RCR07G272JS	RESISTOR,FIXED,COMP.....	EA	1
128	13	PADZZ	5905-00-126-6683	81349	RCR07G332JS	RESISTOR,FIXED,COMP.....	EA	1
128	14	PADZZ	5950-01-011-3189	80063	SM-D-413663	TRANSFORMER,RADIO F.....	EA	1
128	15	PADZZ	5950-01-011-3190	80063	SM-D-413665	TRANSFORMER,RADIO F.....	EA	1
128	16	PADZZ	5950-01-011-3191	80063	SM-D-413667	TRANSFORMER,RADIO F.....	EA	1
128	17	PADZZ		07047	A-10044DAP BLK	INSULATOR,DISK.....	EA	2

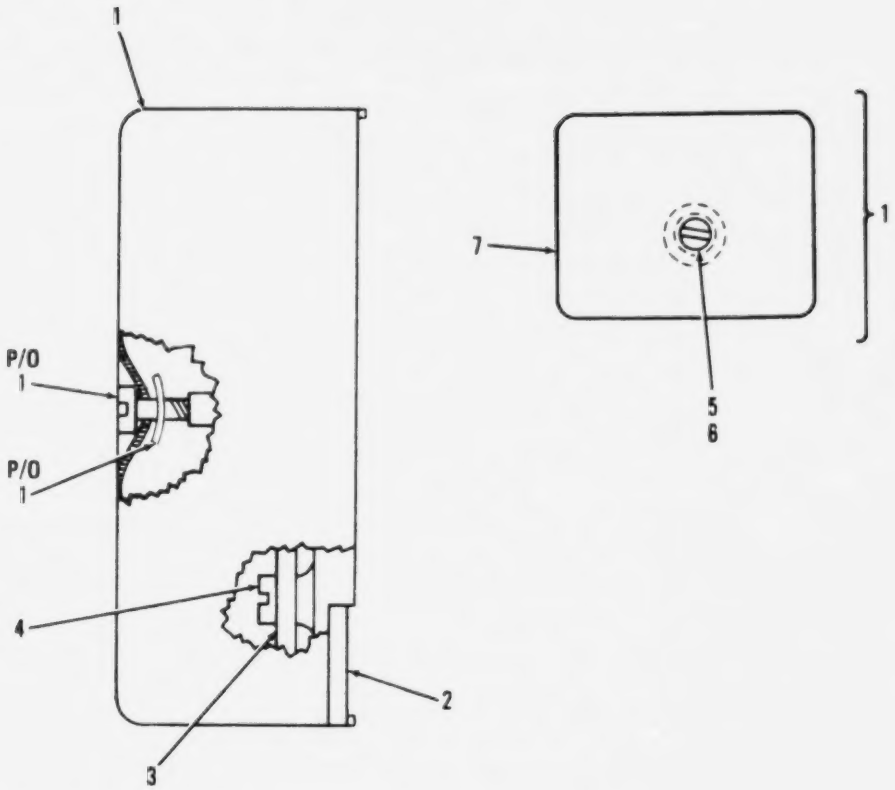

Figure 129. Hunt Frequency Discriminator Assembly.

(1) ILLUSTRATION (a) FIG NO	(1) ILLUSTRATION (b) ITEM NO	(2) SMR CODE	(3) NATIONAL STOCK NUMBER	(4) FSCM	(5) PART NUMBER	(6) DESCRIPTION / USABLE ON CODE	(7) U/M	(8) QTY INC IN UNIT
						GROUP 010206 HUNT FREQ DISCR ASSEMBLY		
						A3600A SN-B-921255		
129	1	XDDDL		80063	SM-B-413673	COVER ASSY	EA	1
129	2	XDDZZ		80063	SM-D-413672	BASE	EA	1
129	3	XDDDL		80063	SM-D-921256	FREQ CONT ASSY	EA	1
129	4	PADZZ	5305-00-855-0962	96906	MS24629-3	SCREW,TAPPING,THREA	EA	2
129	5	PADZZ	5305-00-988-5747	83486	43-04-04120CD PL	SCREW,ASSEMBLED WAS	EA	1
129	6	PADZZ		78553	C-18695SS-012	FASTENER,SH SPR	EA	1
129	7	XDDZZ		80063	SM-C-413675	COVER	EA	1

LEGEND

REF DES	ITEM NO	REF DES	ITEM NO	REF DES	ITEM NO	REF DES	ITEM NO
CR3601	1	C3605	4	C3612	9	R3603	15
CR3602	2	C3606	5	L3601	10	R3605	16
CR3603	2	C3607	6	L3602	11	R3606	16
C3601	3	C3608	7	Q3601	12	T3601	17
C3602	4	C3609	8	R3601	13	T3602	18
C3603	4	C3610	8	R3602	14	T3603	19
C3604	4	C3611	9				

PREFIX ALL REFERENCE DESIGNATIONS WITH A3000AA3600A

EL6JB207

Figure 130. Frequency Control Assembly (Sheet 1 of 2).

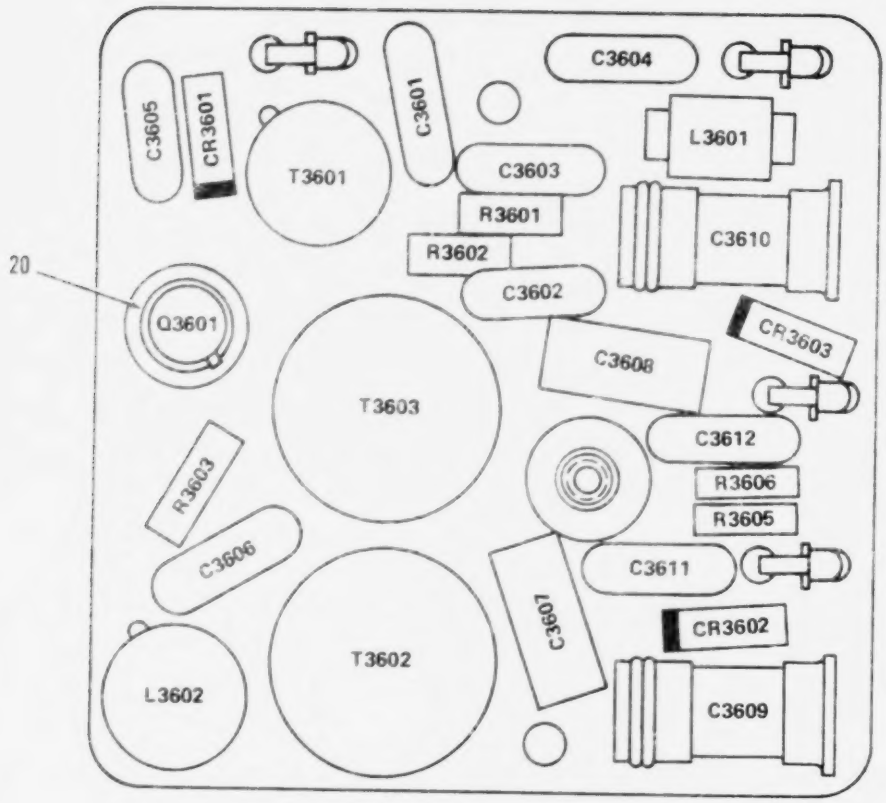

PREFIX ALL REFERENCE DESIGNATIONS WITH A3000AA3600A

EL6JB069

Figure 130. Frequency Control Assembly (Sheet 2 of 2).

(1) ILLUSTRATION (a) FIG NO	(1) ILLUSTRATION (b) ITEM NO	(2) SMR CODE	(3) NATIONAL STOCK NUMBER	(4) FSCM	(5) PART NUMBER	(6) DESCRIPTION USABLE ON CODE	(7) U/M	(8) QTY INC IN UNIT
						GROUP 01020601 FREQUENCY CONTROL ASSY		
130	1	PADZZ	5961-00-833-3043	81349	JAN1N757A	SEMICONDUCTOR DEVIC	EA	1
130	2	PADZZ	5961-00-938-1135	81349	JAN1N4148	SEMICOND DVC,DIODE	EA	2
130	3	PADZZ		81349	CMR05F181F0DL	CAPACITOR,MICA DIEL	EA	1
130	4	PADZZ	5910-00-857-5305	18796	855-222X5S0-103M	CAPACITOR,FIXED,CER .01 UF,PORM 20 PCT,100 VDCW	EA	4
130	5	PADZZ		81349	CMR05F151F0DL	CAPACITOR,MICA DIEL	EA	1
130	6	PADZZ	5910-00-938-7532	81349	CC30PH470F	CAPACITOR,FIXED,CER	EA	1
130	7	PADZZ	5910-00-938-7531	81349	CC30LH470F	CAPACITOR,FIXED,CER	EA	1
130	8	PADZZ	5910-00-992-3306	81349	PC51J110	CAPACITOR,VARIABLE	EA	2
130	9	PADZZ	5910-00-892-3027	80063	SM-C-413567-1	CAPACITOR,FIXED,CER .001 UF,PORM 20 PCT,100 VDCW	EA	2
130	10	PADZZ	5950-00-891-9158	80063	SM-C-413577	COIL,RADIO,FREQUEN 1 MILLIH INDUCTANCE PORM 10 PCT	EA	1
130	11	PADZZ	5950-01-011-4809	80063	SM-D-413692	COIL,RADIO FREQUENC 5.37 UH PORM 10 PCT AT 7.9 MHZ PORM .02 PCT	EA	1
130	12	PADZZ	5961-00-925-3777	81349	JAN2N2907A	TRANSISTOR	EA	1
130	13	PADZZ	5905-00-105-7764	81349	RCR07G222JS	RESISTOR,FIXED,COMP	EA	1
130	14	PADZZ	5905-00-110-7622	81349	RCR07G682JS	RESISTOR,FIXED,COMP	EA	1
130	15	PADZZ	5905-00-120-9154	81349	RCR07G471JS	RESISTOR,FIXED,COMP	EA	1
130	16	PADZZ	5905-00-106-1357	81349	RCR07G563JS	RESISTOR,FIXED,COMP	EA	2
130	17	PADZZ	5950-01-012-6300	80063	SM-D-413690	TRANSFORMER,RADIO F	EA	1
130	18	XDDZZ		80063	SM-C-413694	TRANSFORMER ASSY,RF 14.6 MILLIH MIN INDUCTANCE AT 2.5 MHZ PORM 125 HZ	EA	1
130	19	XDDZZ		80063	SM-C-413681	TRANSFORMER ASSY,RF 11.8 MILLIH MIN INDUCTANCE AT 2.5 MHZ PORM 125 HZ	EA	1
130	20	PADZZ		07047	A-10044DAP BLK	INSULATOR,DISK	EA	1

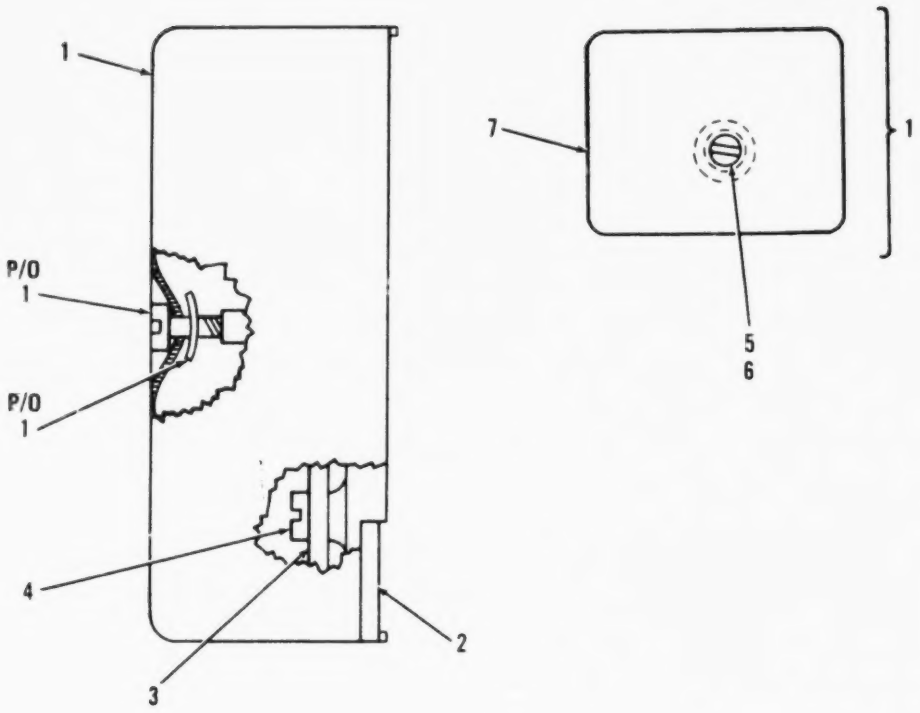

Figure 131. Phase Discriminator Assembly

(1) ILLUSTRATION (a) FIG NO	(1) ILLUSTRATION (b) ITEM NO	(2) SMR CODE	(3) NATIONAL STOCK NUMBER	(4) FSCM	(5) PART NUMBER	(6) DESCRIPTION USABLE ON CODE	(7) U/M	(8) QTY INC IN UNIT
						GROUP 010207 PHASE DISC ASSEMBLY		
						A3700A SM-D-921271		
131	1	XDDDL		80063	SM-B-413702	COVER ASSY	EA	1
131	2	XDDZZ		80063	SM-D-413701	BASE	EA	1
131	3	XDDDL		80063	SM-D-921272	FREQ CONTROL ASSY	EA	1
131	4	PADZZ	5305-00-855-0962	96906	MS24629-3	SCREW,TAPPING,THREA	EA	2
131	5	PADZZ	5305-00-988-5747	83486	43-04-04120CD PL	SCREW,ASSEMBLED WAS	EA	1
131	6	PADZZ		78553	C-18695SS-012	FASTENER,SH SPR	EA	1
131	7	XDDZZ		80063	SM-C-413704	COVER	EA	1

LEGEND

REF DES	ITEM NO	REF DES	ITEM NO	REF DES	ITEM NO	REF DES	ITEM NO
CR3701	1	C3709	9	R3702	14	R3712	21
CR3702	1	C3710	9	R3703	15	R3713	22
CR3703	1	C3711	9	R3704	15	R3714	23
C3701	2	C3712	9	R3705	16	R3715	22
C3702	2	C3713	9	R3706	17	R3716	23
C3703	3	C3714	9	R3707	18	R3717	24
C3704	4	J3701	10	R3708	19	R3718	25
C3705	5	L3701	11	R3709	20	R3719	26
C3706	6	Q3701	12	R3710	21	T3701	27
C3707	7	Q3702	12	R3711	20	T3702	28
C3708	8	R3701	13				

PREFIX ALL REFERENCE DESIGNATIONS WITH A3000AA3700A

EL6JB204

Figure 132. Frequency Control Assembly (Sheet 1 of 2).

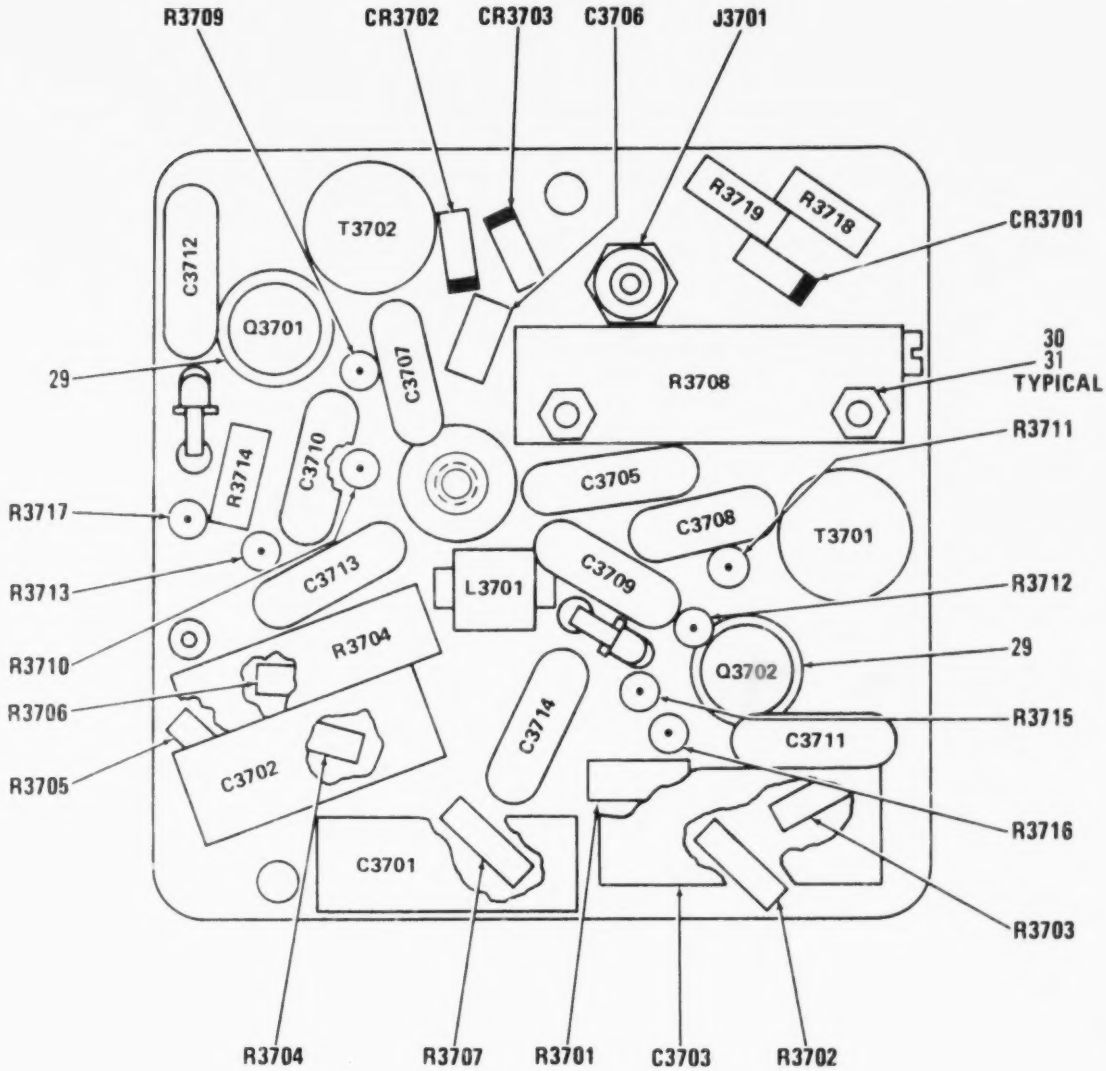

PREFIX ALL REFERENCE DESIGNATIONS WITH A3000AA3700A

EL6JB068

Figure 132. Frequency Control Assembly (Sheet 2 of 2).

(1) ILLUSTRATION (a) FIG NO	(b) ITEM NO	(2) SMR CODE	(3) NATIONAL STOCK NUMBER	(4) FSCM	(5) PART NUMBER	(6) DESCRIPTION USABLE ON CODE	(7)	(8) QTY REQ IN UNIT
						GROUP 01020T01 FREQUENCY CONTROL ASSY		
132	1	PADZZ	5961-00-938-1135	81349	JAN1N4148	SEMICOND DVC,DIODE	[illegible]	[illegible]
132	2	PADZZ	5910-00-018-8913	99515	EP-60-3	CAPACITOR,FIXED,PLA 0.2 UF,PORM 20 PCT,50 VOLW	[illegible]	[illegible]
132	3	PADZZ	5910-00-012-5547	99515	EP-60-6	CAPACITOR,FIXED,PLA 0.4 UF,PORM 20 PCT,50 VOLW	[illegible]	[illegible]
132	4	PADZZ	5910-00-947-5702	99515	HE1-104E	CAPACITOR,FIXED,PLA 0.1 UF,PORM 20 PCT,50 VOLW	[illegible]	[illegible]
132	5	PADZZ	5910-01-044-8563	81349	CMR05F221G00R	CAPACITOR,FIXED,MIC	[illegible]	[illegible]
132	6	PADZZ	5910-00-010-8666	81349	M39014/01-1357	CAPACITOR,FIXED,CER	[illegible]	[illegible]
132	7	PADZZ	5910-01-043-6899	81349	CMR05F121G00R	CAPACITOR,FIXED,MIC	[illegible]	[illegible]
132	8	PADZZ	5910-01-030-1770	81349	CMR05F151G00R	CAPACITOR,FIXED,MIC	[illegible]	[illegible]
132	9	PADZZ	5910-00-857-5305	18796	855-222X550-103M	CAPACITOR,FIXED,CER .01 UF,PORM 20 PCT,100 VOLW	[illegible]	[illegible]
132	10	PADZZ		02660	27-3	CONNECTOR,RECEPTACL 50 OHMS NOMINAL IMPEDANCE	[illegible]	[illegible]
132	11	PADZZ	5950-00-891-9158	80063	SM-C-413577	COIL,RADIO,FREQUEN 1 MILLIH INDUCTANCE PORM 10 PCT	[illegible]	[illegible]
132	12	PADZZ	5961-00-925-3777	81349	JAN2N2907A	TRANSISTOR	[illegible]	[illegible]
132	13	PADZZ	5905-00-400-4528	81349	RCR07G124JS	RESISTOR,FIXED,COMP	[illegible]	[illegible]
132	14	PADZZ	5905-00-141-0717	81349	RCR07G473JS	RESISTOR,FIXED,COMP	[illegible]	[illegible]
132	15	PADZZ	5905-00-106-1357	81349	RCR07G563JS	RESISTOR,FIXED,COMP	[illegible]	[illegible]
132	16	PADZZ	5905-00-485-4545	81349	RCR07G334JS	RESISTOR,FIXED,COMP	[illegible]	[illegible]
132	17	PADZZ	5905-00-115-3560	81349	RCR07G163JS	RESISTOR,FIXED,COMP	[illegible]	[illegible]
132	18	PADZZ	5905-00-135-3974	81349	RCR07G431JS	RESISTOR,FIXED,COMP	[illegible]	[illegible]
132	19	PADZZ	5905-00-682-4264	32997	220W-1-502	RESISTOR,VARIABLE,W 5000 OHMS,PLUS 10 PCT,MAX RESISTANCE	[illegible]	[illegible]
132	20	PADZZ	5905-00-104-8362	81349	RCR07G182JS	RESISTOR,FIXED,COMP	[illegible]	[illegible]
132	21	PADZZ	5905-00-126-6683	81349	RCR07G332JS	RESISTOR,FIXED,COMP	[illegible]	[illegible]
132	22	PADZZ	5905-00-114-0711	81349	RCR07G[illegible]72JS	RESISTOR,FIXED,COMP	[illegible]	[illegible]
132	23	PADZZ	5905-00-114-5343	81349	RCR07G182JS	RESISTOR,FIXED,COMP	[illegible]	[illegible]
132	24	PADZZ	5905-00-141-1183	81349	RCR07G101JS	RESISTOR,FIXED,COMP	[illegible]	[illegible]
132	25	PADZZ	5905-00-104-8368	81349	RCR07G470JS	RESISTOR,FIXED,WIRE	[illegible]	[illegible]
132	26	PADZZ	5905-00-141-0742	81349	RCR07G181JS	RESISTOR,FIXED,COMP	[illegible]	[illegible]
132	27	PADZZ	5950-01-011-3192	80063	SM-D-413712	TRANSFORMER,RADIO F	[illegible]	[illegible]
132	28	PADZZ	5950-01-011-4799	80063	SM-D-413714	TRANSFORMER,RADIO F	[illegible]	[illegible]
132	29	PADZZ		07047	A-10044DAP BLK	INSULATOR,DISK	[illegible]	[illegible]
132	30	PADZZ	5305-00-989-0682	96906	MS35206-205	SCREW,MACHINE	[illegible]	[illegible]
132	31	PADZZ	5310-01-100-6991	30655	F92-1660-26	NUT,SELF-LOCKING,HE	[illegible]	[illegible]

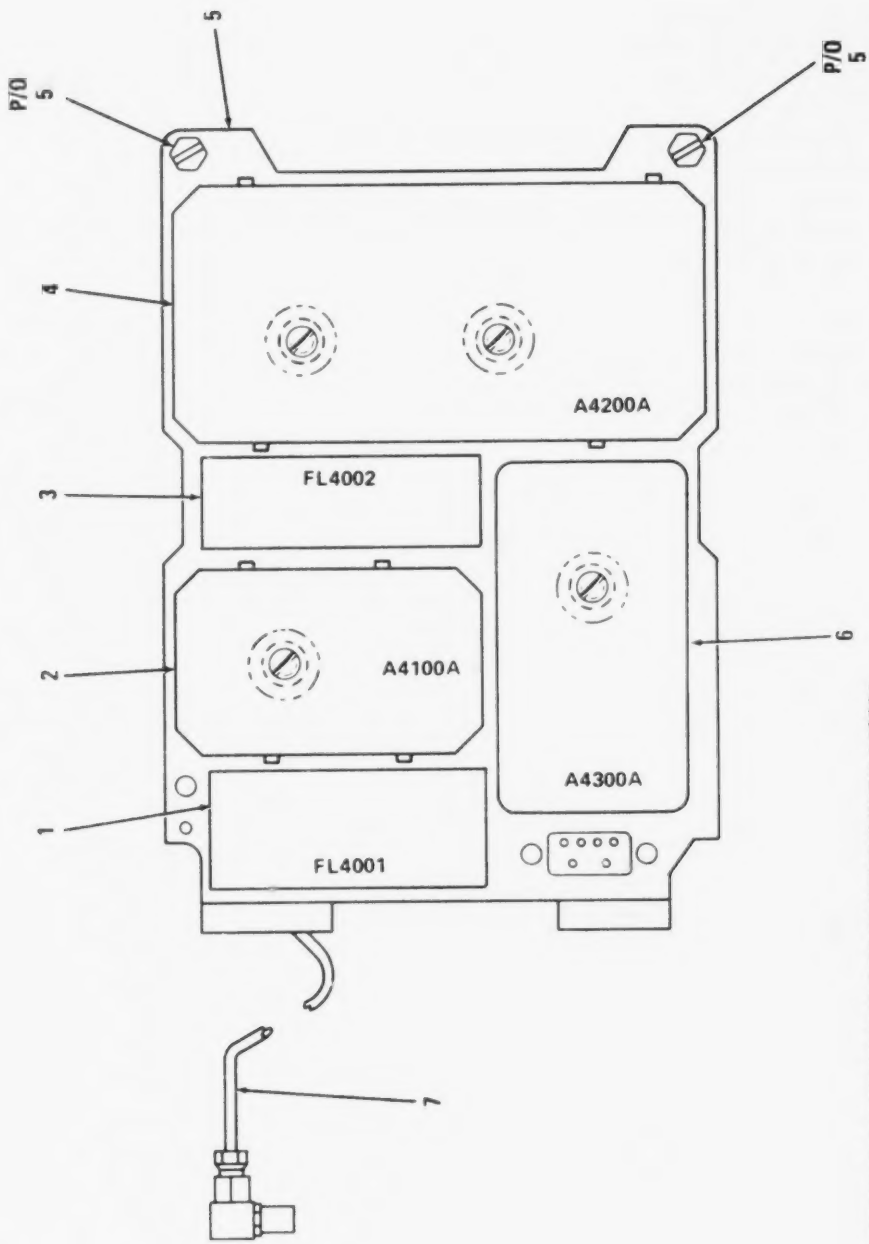

Figure 133. Amplifier Assembly, IF (Sheet 1 of 3).

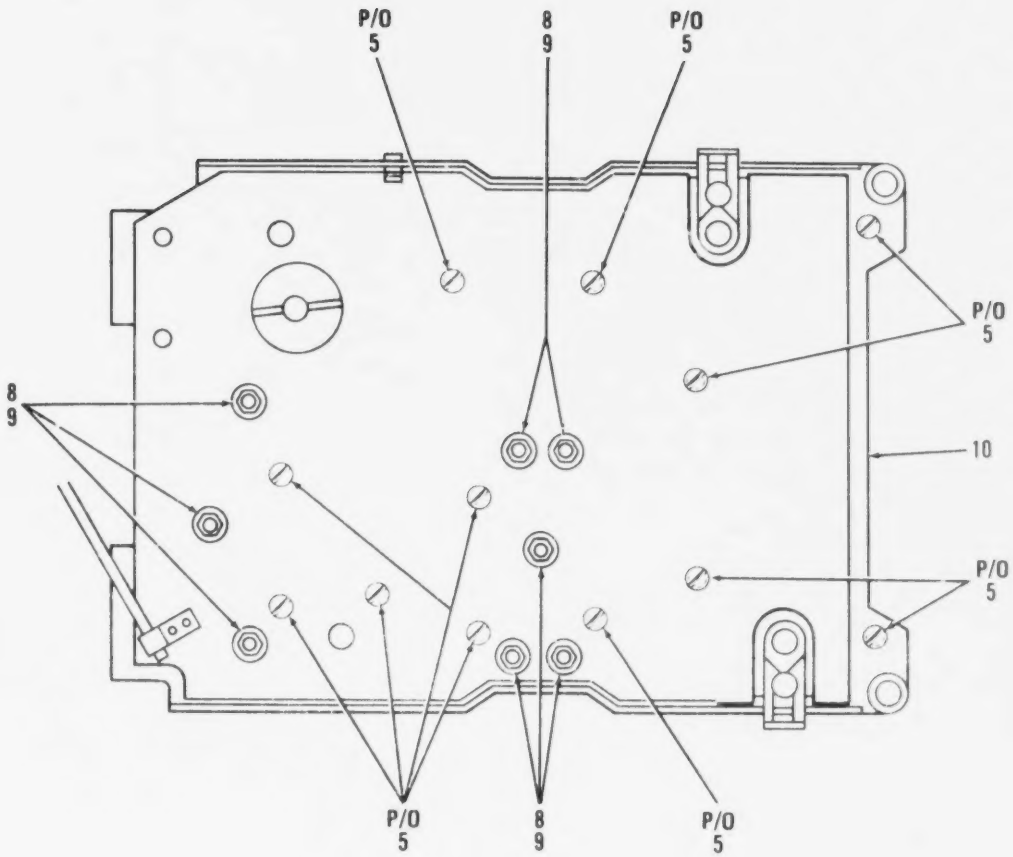

Figure 133. Amplifier Assembly, IF (Sheet 2 of 3).

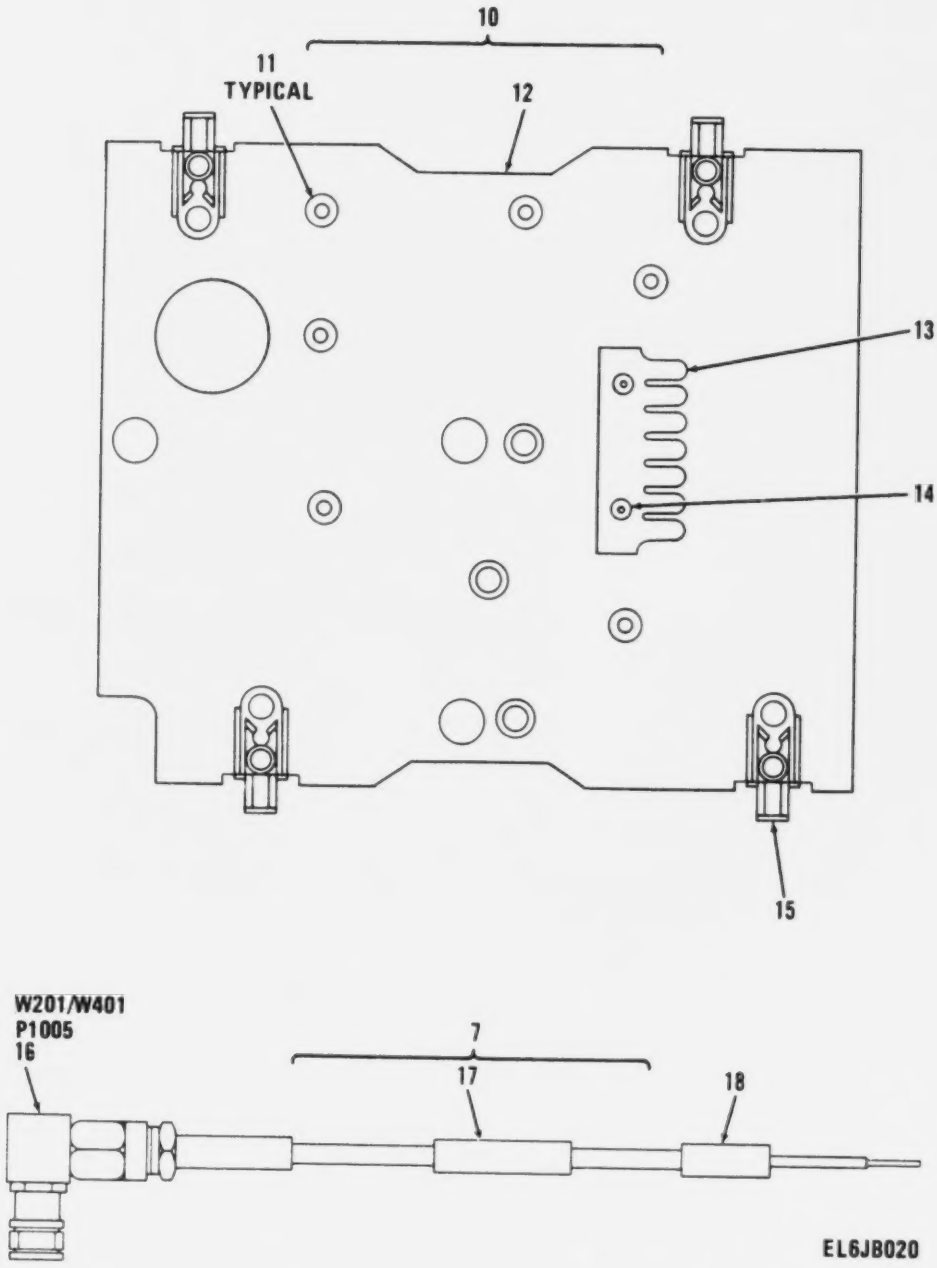

Figure 133. Amplifier Assembly, IF (Sheet 3 of 3).

(1) ILLUSTRATION (a) FIG NO	(1) ILLUSTRATION (b) ITEM NO	(2) SMR CODE	(3) NATIONAL STOCK NUMBER	(4) FSCM	(5) PART NUMBER	(6) DESCRIPTION / USABLE ON CODE	(7) U/M	(8) QTY INC IN UNIT
						GROUP 0103 AMPLIFIER ASSEMBLY,IF		
						A4000 AND A4000A		
						SM-C-413717		
133	1	PAFZZ	5915-00-849-3467	92208	819A-1	FILTER,BAND PASS 50 KHZ CHANNEL OPERATION	EA	1
133	2	PAFDA		80063	SM-C-921285	AMPL ASSY,IF 1 & 2	EA	1
133	3	PAFZZ	5915-00-849-3466	92208	847A-1	FILTER,BAND PASS 50 KHZ CHANNEL OPERATION	EA	1
133	4	PAFDA		80063	SM-C-921300	LIMITER-DISCRIM	EA	1
133	5	PAFHH	5820-00-853-5884	80063	SM-D-413802	CHASSIS,ELECTRICAL	EA	1
133	6	PAFDL		80063	SM-D-921316	AUDIO-SQUELCH ASSY	EA	1
133	7	PAFHA	5995-00-853-6375	80063	SM-D-413816-GR1	CABLE ASSY,RAD FREQ	EA	1
133	8	PAFZZ	5310-00-582-9176	30655	F92-1660-40	NUT,SELF-LOCKING,HE	EA	5
133	9	PAFZZ	5310-00-193-7577	96906	MS35333-36	WASHER,LOCK	EA	5
133	10	PAFDA	5999-00-853-6756	80063	SM-C-413722	PLATE,ELECTRICAL SH	EA	1
133	11	PAFZZ	3120-00-897-6873	80063	SM-B-413554	BUSHING,SLEEVE	EA	6
133	12	XBFZA		80063	SM-D-413724	PLATE,SHIELD	EA	1
133	13	XDDZA		30817	SM-C-374812	CONTACT STRIP	EA	1
133	14	XDDZZ		08544	SE22SL PL	EYELET,MTLC	EA	2
133	15	PAFZZ	5325-00-262-9130	88447	38881-L	LATCH,SNAPSLIDE FAS	EA	4
133	16	PAHZA	5935-00-762-0414	05009	51-311-3196	CONNECTOR,PLUG,ELEC FEMALE COAXIAL RIGHT ANGLE	EA	1
133	17	XBHZZ		80063	SM-C-413818-6	SLEEVE,MARKER	EA	1
133	18	XBHZZ		80063	SM-C-413818-35	SLEEVE,MARKER	EA	1

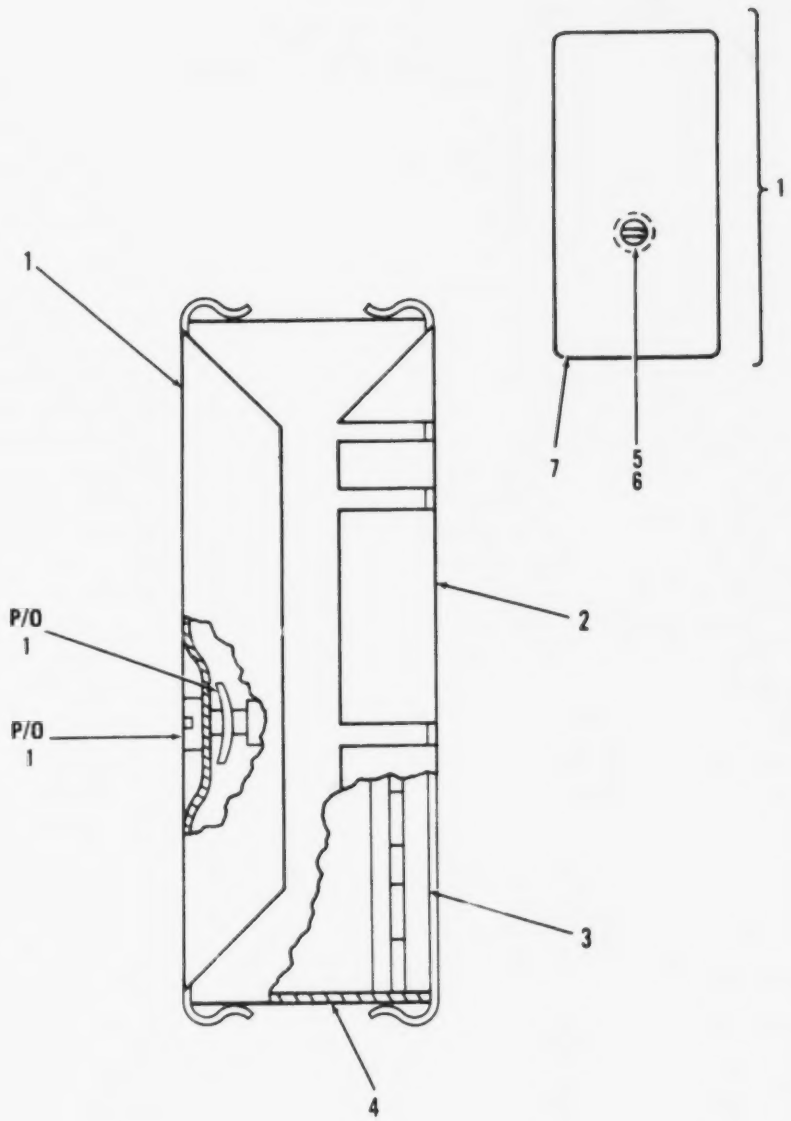

Figure 134. 1st. and 2nd. Intermediate Frequency Amplifier.

(1) ILLUSTRATION (a) FIG NO	(b) ITEM NO	(2) SMR CODE	(3) NATIONAL STOCK NUMBER	(4) FSCM	(5) PART NUMBER	(6) DESCRIPTION / USABLE ON CODE	(7) U/M	(8) QTY INC IN UNIT
						GROUP 010301 1ST AND 2ND IF AMPLIFIER ASSY A4100A SM-C-921285		
134	1	XDDDA		80063	SM-C-413730	COVER ASSY	EA	1
134	2	XDDZA		80063	SM-D-413729	COVER,BOTTOM	EA	1
134	3	XDDZZ		80063	SM-C-413728	BASE	EA	1
134	4	XDDDL		80063	SM-D-921286	AMPL,ASSY,IF	EA	1
134	5	PADZZ	5305-00-988-5747	83486	43-04-04120CD PL	SCREW,ASSEMBLED WAS	EA	1
134	6	PADZZ		78553	C-18695SS-012	FASTENER,SH SPR	EA	1
134	7	XDDZA		80063	SM-D-413732	COVER,TOP	EA	1

LEGEND

REF DES	ITEM NO	REF DES	ITEM NO	REF DES	ITEM NO	REF DES	ITEM NO
C4101	1	C4109	1	R4102	11	R4110	17
C4102	2	C4110	6	R4103	10	R4111	18
C4103	1	C4111	7	R4104	12	R4112	10
C4104	1	L4101	8	R4105	13	R4113	11
C4105	3	L4102	8	R4106	14	R4114	10
C4106	4	Q4101	9	R4107	15	T4101	19
C4107	1	Q4102	9	R4108	13	T4102	20
C4108	5	R4101	10	R4109	16	T4103	21

PREFIX ALL REFERENCE DESIGNATIONS WITH A4000AA4100A

EL6JB202

Figure 135. Amplifier, Intermediate Frequency (Sheet 1 of 2).

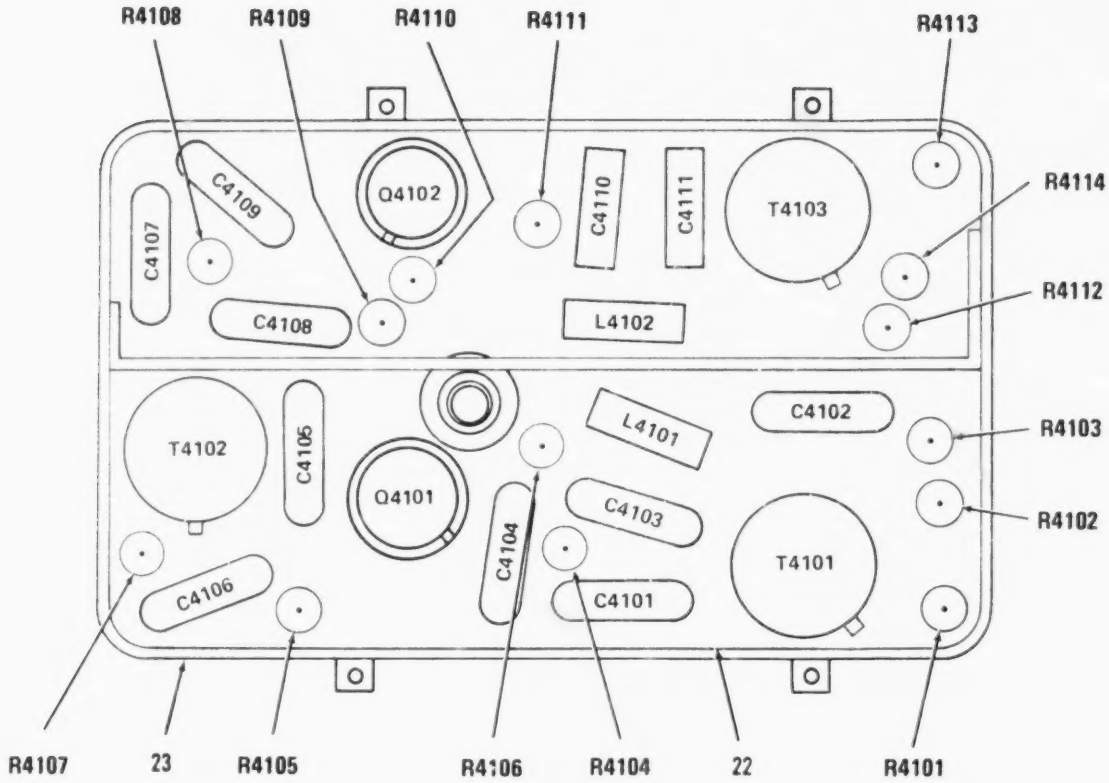

PREFIX ALL REFERENCE DESIGNATIONS WITH A4000AA4100A

EL6JB023

Figure 135. Amplifier, Intermediate Frequency (Sheet 2 of 2).

(1) ILLUSTRATION (a) FIG NO	(1) ILLUSTRATION (b) ITEM NO	(2) SMR CODE	(3) NATIONAL STOCK NUMBER	(4) FSCM	(5) PART NUMBER	(6) DESCRIPTION / USABLE ON CODE	(7) U/M	(8) QTY INC IN UNIT
						GROUP 01030101 AMPLIFIER INTERMEDIATE FREQ		
135	1	PADZZ	5910-00-857-5305	18796	855-222X5S0-103M	CAPACITOR,FIXED,CER .01 UF,PORM 20 PCT,100 VDCW	EA	5
135	2	PADZZ		81349	CMR05F181FODL	CAPACITOR,MICA DIEL	EA	1
135	3	PADZZ	5910-01-043-6891	81349	CMR05E300GODR	CAPACITOR,FIXED,MIC	EA	1
135	4	PADZZ	5910-01-044-8562	81349	CMR05F111GODR	CAPACITOR,FIXED,MIC	EA	1
135	5	PADZZ	5910-00-892-3027	80063	SM-C-413567-1	CAPACITOR,FIXED,CER .001 UF,PORM 20 PCT,100 VDCW	EA	1
135	6	PADZZ		81349	CMR05C070DODL	CAPACITOR,MICA DIEL	EA	1
135	7	PADZZ	5910-01-045-4226	81349	CMR05C120JODR	CAPACITOR,FIXED,MIC	EA	1
135	8	PADZZ	5950-01-004-7262	96906	MS14046-7	COIL,RADIO FREQUENC	EA	2
135	9	PADZZ	5961-00-911-6015	81349	JAN2N3251A	TRANSISTOR	EA	2
135	10	PADZZ	5905-00-111-4750	81349	RCR07G301JS	RESISTOR,FIXED,COMP	EA	4
135	11	PADZZ	5905-00-115-7953	81349	RCR07G180JS	RESISTOR,FIXED,COMP	EA	2
135	12	PADZZ	5905-00-104-8358	81349	RCR07G822JS	RESISTOR,FIXED,COMP	EA	1
135	13	PADZZ	5905-00-114-0711	81349	RCR07G472JS	RESISTOR,FIXED,COMP	EA	2
135	14	PADZZ	5905-00-110-7622	81349	RCR07G682JS	RESISTOR,FIXED,COMP	EA	1
135	15	PADZZ	5905-00-131-1255	81349	RCR07G122JS	RESISTOR,FIXED,COMP	EA	1
135	16	PADZZ	5905-00-141-0744	81349	RCR07G562JS	RESISTOR,FIXED,COMP	EA	1
135	17	PADZZ	5905-00-126-6683	81349	RCR07G332JS	RESISTOR,FIXED,COMP	EA	1
135	18	PADZZ	5905-00-113-4861	81349	RCR07G390JS	RESISTOR,FIXED,COMP	EA	1
135	19	PADZZ	5950-01-011-4244	80063	SM-D-413740	TRANSFORMER,RADIO F	EA	1
135	20	PADZZ	5950-01-011-4243	80063	SM-D-413735	TRANSFORMER,RADIO F	EA	1
135	21	PADZZ	5950-01-011-5527	80063	SM-D-413742	TRANSFORMER,RADIO F	EA	1
135	22	XDDZZ		80063	SM-D-921288	CIRCUIT BD ASSY	EA	1
135	23	XDDZA		80063	SM-C-413747	COVER ASSY	EA	1

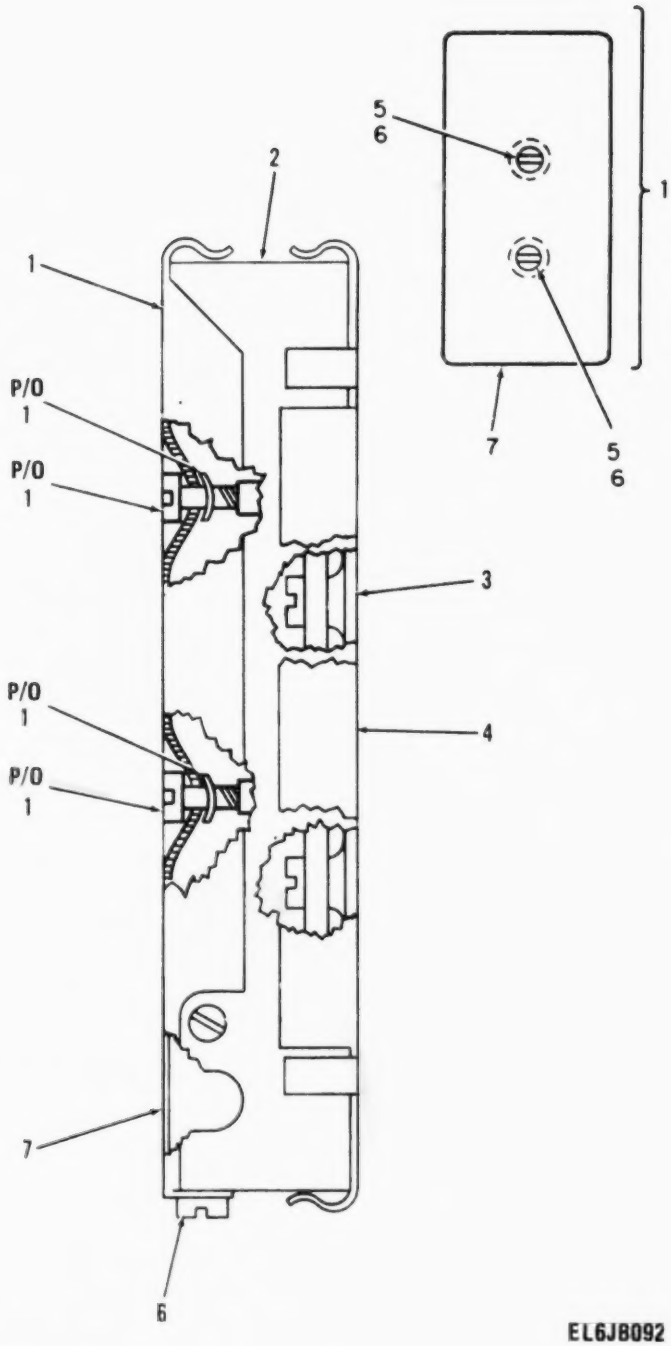

Figure 136. Limiter-Discriminator

(1) ILLUSTRATION (a) FIG NO	(1) ILLUSTRATION (b) ITEM NO	(2) SMR CODE	(3) NATIONAL STOCK NUMBER	(4) FSCM	(5) PART NUMBER	(6) DESCRIPTION / USABLE ON CODE	(7) U/M	(8) QTY INC IN UNIT
						GROUP 010302 LIMITER DISCRIMINATOR		
						A4200A SM-D-921300		
136	1	XDDDA		80063	SM-C-413761	COVER ASSY	EA	1
136	2	XDDDL		80063	SM-D-921301	AMPL DSCRM ASSY	EA	1
136	3	XDDZZ		80063	SM-D-413755	BASE	EA	1
136	4	XDDZA		80063	SM-D-413756	COVER,BOTTOM	EA	1
136	5	PADZZ		83486	43-04-04120NI PL	SCREW,ASSEM WASH	EA	2
136	6	PADZZ		78553	C-1869SS-012	FASTENER,SH SPR	EA	2
136	7	XDDZA		80063	SM-D-413763	COVER,TOP	EA	1

LEGEND

REF DES	ITEM NO	REF DES	ITEM NO	REF DES	ITEM NO	REF DES	ITEM NO
CR4201	1	C4209	3	L4201	8	R4205	17
CR4202	1	C4210	3	L4202	9	R4206	16
C4201	2	C4211	4	L4203	10	R4207	13
C4202	3	C4212	5	L4204	10	R4208	18
C4203	3	C4213	6	Q4201	11	R4209	19
C4204	4	C4214	2	Q4202	12	R4210	19
C4205	4	C4215	7	R4201	13	R4211	17
C4206	3	C4216	3	R4202	14	R4212	20
C4207	3	C4217	2	R4203	15	U4201	21
C4208	3	C4218	3	R4204	16		

PREFIX ALL REFERENCE DESIGNATIONS WITH A4000AA4200A

EL6J6201

Figure 137. Amplifier Discriminator Assembly (Sheet 1 of 2).

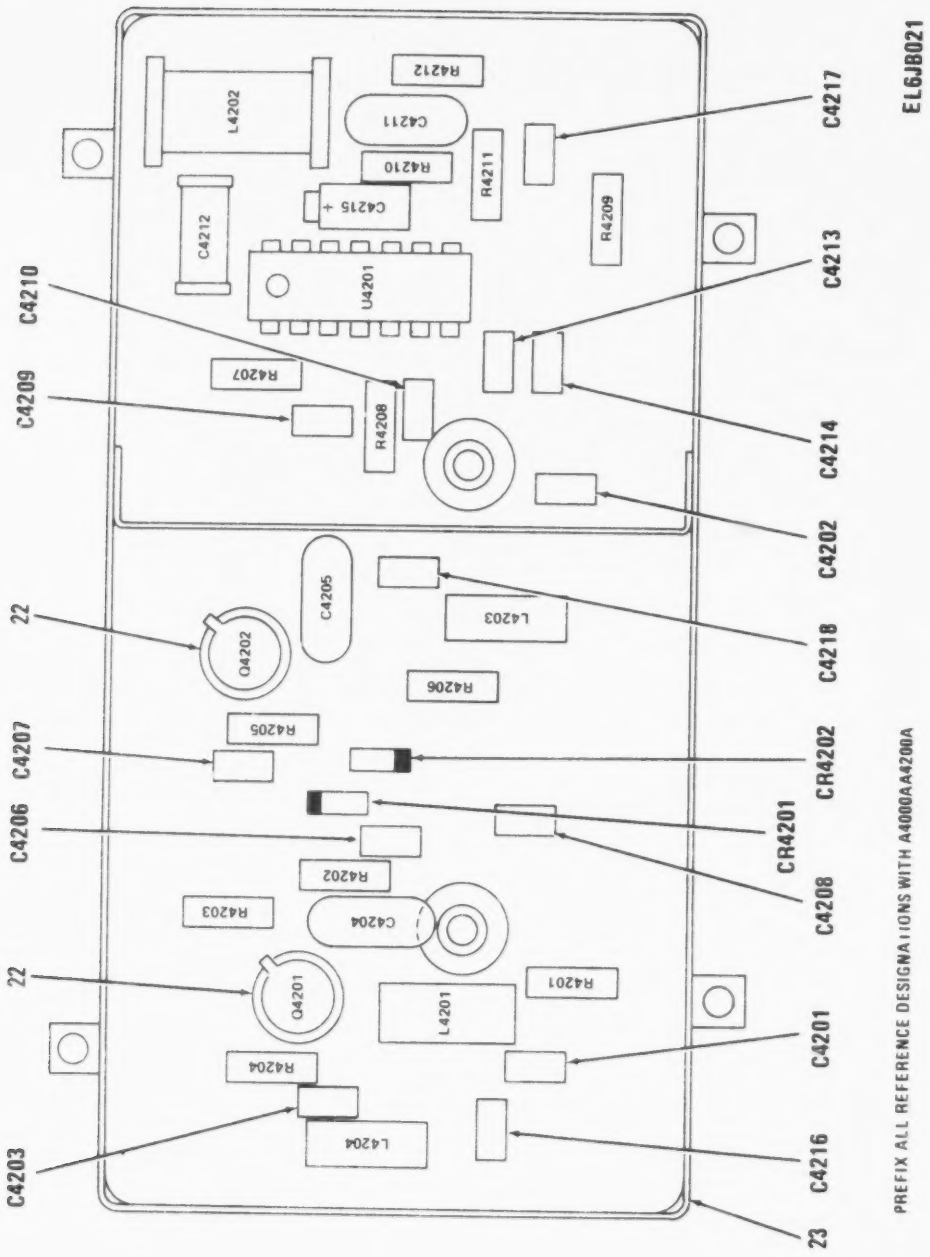

Figure 137. Amplifier Discriminator Assembly (Sheet 2 of 2).

(1) ILLUSTRATION (a) FIG NO	(b) ITEM NO	(2) SMR CODE	(3) NATIONAL STOCK NUMBER	(4) FSCM	(5) PART NUMBER	(6) DESCRIPTION / USABLE ON CODE	(7) U/M	(8) QTY INC IN UNIT
						GROUP 01030201 AMPLIFIER DISCRIMINATOR ASSEMBLY		
137	1	PADZZ	5961-00-938-1135	81349	JAN1N4148	SEMICOND DVC,DIODE	EA	2
137	2	PADZZ	5910-00-010-8666	81349	M39014/01-1357	CAPACITOR,FIXED,CER	EA	3
137	3	PADZZ		81349	M39014/01-0416	CAPACITOR,CER DIEL	EA	4
137	4	PADZZ	5910-01-043-6891	81349	CMR05E300GODR	CAPACITOR,FIXED,MIC	EA	3
137	5	PADZZ	5910-00-806-0668	81349	CC22CH7R0D	CAPACITOR,FIXED,CER	EA	1
137	6	PADZZ		81349	M39014/01-0386	CAPACITOR,CER DIEL	EA	1
137	7	PADZZ	5910-00-185-9045	81349	M39003/01-3000	CAPACITOR,FIXED,ELE	EA	1
137	8	PADZZ	5950-00-964-7450	96906	MS75008-33	COIL,RADIO FREQUENC	EA	1
137	9	PADZZ	5950-01-100-0242	80063	SM-C-413779	R.F. TRANSFORMER 4.65 UH MIN TO 5.15 UH MAX INDUCTANCE AT 7.9 MHZ PORM 50 KHZ	EA	1
137	10	PADZZ	5950-01-004-7262	96906	MS14046-7	COIL,RADIO FREQUENC	EA	2
137	11	PADZZ	5961-00-911-6015	81349	JAN2N3251A	TRANSISTOR	EA	1
137	12	PADZZ	5961-00-925-3777	81349	JAN2N2907A	TRANSISTOR	EA	1
137	13	PADZZ	5905-00-106-1249	81349	RCR07G510JS	RESISTOR	EA	2
137	14	PADZZ	5905-00-141-0717	81349	RCR07G473JS	RESISTOR,FIXED,COMP	EA	1
137	15	PADZZ	5905-00-116-8555	81349	RCR07G153JS	RESISTOR,FIXED,COMP	EA	1
137	16	PADZZ	5905-00-106-1356	81349	RCR07G152JS	RESISTOR,FIXED,COMP	EA	2
137	17	PADZZ	5905-00-119-3504	81349	RCR07G273JS	RESISTOR,FIXED,COMP	EA	2
137	18	PADZZ	5905-00-114-0710	81349	RCR07G331JS	RESISTOR,FIXED,COMP	EA	1
137	19	PADZZ	5905-00-106-3666	81349	RCR07G103JS	RESISTOR,FIXED,COMP	EA	2
137	20	PADZZ	5905-00-110-7622	81349	RCR07G682JS	RESISTOR,FIXED,COMP	EA	1
137	21	PADZZ		02735	CA3075F	MICROCIRCUIT,LINEAR SILICON MONOLITHIC FM IF SYSTEM	EA	1
137	22	PADZZ		07047	A-10044DAP BLK	INSULATOR,DISK	EA	2
137	23	XDDZZ		80063	SM-D-921304	COVER ASSY	EA	1

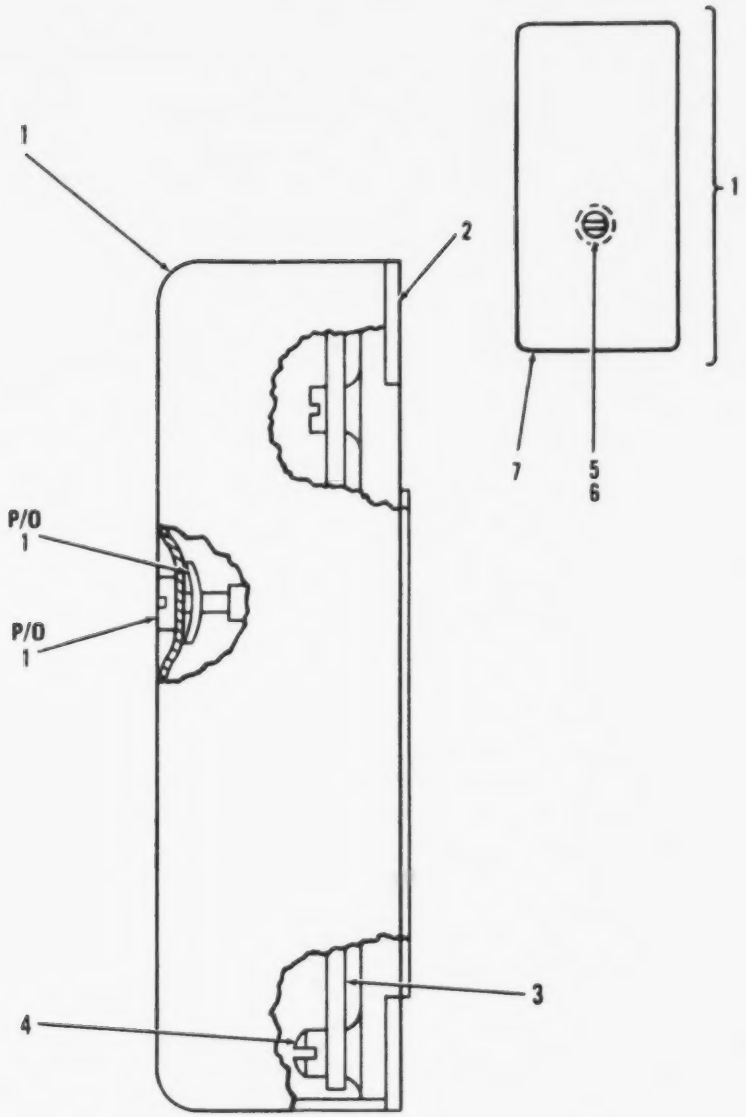

Figure 138. Amplifier, Audio, Audio and Squelch Pre-Amp Assembly.

(1) ILLUSTRATION (a) FIG NO	(1) ILLUSTRATION (b) ITEM NO	(2) SMR CODE	(3) NATIONAL STOCK NUMBER	(4) FSCM	(5) PART NUMBER	(6) DESCRIPTION USABLE ON CODE	(7) U/M	(8) QTY INC IN UNIT
						GROUP 010303 AMPLIFIER AUDIO (AUDIO AND SQUELCH PRE-AMP ASSY) A4300A SM-D-921316		
138	1	XDDDD		80063	SM-B-413789	COVER ASSY	EA	1
138	2	XDDZZ		80063	SM-D-413787	BASE	EA	1
138	3	XDDDL		80063	SM-D-921317	AMPL ASSY	EA	1
138	4	PADZZ	5305-00-855-0970	96906	MS24629-12	SCREW,TAPPING,THREA	EA	1
138	5	PADZZ	5305-00-855-0962	96906	MS24629-3	SCREW,TAPPING,THREA	EA	1
138	6	PAFZZ	5305-00-988-5747	83486	43-04-04120CD PL	SCREW,ASSEMBLED WAS	EA	1
138	7	PAFZZ		78553	C-18695SS-012	FASTENER,SH SPR	EA	1
138	8	XDDZZ		80063	SM-C-413791	COVER	EA	1

LEGEND

REF DES	ITEM NO	REF DES	ITEM NO	REF DES	ITEM NO	REF DES	ITEM NO
C4301	1	Q4302	5	R4303	8	R4307	11
C4302	2	Q4303	5	R4304	9	R4308	12
C4303	3	R4301	6	R4305	10	R4309	13
C4304	2	R4302	7	R4306	8	R4310	10
Q4301	4						

PREFIX ALL REFERENCE DESIGNATIONS WITH A4000AA4300A

EL6J8205

Figure 139. Amplifier Assembly (Sheet 1 of 2).

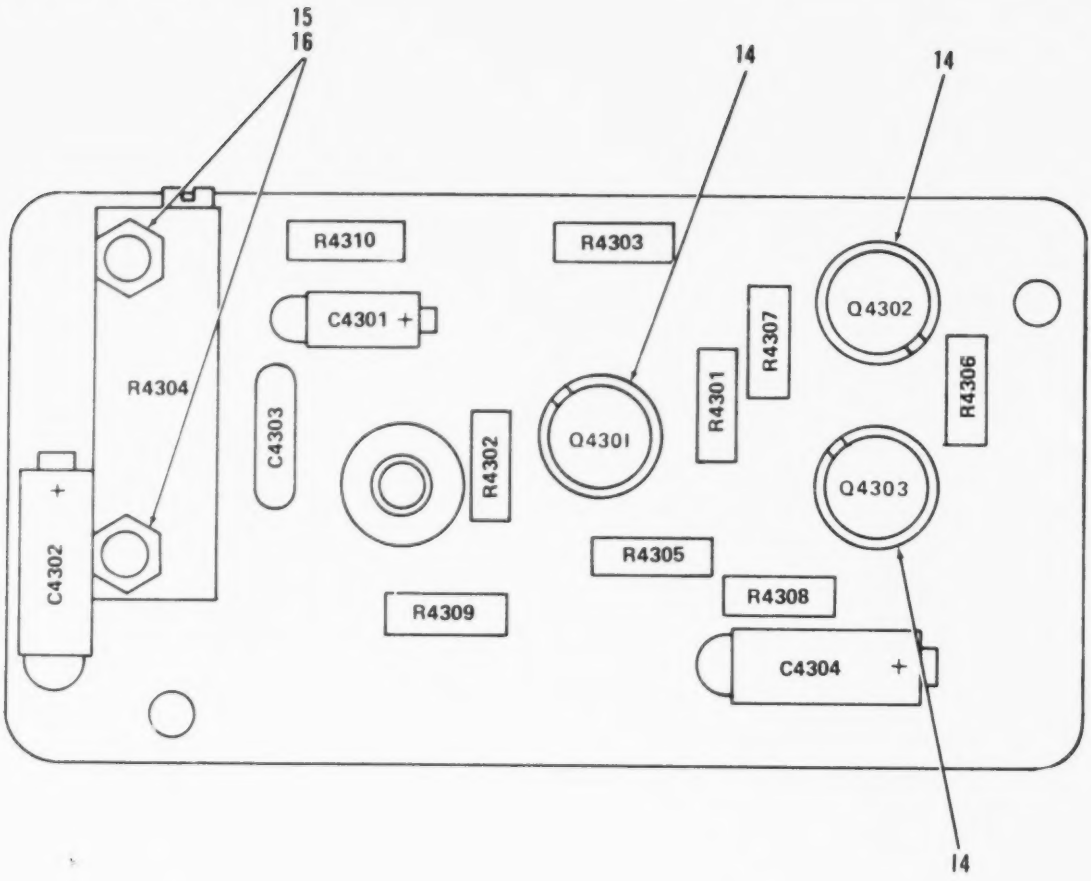

PREFIX ALL REFERENCE DESIGNATIONS WITH A4000AA4300A

EL6JB026

Figure 139. Amplifier Assembly (Sheet 2 of 2).

(1) ILLUSTRATION (a) FIG NO	(1) ILLUSTRATION (b) ITEM NO	(2) SMR CODE	(3) NATIONAL STOCK NUMBER	(4) FSCM	(5) PART NUMBER	(6) DESCRIPTION / USABLE ON CODE	(7) U/M	(8) QTY INC IN UNIT
						GROUP 01030301 AMPLIFIER ASSY		
139	1	PADZZ	5910-00-185-9045	81349	M39003/01-3000	CAPACITOR,FIXED,ELE	EA	1
139	2	PADZZ	5910-00-007-2003	81349	M39003/01-3009	CAPACITOR,FIXED,ELE	EA	2
139	3	PADZZ		81349	CK61BX331M	CAPACITOR,CER DIEL	EA	1
139	4	PADZZ	5961-00-951-8757	81349	JAN2N2222A	TRANSISTOR	EA	1
139	5	PADZZ	5961-00-925-3777	81349	JAN2N2907A	TRANSISTOR	EA	2
139	6	PADZZ	5905-00-110-0388	81349	RCR07G104JS	RESISTOR,FIXED,COMP	EA	1
139	7	PADZZ	5905-00-485-4545	81349	RCR07G334JS	RESISTOR,FIXED,COMP	EA	1
139	8	PADZZ	5905-00-126-6683	81349	RCR07G332JS	RESISTOR,FIXED,COMP	EA	2
139	9	PADZZ	5905-00-682-1330	32997	220W-1-102	RESISTOR,VARIABLE,W 1100 OHMS MAX	EA	1
139	10	PADZZ	5905-00-114-0711	81349	RCR07G472JS	RESISTOR,FIXED,COMP	EA	2
139	11	PADZZ	5905-00-107-0656	81349	RCR07G100JS	RESISTOR,FIXED,COMP	EA	1
139	12	PADZZ	5905-00-116-2394	81349	RCR07G511JS	RESISTOR,FIXED,COMP	EA	1
139	13	PADZZ	5905-00-120-9154	81349	RCR07G471JS	RESISTOR,FIXED,COMP	EA	1
139	14	PADZZ		07047	A-10044DAP BLK	INSULATOR,DISK	EA	3
139	15	PADZZ	5305-00-989-0682	96906	MS35206-205	SCREW,MACHINE	EA	2
139	16	PADZZ	5310-01-100-6991	30655	F92-1660-26	NUT,SELF-LOCKING,HE	EA	2

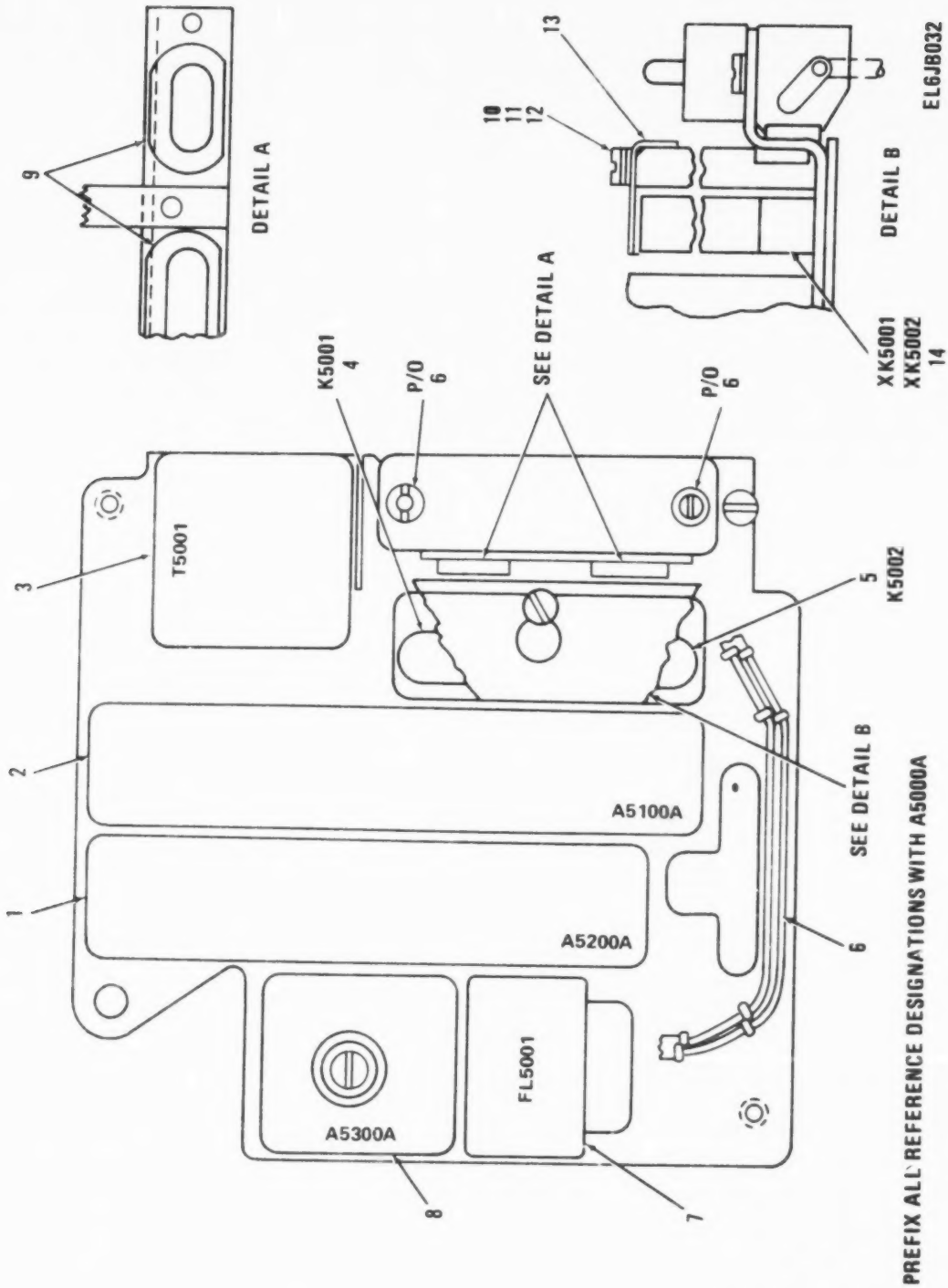

Figure 140. Amplifier Assembly IF, Audio and Squelch Amplifier (Sheet 1 of 3).

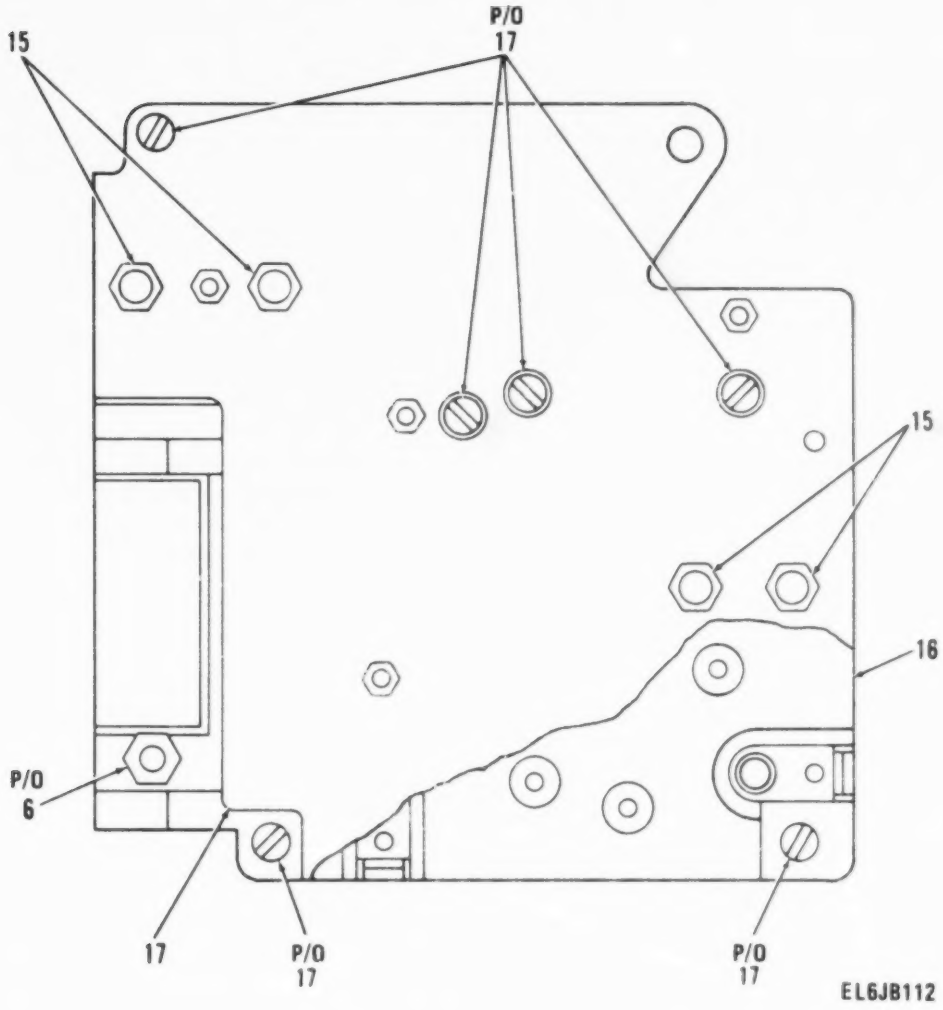

Figure 140. Amplifier Assembly IF, Audio and Squelch (Sheet 2 of 3).

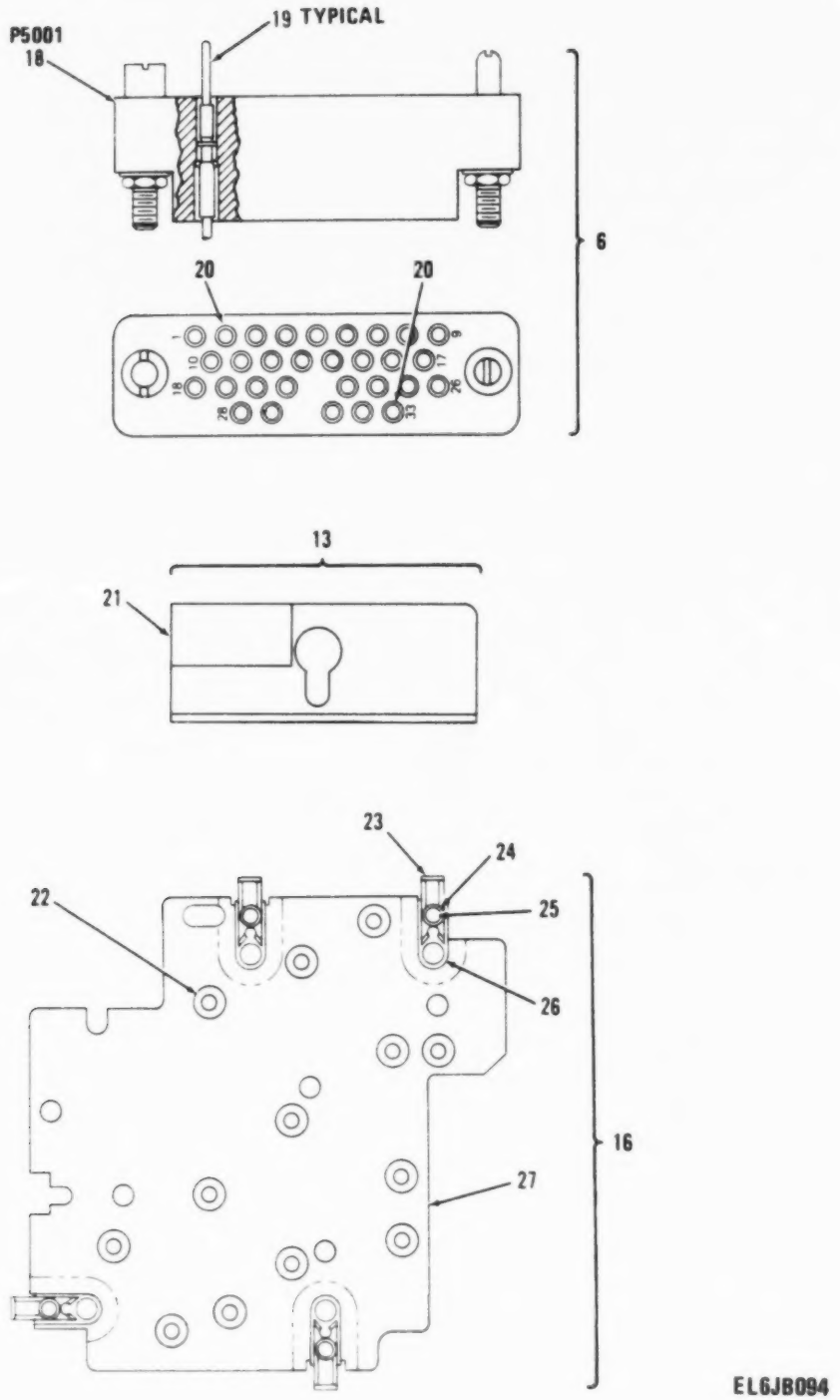

Figure 140. Amplifier Assembly IF, Audio and Squelch Amplifier (Sheet 3 of 3).

(1) ILLUSTRATION (a) FIG NO	(1) ILLUSTRATION (b) ITEM NO	(2) SMR CODE	(3) NATIONAL STOCK NUMBER	(4) FSCM	(5) PART NUMBER	(6) DESCRIPTION USABLE ON CODE	(7) U/M	(8) QTY INC IN UNIT
						GROUP 0104 AMPLIFIER ASSY,IF (AUDIO AND SQUELCH AMPLIFIER A5000 AND A5000A SM-D-413820		
140	1	PAFDL	5820-01-092-8097	80063	SM-C-921347	AMPLIFIER,SQUELCH	EA	1
140	2	PAFDL	5820-01-093-1925	80063	SM-C-921332	AMPLIFIER,AUDIO FRE	EA	1
140	3	PAFZZ	5950-00-854-2814	80045	812020	TRANSFORMER,AUDIO F 1 WATT MAX PWR LEVEL 500 TO 3000 HZ,175 VDCW	EA	1
140	4	PAFZZ	5945-00-853-5945	82050	BR8-600A1-F1-26V	RELAY,ELECTROMAGNET DPDT,FORM C,32 VDC MAX,600 OHMS PORM 10 PCT COIL RES	EA	1
140	5	PAFZZ	5945-00-853-5946	04221	95-3559	RELAY,ELECTROMAGNET DPDT,FORM C,30 VDC MAX,1000 PORM 5 PCT OHMS COIL RES	EA	1
140	6	ADDDD		80063	SM-D-413829	WIRING HARNESS ASSY	EA	1
140	7	PAFZZ	5915-00-853-6400	80045	812029	FILTER,LOW PASS 600 OHMS PORM 10 PCT AT 1KHZ INPUT/OUTPUT IMPD,15 MILLIW PWR	EA	1
140	8	PAFZZ	5915-01-092-8065	80063	SM-C-921362	FILTER,BAND PASS	EA	1
140	9	PAHZZ	5325-00-276-4993	76348	GB221	GROMMET,NONMETALLIC	EA	2
140	10	PAFZZ	5305-00-889-2997	96906	MS35206-215	SCREW,MACHINE	EA	1
140	11	PAFZZ	5310-00-543-2410	96906	MS35338-40	WASHER,LOCK	EA	1
140	12	PAFZZ	5310-00-951-4679	96906	MS27183-3	WASHER,FLAT	EA	1
140	13	PAFZZ	5340-01-124-1469	80063	SM-B-413933	BRACKET ASSEMBLY	EA	1
140	14	PAHZA	5935-00-901-4718	05574	000300 3315	SOCKET,PLUG-IN ELEC 8 SOCKET TYPE CONTACTS	EA	2
140	15	PAFZZ	5310-00-582-9176	30655	F92-1660-40	NUT,SELF-LOCKING,HE	EA	2
140	16	PAFFF	5999-00-853-6378	80063	SM-D-413876	PLATE,ELECTRICAL SM	EA	1
140	17	PAHHH	5820-01-102-7727	80063	SM-D-413879	CHASSIS ASSEMBLY	EA	1
140	18	PAHZZ	5935-00-853-6838	05574	000401-0014	CONNECTOR BODY,RECE 36 CONTACTS,500 V RMS WORKING VOLTAGE	EA	1
140	19	PAHZA		05574	020-009-000	PLUG,TIP	EA	28
140	20	PAHZA	5999-00-853-6860	80063	SM-C-413832-2	CONTACT,ELECTRICAL	EA	2
140	21	XBFZZ		80063	SM-B-414302-4	PAD,RUBBER	EA	1
140	22	PAFZZ	3120-00-897-6873	80063	SM-B-413554	BUSHING,SLEEVE	EA	13
140	23	PAFZZ	5325-00-262-9130	88447	38881-L	LATCH,SNAPSLIDE FAS	EA	4
140	24	XAFZZ		88447	38891-W	WASHER,SPR TNSN	EA	4
140	25	XAFZZ		88447	38901-R	RIVET,TUBULAR	EA	4
140	26	XAFZZ		88447	38871-G-2	GUIDE	EA	4
140	27	XBFZZ		80063	SM-D-413878	PLATE,SHIELD	EA	1

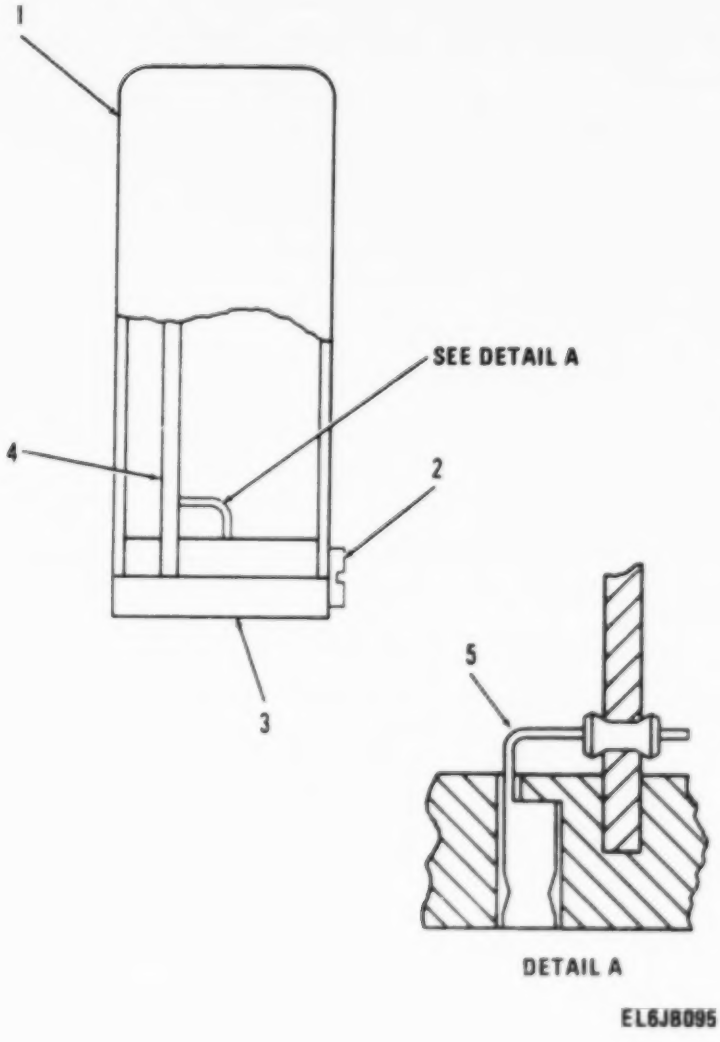

Figure 141. Amplifier, Audio Frequency Assembly, RCVR Audio Amplifier.

SECTION V

(1) ILLUSTRATION (a) FIG NO	(b) ITEM NO	(2) SMR CODE	(3) NATIONAL STOCK NUMBER	(4) FSCM	(5) PART NUMBER	(6) DESCRIPTION [illegible]	[illegible]	[illegible]
						GROUP [illegible] AMPLIFIER,[illegible] [illegible] [illegible] [illegible] [illegible] [illegible] [illegible] [illegible] [illegible] [illegible]		
141	1	XDDZZ		80063	SM-C-413938	COVER.....	[illegible]	[illegible]
141	2	PADZZ	5305-00-152-0544	80063	SM-B-413537	SCREW,MACHINE.....	[illegible]	[illegible]
141	3	XDDZZ		80063	SM-D-413936	BASE.....	[illegible]	[illegible]
141	4	XDDDD		80063	SM-D-921333	AMPLIFIER ASSY,AF.....	[illegible]	[illegible]
141	5	XDDZA		80063	SM-C-413576	CONTACT,ELEC.....	[illegible]	[illegible]

LEGEND

REF DES	ITEM NO	REF DES	ITEM NO	REF DES	ITEM NO	REF DES	ITEM NO
CR5101	1	C5105	5	R5101	12	R5111	20
CR5102	1	C5106	5	R5102	13	R5112	21
CR5103	1	C5107	6	R5103	14	R5113	21
CR5104	2	C5108	7	R5104	15	R5114	22
CR5105	1	C5109	8	R5105	16	R5115	23
C5101	3	Q5101	9	R5106	14	R5116	22
C5102	4	Q5102	10	R5107	17	R5117	24
C5103	4	Q5103	9	R5109	18	R5118	21
C5104	3	Q5104	11	R5110	19		

PREFIX ALL REFERENCE DESIGNATIONS WITH A5000AA5100A

EL6J8203

Figure 142. Amplifier Assembly, Radio Frequency (Sheet 1 of 3).

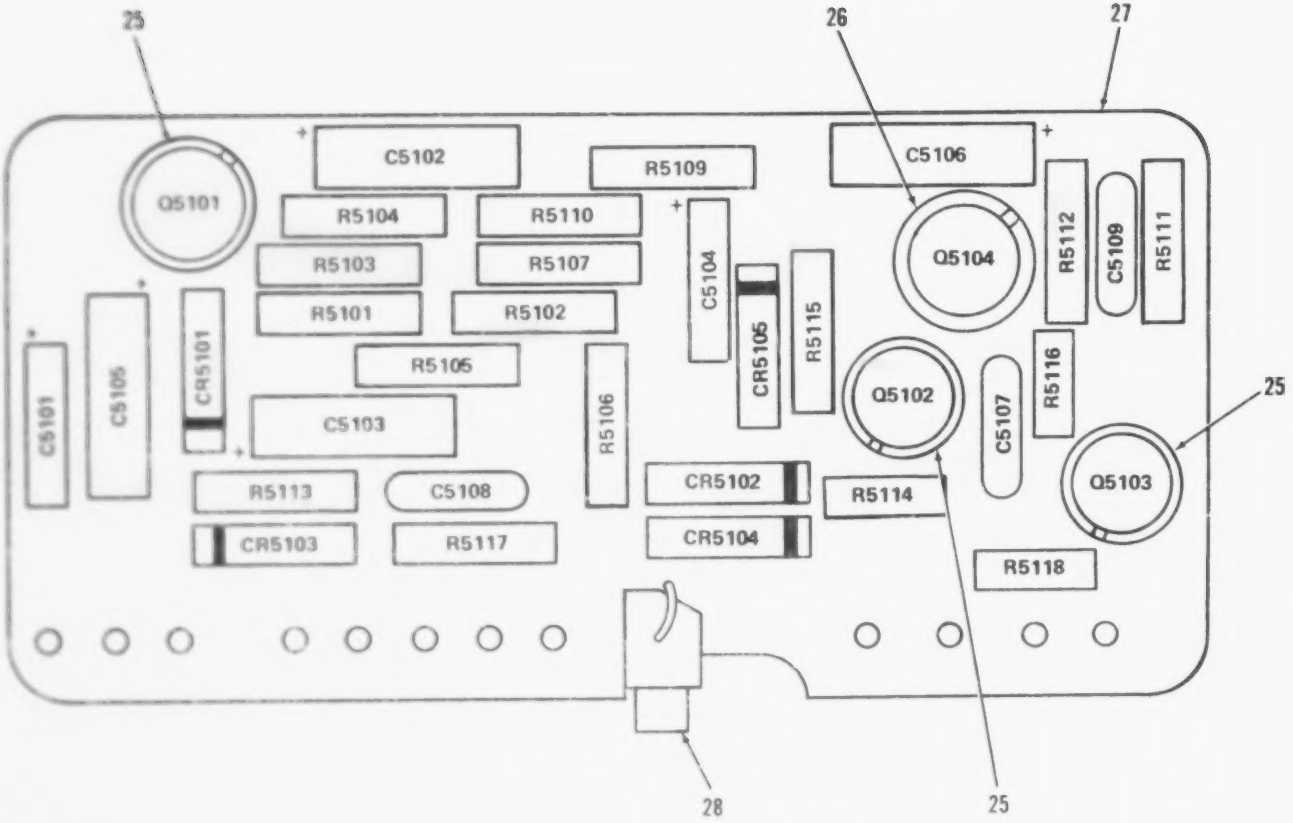

PREFIX ALL REFERENCE DESIGNATIONS WITH A5000AA5100A

EL6JB033

Figure 142. Amplifier Assembly, Radio Frequency (Sheet 2 of 3).

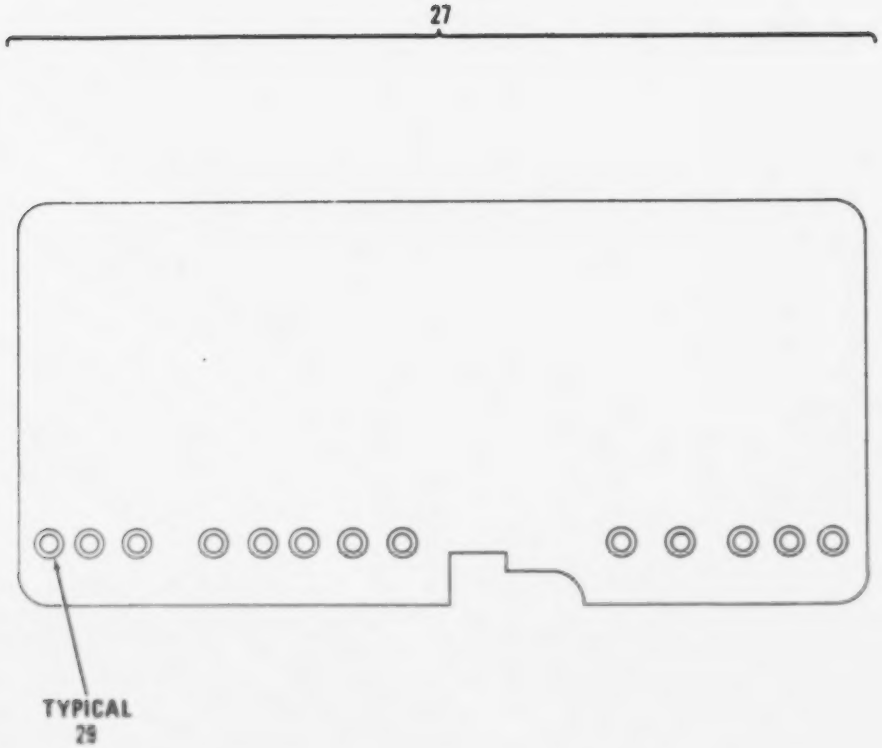

Figure 142. Amplifier Assembly, Radio Frequency (Sheet 3 of 3).

(1) ILLUSTRATION (a) FIG NO	(1) ILLUSTRATION (b) ITEM NO	(2) SMR CODE	(3) NATIONAL STOCK NUMBER	(4) FSCM	(5) PART NUMBER	(6) DESCRIPTION / USABLE ON CODE	(7) U/M	(8) QTY INC IN UNIT
						GROUP 01040101 AMPLIFIER ASSY,RADIO FREQ		
142	1	PADZZ	5961-00-087-6047	81349	JAN1N645	SEMICONDUCTOR DEVIC	EA	4
142	2	PADZZ	5961-00-921-3781	04713	1N4001	SEMICONDUCTOR DEVIC	EA	1
142	3	PADZZ	5910-00-185-9045	81349	M39003/01-3000	CAPACITOR,FIXED,ELE	EA	2
142	4	PADZZ	5910-00-007-2003	81349	M39003/01-3009	CAPACITOR,FIXED,ELE	EA	2
142	5	PADZZ	5910-00-113-5475	81349	M39003/01-3006	CAPACITOR,FIXED,ELE	EA	2
142	6	PADZZ	5910-00-892-3027	80063	SM-C-413567-1	CAPACITOR,FIXED,CER .001 UF,PORM 20 PCT 100 VDCW	EA	1
142	7	PADZZ	5910-0[illegible]-857-5305	18796	855-222X5S0-103M	CAPACITOR,FIXED,CER .01 UF,PORM 20 PCT,100 VDCW	EA	1
142	8	PADZZ		72982	855-511X5S0332M	CAPACITOR,CER DIEL .0033 UF,PORM 20 PCT,100 VDCW	EA	1
142	9	PADZZ	5961-00-925-3777	81349	JAN2N2907A	TRANSISTOR	EA	2
142	10	PADZZ	5961-00-951-8757	81349	JAN2N2222A	TRANSISTOR	EA	1
142	11	PADZZ	5961-00-949-1440	81349	JAN2N2905A	TRANSISTOR	EA	1
142	12	PADZZ	5905-00-111-4727	81349	RCR07G272JS	RESISTOR,FIXED,COMP	EA	1
142	13	PADZZ	5905-00-115-2261	81349	RCR07G912JS	RESISTOR,FIXED,COMP	EA	1
142	14	PADZZ	5905-00-105-7768	81349	RCR07G561JS	RESISTOR,FIXED,COMP	EA	2
142	15	PADZZ	5905-00-121-9932	81349	RCR07G391JS	RESISTOR,FIXED,COMP	EA	1
142	16	PADZZ	5905-00-105-7764	81349	RCR07G222JS	RESISTOR,FIXED,COMP	EA	1
142	17	PADZZ	5905-00-131-1255	81349	RCR07G122JS	RESISTOR,FIXED,COMP	EA	1
142	18	PADZZ	5905-00-110-7622	81349	RCR07G682JS	RESISTOR,FIXED,COMP	EA	1
142	19	PADZZ	5905-00-116-8555	81349	RCR07G153JS	RESISTOR,FIXED,COMP	EA	1
142	20	PADZZ	5905-00-114-5343	81349	RCR07G182JS	RESISTOR,FIXED,COMP	EA	1
142	21	PADZZ	5905-00-135-3975	81349	RCR07G680JS	RESISTOR,FIXED,COMP	EA	3
142	22	PADZZ	5905-00-110-7620	81349	RCR07G102JS	RESISTOR,FIXED,COMP	EA	1
142	23	PADZZ	5905-00-141-1183	81349	RCR07G101JS	RESISTOR,FIXED,COMP	EA	1
142	24	PADZZ	5905-00-106-1248	81349	RCR07G162JS	RESISTOR,FIXED,COMP	EA	1
142	25	PADZZ	5970-00-989-8333	07047	A-10042	INSULATOR,DISK	EA	3
142	26	PADZZ	5999-00-713-0913	07047	10012-0AP	MOUNTING PAD,ELECTR	EA	1
142	27	XDDDD		80063	SM-C-921335	CIRCUIT BD ASSY	EA	1
142	28	XDDZZ		80063	SM-B-374974	TERMINAL,STUD	EA	1
142	29	XDDZZ		70528	4535-060	EYELET,MTLC	EA	13

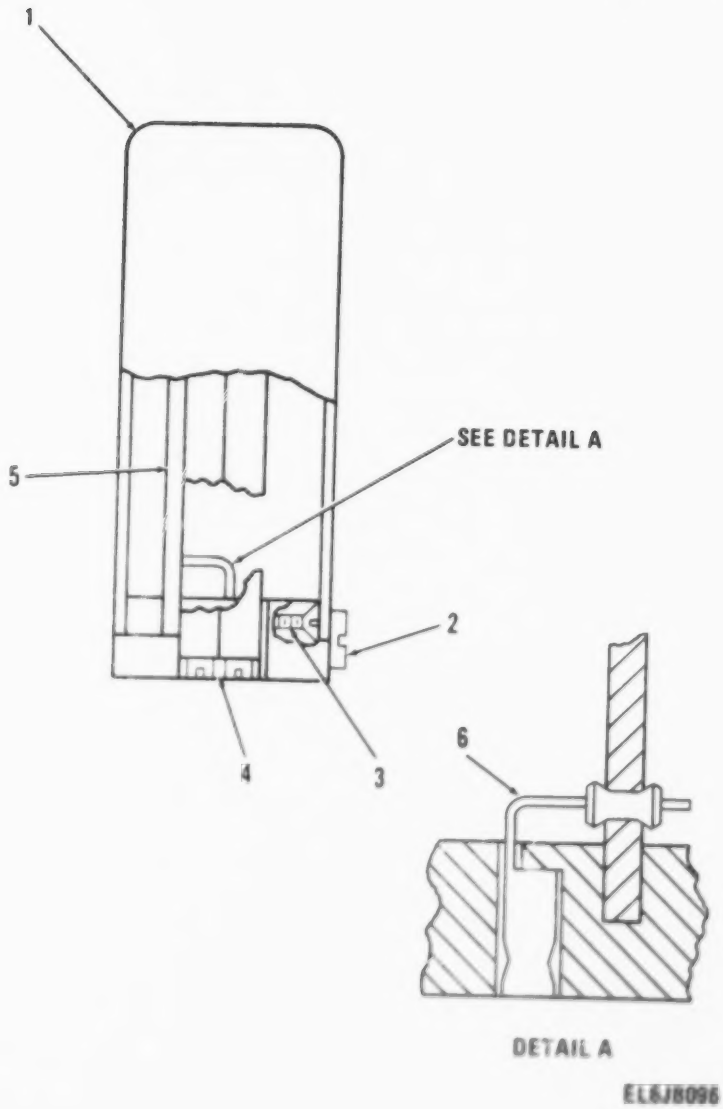

Figure 143. Amplifier, Limiter, RCVR Squelch Amplifier

(1) ILLUSTRATION (a) FIG NO	(1) ILLUSTRATION (b) ITEM NO	(2) SMR CODE	(3) NATIONAL STOCK NUMBER	(4) FSCM	(5) PART NUMBER	(6) DESCRIPTION USABLE ON CODE	(7) U/M	(8) QTY INC IN UNIT
						GROUP 010402 AMPLIFIER,LIMITER (RCVR SQUELCH AMPLIFIER) A5200A SM-C-921347		
143	1	XDDZZ		80063	SM-C-413853	COVER	EA	1
143	2	PADZZ	5305-00-152-0546	80063	SM-B-413837	SCREW,MACHINE	EA	1
143	3	PADZZ	5305-00-151-6889	80063	SM-B-413852	SCREW,MACHINE	EA	1
143	4	XDDZZ		80063	SM-D-413851	BASE	EA	1
143	5	XDDDD		80063	SM-D-921348	SQUELCH AMPL ASSY	EA	1
143	6	XDDZA		80063	SM-C-413574	CONTACT,ELEC	EA	10

LEGEND

REF DES	ITEM NO	REF DES	ITEM NO	REF DES	ITEM NO	REF DES	ITEM NO
CR5201	1	C5205	8	R5207	18	R5220	25
CR5202	2	C5206	9	R5208	18	R5221	24
CR5203	2	Q5201	10	R5209	19	R5222	26
CR5204	2	Q5202	10	R5210	20	R5223	19
CR5205	2	Q5203	10	R5211	16	R5224	23
CR5206	3	Q5204	10	R5212	17	R5225	27
CR5207	4	Q5205	11	R5213	17	R5226	28
CR5208	3	R5201	12	R5214	21	R5227	28
CR5209	3	R5202	13	R5215	16	R5228	29
C5201	5	R5203	14	R5216	22	R5229	30
C5202	5	R5204	15	R5217	23	R5230	30
C5203	6	R5205	16	R5218	23	U5201	31
C5204	7	R5206	17	R5219	24		

PREFIX ALL REFERENCE DESIGNATIONS WITH A5000AA5200A

EL6JB206

Figure 144. Direct Current Amplifier Assembly (Sheet 1 of 2).

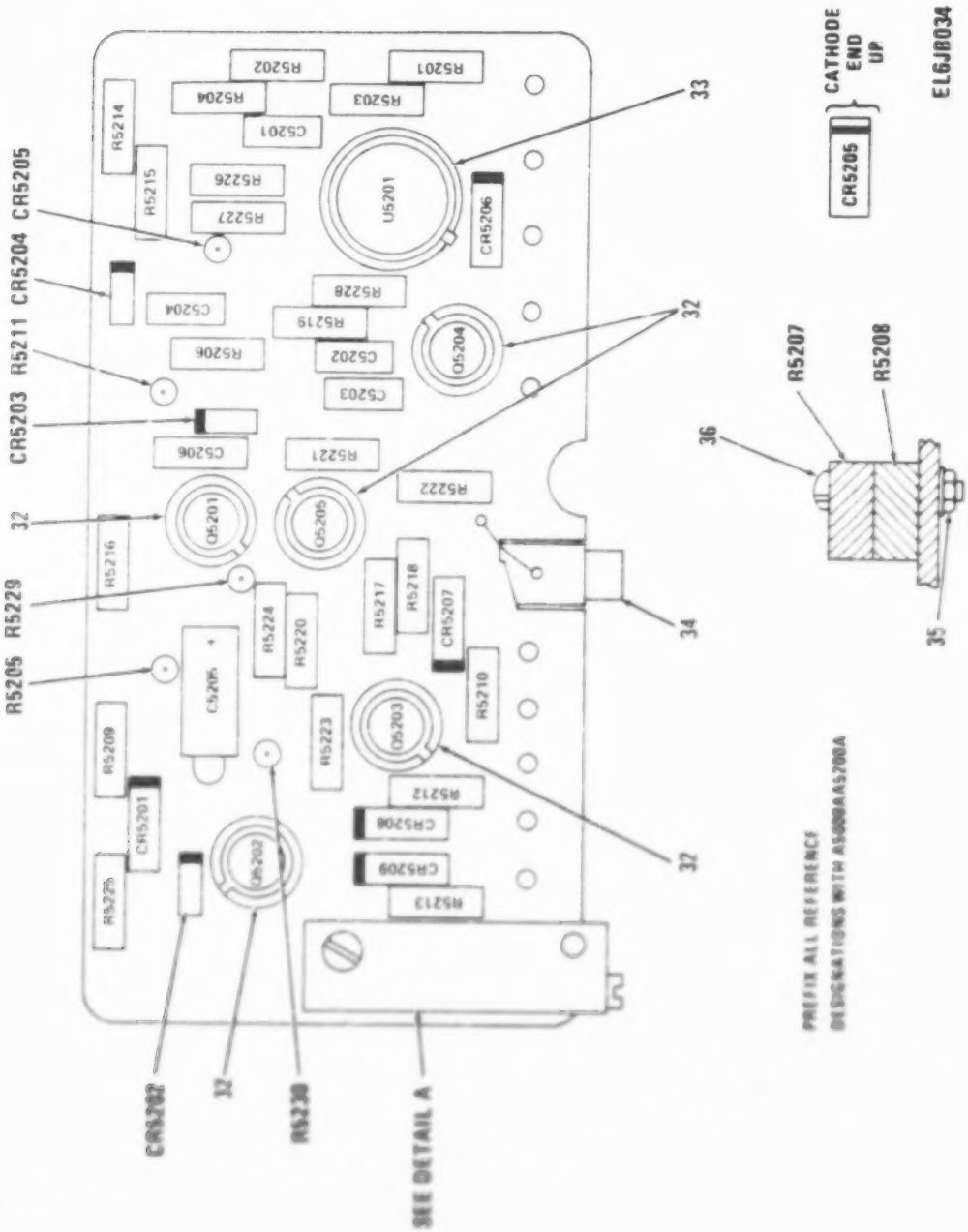

Figure 144. Direct Current Amplifier Assembly (Sheet 2 of 2).

(1) ILLUSTRATION		(2)	(3)	(4)	(5)	(6)	(7)	(8)
(a) FIG NO	(b) ITEM NO	SMR CODE	NATIONAL STOCK NUMBER	FSCM	PART NUMBER	DESCRIPTION USABLE ON CODE	U/M	QTY INC IN UNIT
						GROUP 01040201 DIRECT CURRENT AMP ASSY		
144	1	PADZZ	5961-00-995-2310	81349	JAN1N752A	SEMICONDUCTOR DEVIC..	EA	1
144	2	PADZZ	5961-00-938-1135	81349	JAN1N4148	SEMICOND DVC,DIODE..	EA	4
144	3	PADZZ	5961-00-087-6047	81349	JAN1N645	SEMICONDUCTOR DEVIC..	EA	1
144	4	PADZZ	5961-00-833-3043	81349	JAN1N757A	SEMICONDUCTOR DEVIC..	EA	1
144	5	PADZZ	5910-00-010-8717	81349	M39014/01-1593	CAPACITOR,FIXED,CER..	EA	2
144	6	PADZZ	5910-00-113-5278	81349	M39014/01-1587	CAPACITOR,FIXED,CER..	EA	1
144	7	PADZZ	5910-00-010-8666	81349	M39014/01-1357	CAPACITOR,FIXED,CER..	EA	1
144	8	PADZZ	5910-00-113-5475	81349	M39003/01-3006	CAPACITOR,FIXED,ELE..	EA	1
144	9	PADZZ	5910-00-113-5286	81349	M39014/02-1356	CAPACITOR,FIXED,CER..	EA	1
144	10	PADZZ	5961-00-951-8757	81349	JAN2N2222A	TRANSISTOR..	EA	4
144	11	PADZZ	5961-00-925-3777	81349	JAN2N2907A	TRANSISTOR..	EA	1
144	12	PADZZ	5905-00-114-5343	81349	RCR07G182JS	RESISTOR,FIXED,COMP..	EA	1
144	13	PADZZ	5905-00-120-9154	81349	RCR07G471JS	RESISTOR,FIXED,COMP..	EA	1
144	14	PADZZ	5905-00-110-0388	81349	RCR07G106JS	RESISTOR,FIXED,COMP..	EA	1
144	15	PADZZ	5905-00-600-4528	81349	RCR07G124JS	RESISTOR,FIXED,COMP..	EA	1
144	16	PADZZ	5905-00-119-3504	81349	RCR07G273JS	RESISTOR,FIXED,COMP..	EA	1
144	17	PADZZ	5905-00-141-0717	81349	RCR07G473JS	RESISTOR,FIXED,COMP..	EA	1
144	18	PADZZ	5905-00-820-6359	32997	220W-1-203	RESISTOR,VARIABLE,W 20200 OHMS MAX............................	EA	2
144	19	PADZZ	5905-00-110-7620	81349	RCR07G102JS	RESISTOR,FIXED,COMP..	EA	1
144	20	PADZZ	5905-00-141-0742	81349	RCR07G181JS	RESISTOR,FIXED,COMP..	EA	1
144	21	PADZZ	5905-00-116-8556	81349	RCR07G105JS	RESISTOR,FIXED,COMP..	EA	1
144	22	PADZZ	5905-00-121-9932	81349	RCR07G[illegible]91JS	RESISTOR,FIXED,COMP..	EA	1
144	23	PADZZ	5905-00-106-3666	81349	RCR07G103JS	RESISTOR,FIXED,COMP..	EA	1
144	24	PADZZ	5905-00-141-0746	81349	RCR07G562JS	RESISTOR,FIXED,COMP..	EA	2
144	25	PADZZ	5905-00-113-6860	81349	RCR07G270JS	RESISTOR,FIXED,COMP..	EA	1
144	26	PADZZ	5905-00-126-6609	81349	RCR07G392JS	RESISTOR,FIXED,COMP..	EA	1
144	27	PADZZ	5905-00-116-8555	81349	RCR07G153JS	RESISTOR,FIXED,COMP..	EA	1
144	28	PADZZ	5905-00-106-1278	81349	RCR07G123JS	RESISTOR,FIXED,COMP..	EA	2
144	29	PADZZ	5905-00-111-1678	81349	RCR07G564JS	RESISTOR,FIXED,COMP..	EA	1
144	30	PADZZ	5905-00-116-4559	81349	RCR07G333JS	RESISTOR,FIXED,COMP..	EA	1
144	31	PADZZ		81349	JM38510/10102[illegible]	MICROCIRCUIT,LIN..	EA	1
144	32	PADZZ		[illegible]	A-[illegible]	INSULATOR,DISK..	EA	[illegible]
144	33	PADZZ	5961-00-966-7737	[illegible]	7717-20-D[illegible]	MOUNTING PAD,[illegible]..	EA	1
144	34	PADZZ		[illegible]	SM-B-[illegible]	TERMINAL..	EA	[illegible]
144	35	PADZZ	5310-00-934-9751	96906	MS35649-222	NUT,PLAIN,HEXAGON..	EA	[illegible]
144	36	PADZZ	5305-00-956-8858	96906	MS35206-[illegible]	SCREW,MACHINE..	EA	[illegible]

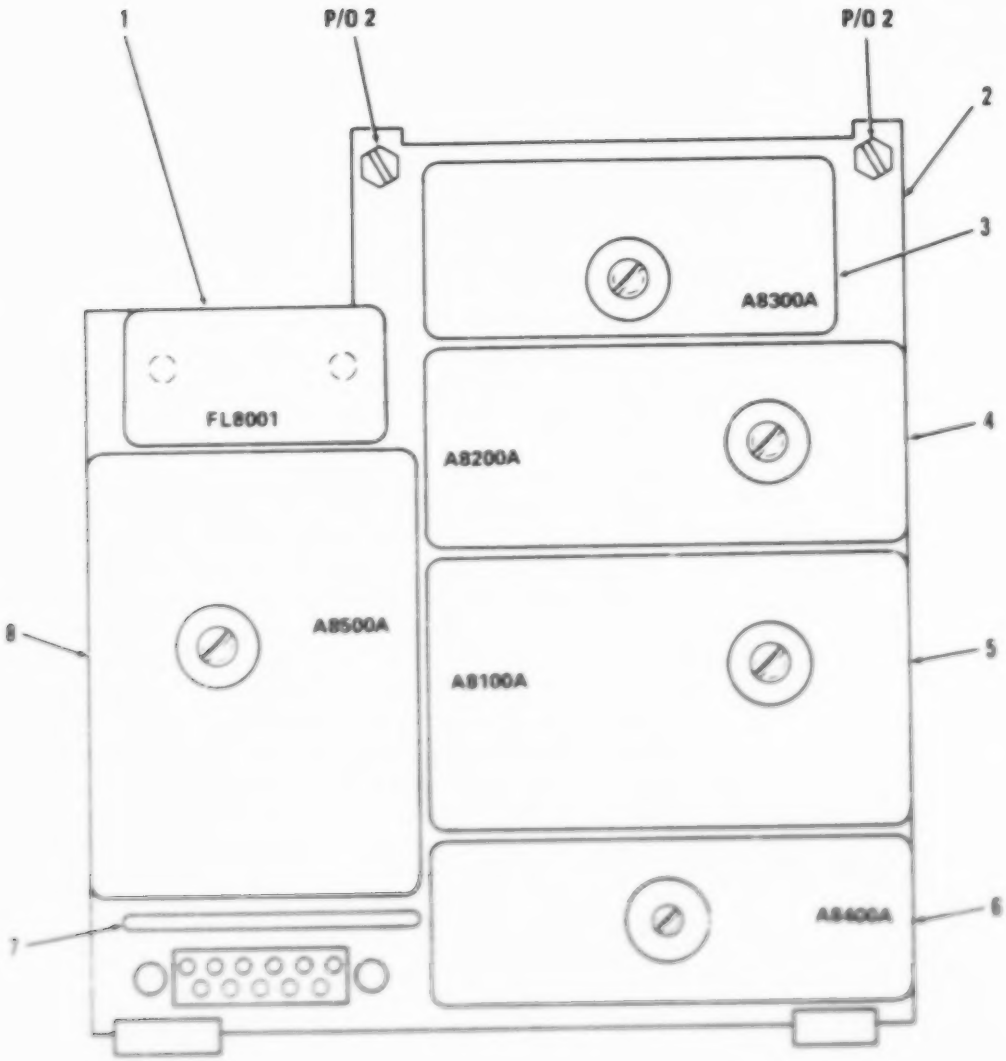

Figure 146. Transmitter Speech Amplifier and Modulator Assembly (Sheet 1 of 3).

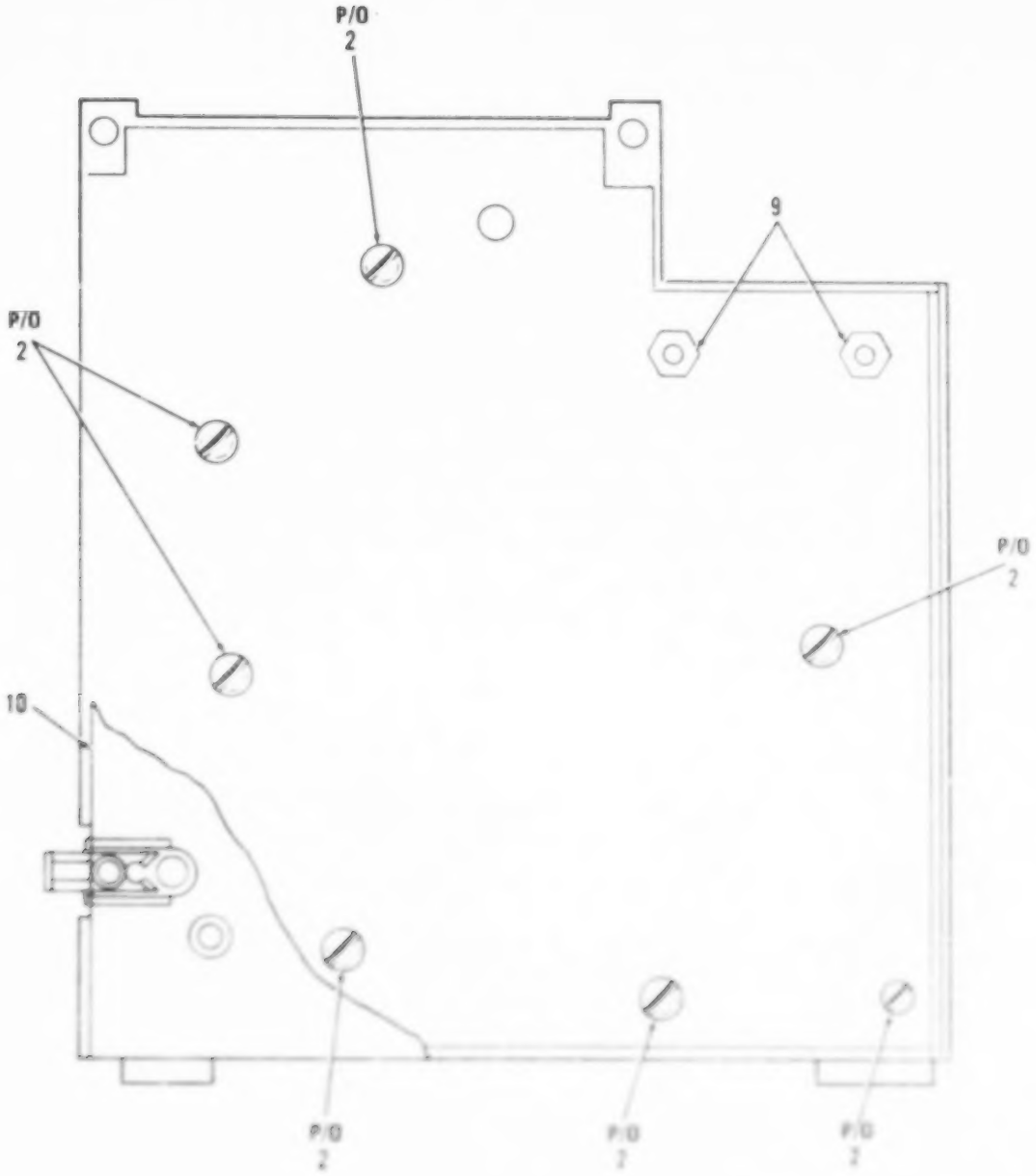

Figure 116. Transmitter Speech Amplifier and Modulator Assembly (sheet 2 of 3)

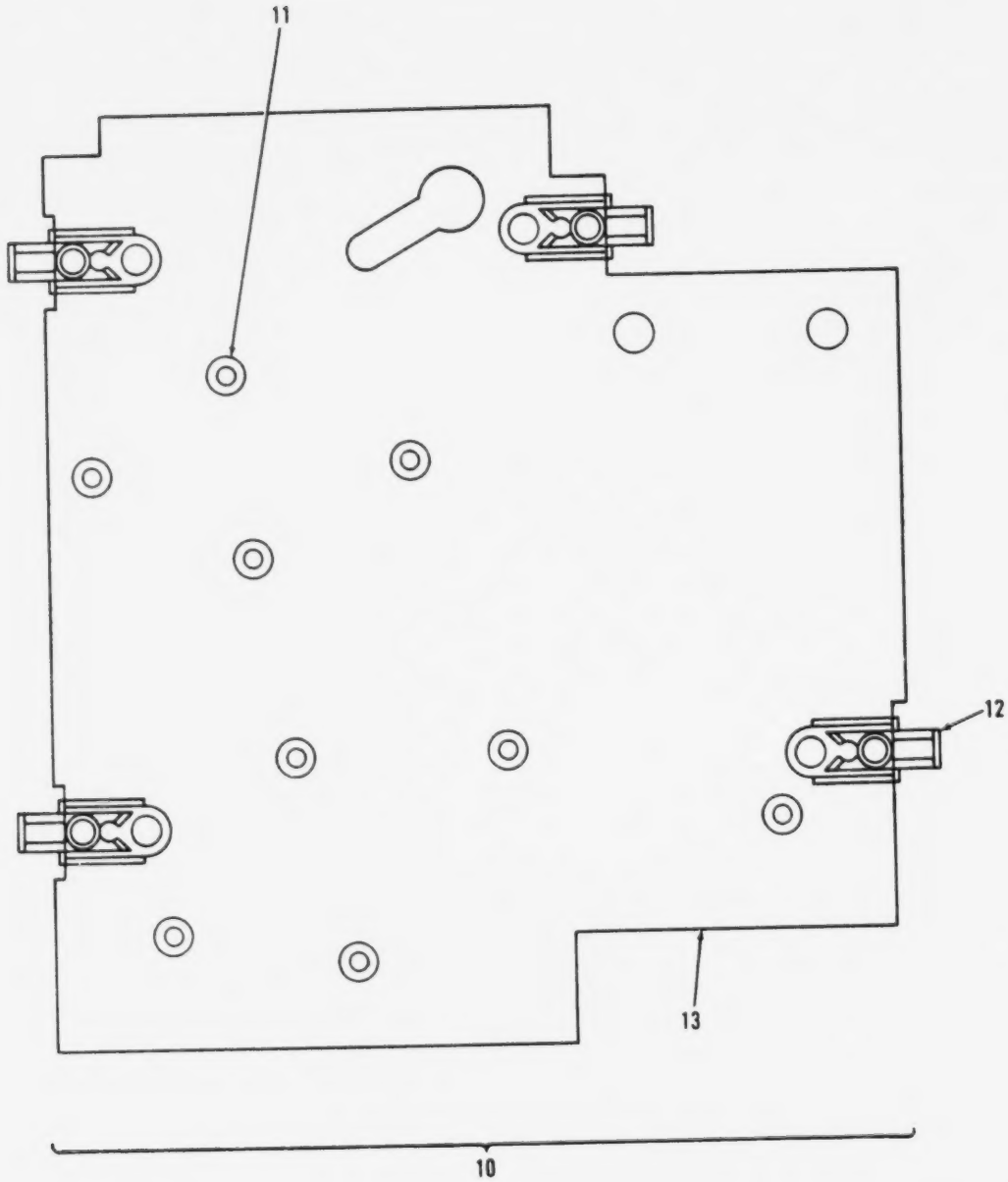

Figure 146. Transmitter Speech Amplifier and Modulator Assembly (Sheet 3 of 3).

best copy available

(1) ILLUSTRATION (a) FIG NO	(b) ITEM NO	(2) SMR CODE	(3) NATIONAL STOCK NUMBER	(4) FSCM	(5) PART NUMBER	(6) DESCRIPTION / USABLE ON CODE	(7) U/M	(8) QTY INC IN UNIT
						GROUP 0105 TRANSMITTER SPEECH AMPLI-FIER AND MODULATOR ASSY A8000 AND A8000A SM-C-414170		
146	1	PAFZZ	5915-00-892-3011	80063	SM-C-414172	FILTER,LOW PASS 50-3000 HZ FREQ RANGE,600 OHMS INPUT AND OUTPUT IMPEDANCE	EA	1
146	2	PAFDD	5820-00-884-9960	80063	SM-C-414276	PRINTED CIRCUIT BOA	EA	1
146	3	PAFDL	5820-00-884-2478	80063	SM-B-414197	ONE&TWO,IF,AMPL,ASY	EA	1
146	4	PAFDL		80063	SM-B-921451	PHASE DISCR ASSY	EA	1
146	5	PAFZZ	5310-00-950-1310	96906	MS27183-4	WASHER,FLAT	EA	1
146	6	PAFDL	5820-00-884-2475	80063	SM-B-374963	HUNT GENERATOR ASSY	EA	1
146	7	PAFZZ	5910-01-126-4735	71590	YKF007-01L0P	CAPACITOR ASSY EIGHT .0012 UF PLUS 50 MINUS 20 PCT TOL,75 VDCW	EA	1
146	8	PAFDL	5820-00-884-2477	80063	SM-C-921485	AMPL SPEECH ASSY	EA	1
146	9	PAFZZ	5310-00-582-9176	30655	F92-1660-40	NUT,SELF-LOCKING,HE	EA	2
146	10	PAFFF	5999-00-823-3249	80063	SM-D-414273	PLATE,ELECTRICAL SH	EA	1
146	11	PAFZZ	3120-00-897-6873	80063	SM-B-413554	BUSHING,SLEEVE	EA	9
146	12	PAFZZ	5325-00-262-9130	88447	38881-L	LATCH,SNAPSLIDE FAS	EA	4
146	13	XBFZZ		80063	SM-D-414275	PLATE,SHIELD	EA	1

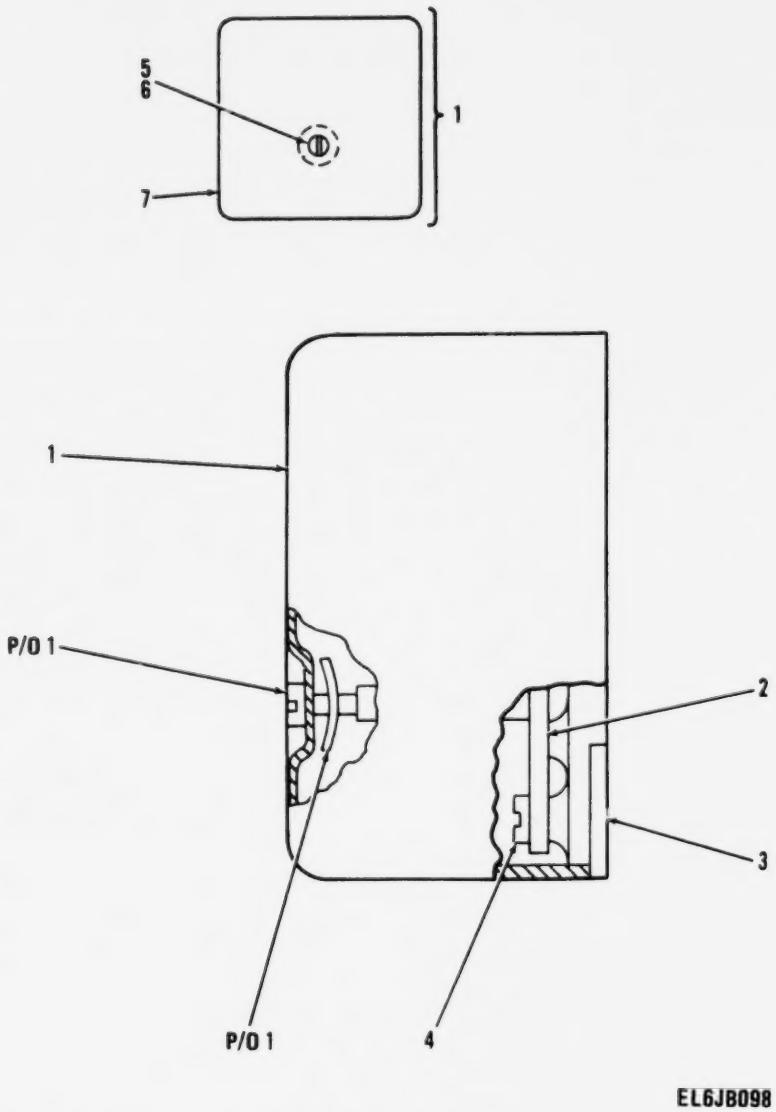

Figure 147. Modulator, Radio XMTR, 11.5 MHz Modulator Assembly.

(1) ILLUSTRATION (a) FIG NO	(1) ILLUSTRATION (b) ITEM NO	(2) SMR CODE	(3) NATIONAL STOCK NUMBER	(4) FSCM	(5) PART NUMBER	(6) DESCRIPTION / USABLE ON CODE	(7) U/M	(8) QTY INC IN UNIT
						GROUP 010501 MODULATOR,RADIO XMTR		
						(11.5 MHZ MODULATOR ASSY)		
						A8100 SM-B-414176		
						A9000A-1 SM-D-921507		
147	1	PAFZZ		80063	SM-B-414179	COVER ASSY	EA	1
147	2	XADDD		80063	SM-D-921437	MODULATOR ASSY	EA	1
147	3	PADZZ		80063	SM-D-414178	BASE	EA	1
147	4	PADZZ	5305-00-855-0962	96906	MS24629-3	SCREW,TAPPING,THREA	EA	2
147	5	PAFZZ	5305-00-988-5747	83486	43-04-04120CD PL	SCREW,ASSEMBLED WAS	EA	1
147	6	PAFZZ		78553	C-18695SS-012	FASTENER,SH SPR	EA	1
147	7	PADZZ		80063	SM-C-414181	COVER	EA	1

LEGEND

REF DES	ITEM NO	REF DES	ITEM NO	REF DES	ITEM NO	REF DES	ITEM NO
CR8101	1	C8107	10	Q8101	16	R8110	26
CR8102	2	C8108	11	Q8102	16	R8111	27
CR8103	2	C8109	12	Q8103	16	R8112	25
CR8104	3	C8110	5	R8101	17	R8113	23
CR8105	3	C8111	5	R8102	18	R8114	28
CR8106	3	C8112	11	R8103	19	R8115	28
C8101	4	C8113	5	R8104	20	R8116	29
C8102	5	C8114	13	R8105	21	R8117	19
C8103	6	C8115	13	R8106	22	R8118	30
C8104	7	C8116	14	R8107	23	T8101	31
C8105	8	C8117	12	R8108	24	Y8101	32
C8106	9	L8101	15	R8109	25		

PREFIX ALL REFERENCE DESIGNATIONS WITH A8000AA8100A

EL6JB208

Figure 148. Modulator, Radio Transmitter (Sheet 1 of 3).

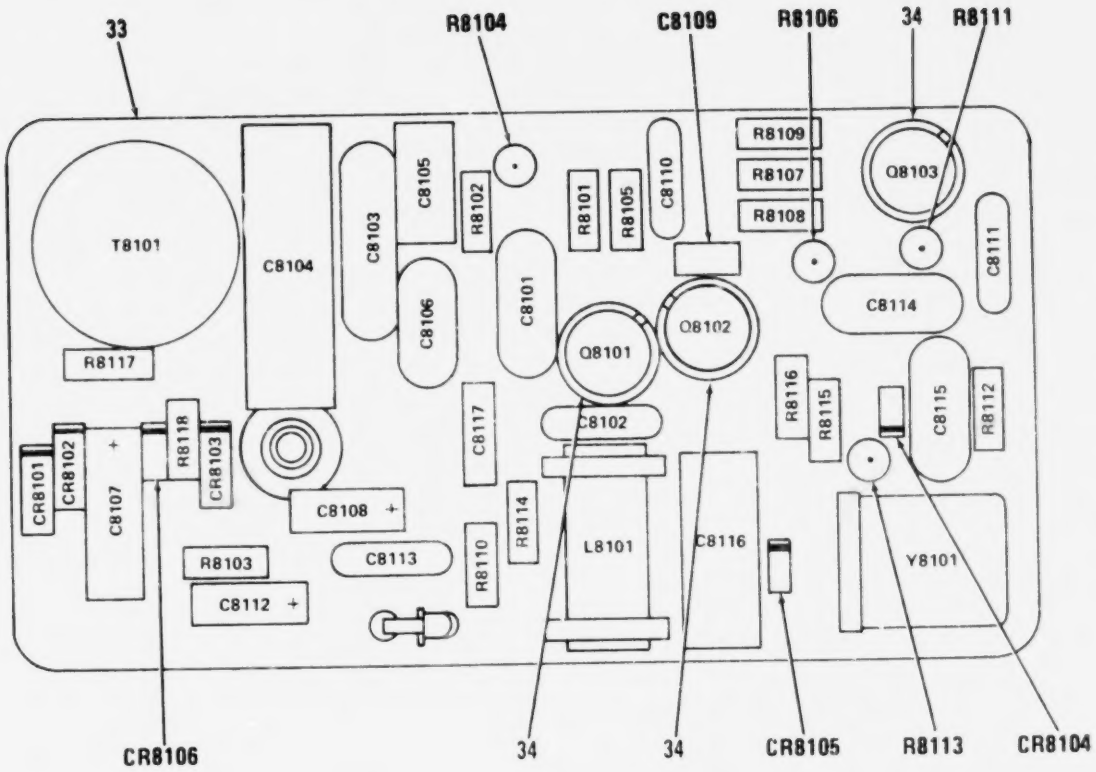

PREFIX ALL REFERENCE DESIGNATIONS WITH A8000AA8100A

EL6JB037

Figure 148. Modulator, Radio Transmitter (Sheet 2 of 3).

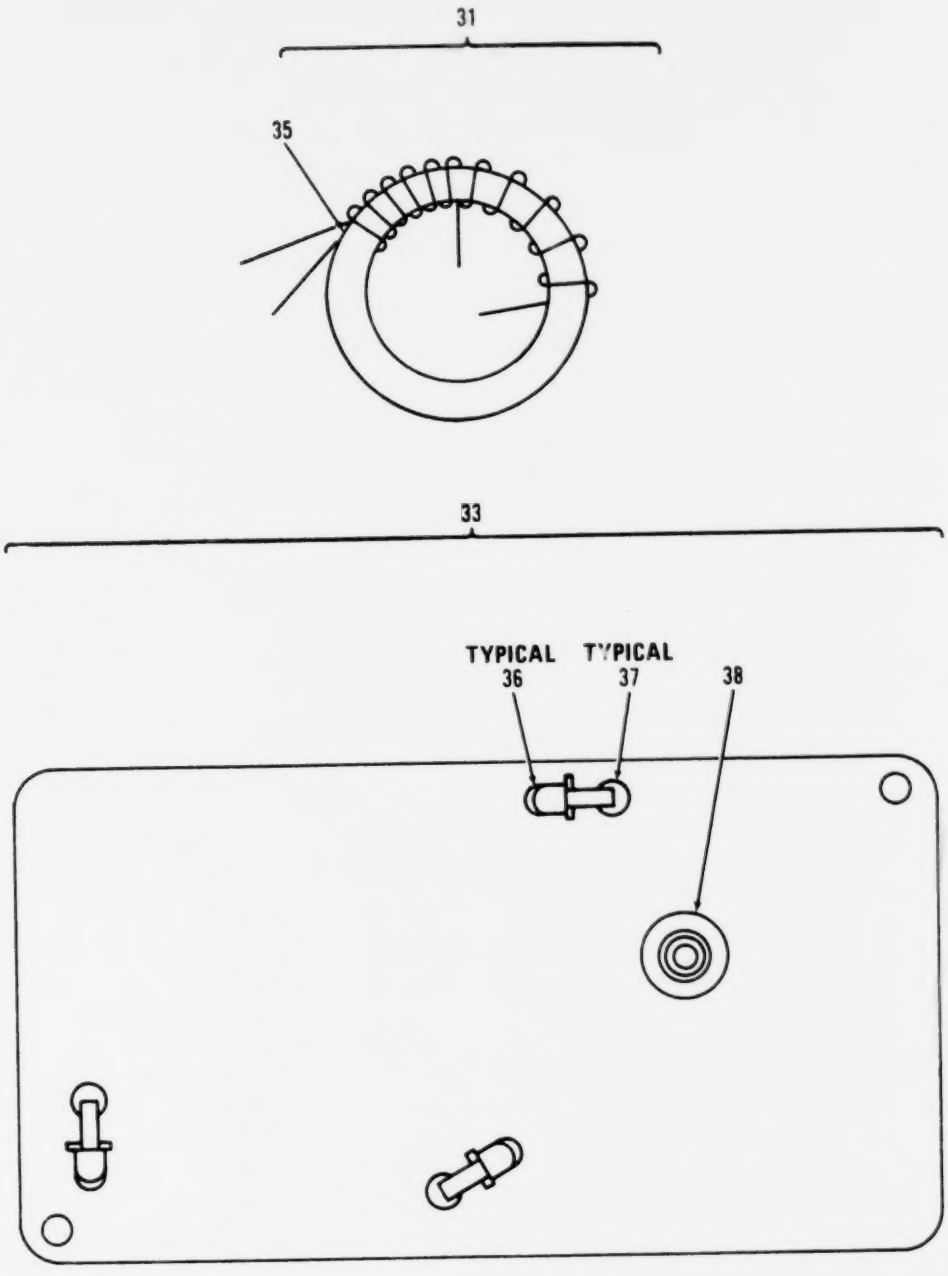

Figure 148. Modulator, Radio Transmitter (Sheet 3 of 3).

(1) ILLUSTRATION (a) FIG NO	(1) ILLUSTRATION (b) ITEM NO	(2) SMR CODE	(3) NATIONAL STOCK NUMBER	(4) FSCM	(5) PART NUMBER	(6) DESCRIPTION / USABLE ON CODE	(7) U/M	(8) QTY INC IN UNIT
						GROUP 01050101 MODULATOR,RADIO TRANSMITTER		
148	1	PADZZ	5961-00-995-2310	81349	JAN1N752A	SEMICONDUCTOR DEVIC	EA	1
148	2	PADZZ		16352	VVC354	SEMICOND DVC,DIODE VR 15 VDC,PD 500 MILLIW	EA	2
148	3	PADZZ	5961-00-938-1135	81349	JAN1N4148	SEMICOND DVC,DIODE	EA	3
148	4	PADZZ	5910-01-031-0447	81349	CMR05F331GODR	CAPACITOR,FIXED,MIC	EA	1
148	5	PADZZ	5910-00-890-0554	80063	SM-C-413567-3	CAPACITOR,FIXED,CER .0047 UF,PORM 20 PCT,100 VDCW	EA	4
148	6	PADZZ	5910-01-029-8906	81349	CMR06F102GODR	CAPACITOR,FIXED,MIC	EA	1
148	7	PADZZ	5910-00-938-1015	81349	PC51M160	CAPACITOR,VARIABLE	EA	1
148	8	PADZZ	5910-00-805-6628	81349	CC22SH360G	CAPACITOR,FIXED,CER	EA	1
148	9	PADZZ	5910-01-043-5772	81349	CMR05F271GODR	CAPACITOR,FIXED,MIC	EA	1
148	10	PADZZ	5910-00-007-2004	81349	M39003/01-3088	CAPACITOR,FIXED,ELE	EA	1
148	11	PADZZ	5910-00-201-0962	81349	M39003/01-3069	CAPACITOR,FIXED,ELE	EA	2
148	12	PADZZ	5910-00-010-8666	81349	M39014/01-1357	CAPACITOR,FIXED,CER	EA	2
148	13	PADZZ		93790	CM06FC511JN3	CAPACITOR,MICA DIEL	EA	2
148	14	PADZZ	5910-00-992-3306	81349	PC51J110	CAPACITOR,VARIABLE	EA	1
148	15	PADZZ		80063	SM-C-414194	REACTOR ASSY 18.8 UH PORM 5 PCT INDUCTANCE	EA	1
148	16	PADZZ	5961-00-911-6015	81349	JAN2N3251A	TRANSISTOR	EA	3
148	17	PADZZ	5905-00-126-6683	81349	RCR07G332JS	RESISTOR,FIXED,COMP	EA	1
148	18	PADZZ	5905-00-135-6046	81349	RCR07G681JS	RESISTOR,FIXED,COMP	EA	1
148	19	PADZZ	5905-00-106-3666	81349	RCR07G103JS	RESISTOR,FIXED,COMP	EA	2
148	20	PADZZ	5905-00-141-1183	81349	RCR07G[illegible]JS	RESISTOR,FIXED,COMP	EA	1
148	21	PADZZ	5905-00-131-1255	81349	RCR07G122JS	RESISTOR,FIXED,COMP	EA	1
148	22	PADZZ	5905-00-119-8768	81349	RCR07G821JS	RESISTOR,FIXED,COMP	EA	2
148	23	PADZZ	5905-00-106-1356	81349	RCR07G152JS	RESISTOR,FIXED,COMP	EA	1
148	24	PADZZ	5905-00-141-0744	81349	RCR07G562JS	RESISTOR,FIXED,COMP	EA	2
148	25	PADZZ	5905-00-135-3973	81349	RCR07G221JS	RESISTOR,FIXED,COMP	EA	1
148	26	PADZZ	5905-00-119-3504	81349	RCR07G273JS	RESISTOR,FIXED,COMP	EA	1
148	27	PADZZ	5905-00-119-3503	81349	RCR07G271JS	RESISTOR,FIXED,COMP	EA	2
148	28	PADZZ	5905-00-119-3505	81349	RCR07G683JS	RESISTOR,FIXED,COMP	EA	1
148	29	PADZZ	5905-00-141-0717	81349	RCR07G473JS	RESISTOR,FIXED,COMP	EA	1
148	30	PADZZ	5905-00-110-7620	81349	RCR07G102JS	RESISTOR,FIXED,COMP	EA	1
148	31	PADDD		80063	SM-C-414189	TRANSFORMER ASSY,RF 2.7 UH PORM .1 UH INDUCTANCE AT 7.90 MHZ PORM 100 KHZ	EA	1
148	32	XDDZZ		75351	ML18E 11.525MHZ	CRYSTAL UNIT 11.525 MHZ PORM .002 PCT FREQ AT 25 DEG C	EA	1
148	33	XADDD		80063	SM-D-921439	CIRCUIT BOARD ASSY	EA	1
148	34	PADZZ		07047	A-10044DAP BLK	INSULATOR,DISK	EA	3
148	35	PAFZZ		80063	SM-D-413689-2	CORE	EA	1
148	36	XDDZA		80063	SM-C-413574	CONTACT,ELEC	EA	3
148	37	XDDZZ		70528	453S-060	EYELET,MTLC	EA	3

(1) ILLUSTRATION (a) FIG NO	(1) ILLUSTRATION (b) ITEM NO	(2) SMR CODE	(3) NATIONAL STOCK NUMBER	(4) FSCM	(5) PART NUMBER	(6) DESCRIPTION / USABLE ON CODE	(7) U/M	(8) QTY INC IN UNIT
148	38	XOOZZ		80063	SM-C-413575-1	TERMINAL, STUD.....	EA	1

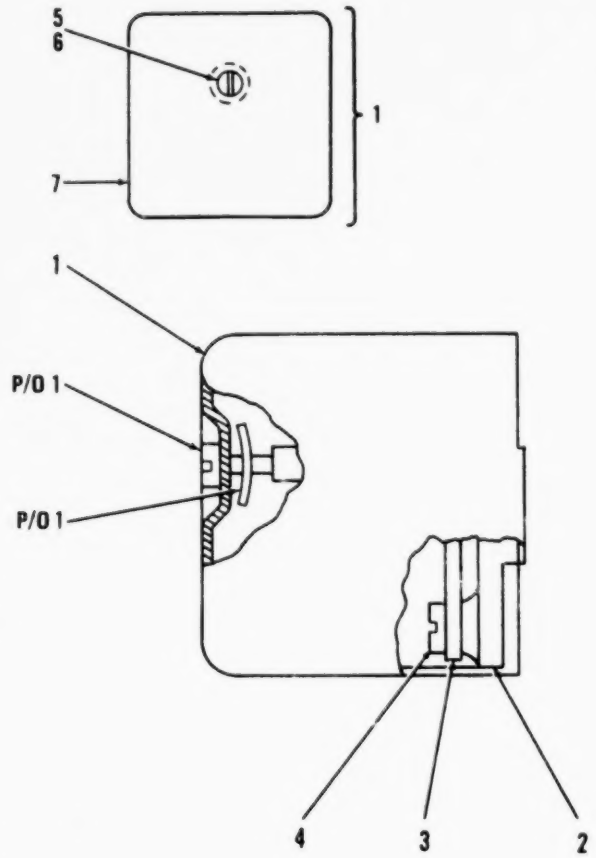

Figure 149. Transmitter Phase Discriminator Assembly.

(1) ILLUSTRATION (a) FIG NO	(1) ILLUSTRATION (b) ITEM NO	(2) SMR CODE	(3) NATIONAL STOCK NUMBER	(4) FSCM	(5) PART NUMBER	(6) DESCRIPTION / USABLE ON CODE	(7) U/M	(8) QTY INC IN UNIT
						GROUP 010502 TRANSMITTER PHASE DISCRIMINATOR ASSY A8200A SM-D-92145		
149	1	XDDDL		80063	SM-D-414218	COVER ASSY	EA	1
149	2	XDDZZ		80063	SM-D-414217	BASE	EA	1
149	3	XDDDD		80063	SM-D-921452	FREQUENCY CONT ASSY	EA	1
149	4	PADZZ	5305-00-855-0962	96906	MS24629-3	SCREW,TAPPING,THREA	EA	2
149	5	PADZZ	5305-00-988-5747	83486	43-04-04120CD PL	SCREW,ASSEMBLED WAS	EA	1
149	6	PADZZ		78553	C-1869555-012	FASTENER,SH SPR	EA	1
149	7	XDDZZ		80063	SM-C-414220	COVER	EA	1

LEGEND

REF DES	ITEM NO	REF DES	ITEM NO	REF DES	ITEM NO	REF DES	ITEM NO
CR8201	1	C8207	6	Q8202	13	R8209	21
CR8202	1	C8208	7	R8201	14	R8210	22
CR8203	1	C8209	8	R8202	15	R8211	16
C8201	2	C8210	9	R8203	16	R8212	15
C8202	3	C8211	3	R8204	17	R8213	14
C8203	3	C8212	10	R8205	18	T8201	23
C8204	3	L8201	11	R8206	19	T8202	24
C8205	4	L8202	12	R8207	20	T8203	25
C8206	5	Q8201	13	R8208	21	T8204	26

PREFIX ALL REFERENCE DESIGNATIONS WITH A8000AA8200A

EL6JB100

Figure 150. Frequency Control Assembly (Sheet 1 of 3).

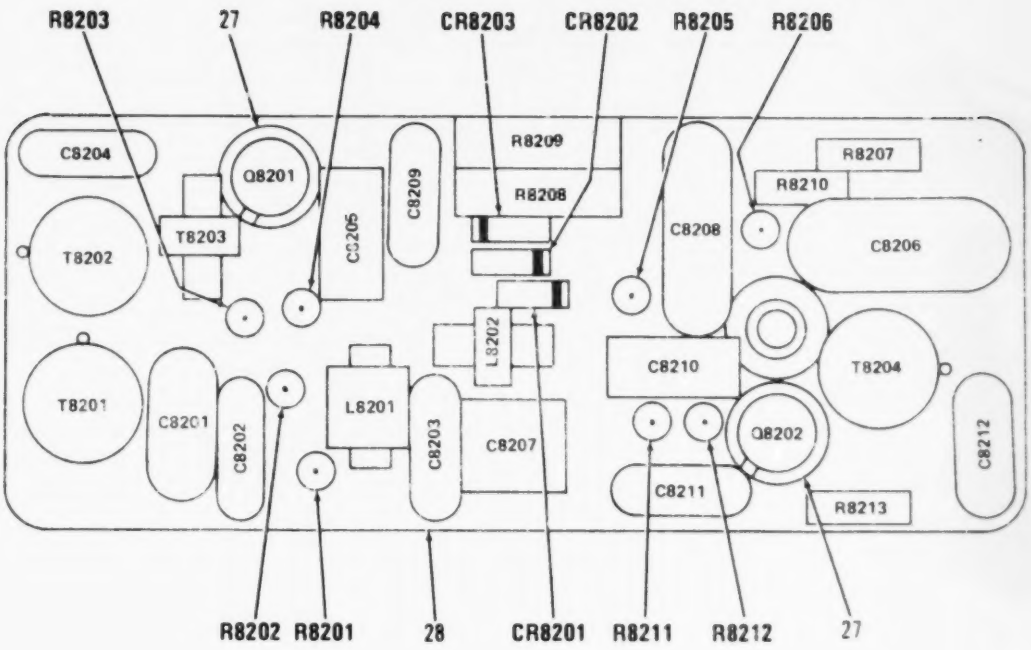

PREFIX ALL REFERENCE DESIGNATIONS WITH A8000AA8200A

EL6JB039

Figure 150. Frequency Control Assembly (Sheet 2 of 3).

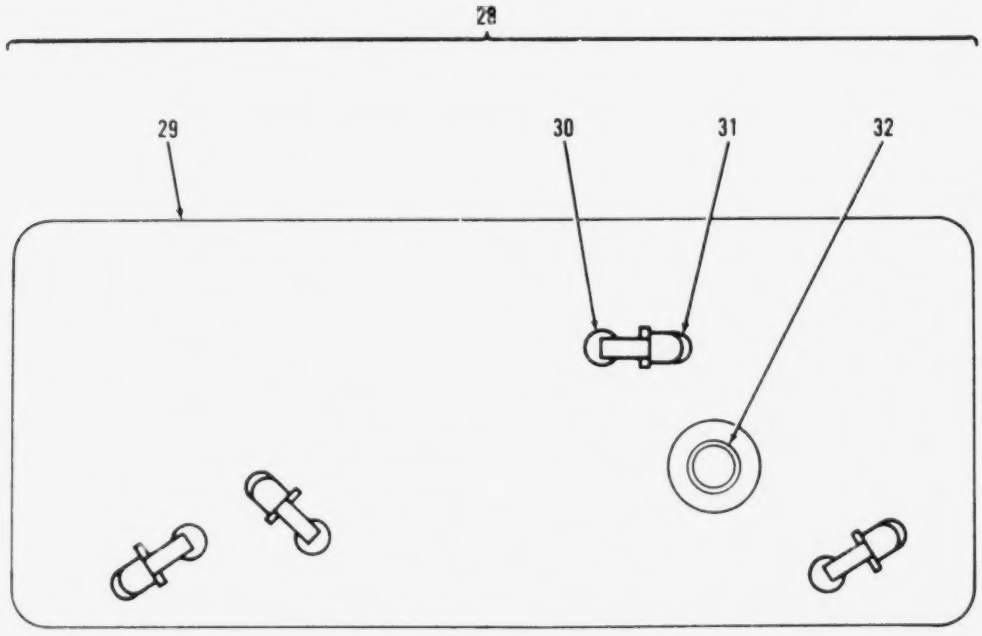

Figure 150. Frequency Control Assembly (Sheet 3 of 3).

(1) ILLUSTRATION (a) FIG NO	(1) ILLUSTRATION (b) ITEM NO	(2) SMR CODE	(3) NATIONAL STOCK NUMBER	(4) FSCM	(5) PART NUMBER	(6) DESCRIPTION USABLE ON CODE	(7) U/M	(8) QTY INC IN UNIT
						GROUP 01050201 FREQUENCY CONTRIL ASSY		
150	1	PADZZ	5961-00-938-1135	81349	JAN1N4148	SEMICOND DVC,DIODE	EA	3
150	2	PADZZ	5910-01-043-5772	81349	CMR05F271GODR	CAPACITOR,FIXED,MIC	EA	1
150	3	PADZZ		72982	855-511X5S0332M	CAPACITOR,CER DIEL .0033 UF PORM 20 PCT,100 VDCW	EA	4
150	4	PADZZ	5910-00-581-8492	81349	CC22UJ560G	CAPACITOR,FIXED,CER	EA	1
150	5	PADZZ	5910-01-040-1232	81349	CMR06F302GODR	CAPACITOR,FIXED,MIC	EA	1
150	6	PADZZ	5910-00-924-4307	81349	PC51J5R5	CAPACITOR,VARIABLE,	EA	1
150	7	PADZZ	5910-01-058-0229	81349	CMR06F162GODR	CAPACITOR,FIXED,MIC	EA	1
150	8	PADZZ	5910-01-043-6891	81349	CMR05E300GODR	CAPACITOR,FIXED,MIC	EA	1
150	9	PADZZ	5910-00-823-1339	81349	CC22UJ150G	CAPACITOR,FIXED,CER	EA	1
150	10	PADZZ	5910-01-031-0447	81349	CMR05F331GODR	CAPACITOR,FIXED,MIC	EA	1
150	11	PADZZ	5950-00-891-9158	80063	SM-C-413577	COIL,RADIO,FREQUEN 1 MILLIH INDUCTANCE,PORM 10 PCT	EA	1
150	12	XADZZ		80063	SM-C-414805	COIL ASSY CP 2.8 TO 3.6 UUF,RP 40 TO 70K OHMS AT 11.5 MHZ PORM 580 HZ	EA	1
150	13	PADZZ	5961-00-911-6015	81349	JAN2N3251A	TRANSISTOR	EA	2
150	14	PADZZ	5905-00-135-3974	81349	RCR07G431JS	RESISTOR,FIXED,COMP	EA	2
150	15	PADZZ	5905-00-131-1255	81349	RCR07G122JS	RESISTOR,FIXED,COMP	EA	2
150	16	PADZZ	5905-00-106-3666	81349	RCR07G103JS	RESISTOR,FIXED,COMP	EA	2
150	17	PADZZ	5905-00-110-7622	81349	RCR07G682JS	RESISTOR,FIXED,COMP	EA	1
150	18	PADZZ	5905-00-141-0717	81349	RCR07G473JS	RESISTOR,FIXED,COMP	EA	1
150	19	PADZZ	5905-00-119-3505	81349	RCR07G683JS	RESISTOR,FIXED,COMP	EA	1
150	20	PADZZ	5905-00-105-7764	81349	RCR07G222JS	RESISTOR,FIXED,COMP	EA	1
150	21	PADZZ	5905-01-024-0806	81349	RLR20C8252FR	RESISTOR,FIXED,FILM	EA	2
150	22	PADZZ	5905-00-104-8358	81349	RCR07G822JS	RESISTOR,FIXED,COMP	EA	1
150	23	PADZZ		80063	SM-D-414231	TRANSFORMER,RADIO F	EA	1
150	24	PADZZ	5950-01-011-3195	80063	SM-D-414233	TRANSFORMER,RADIO F	EA	1
150	25	XDDZZ		80063	SM-C-414228	TRANSFORMER ASSY,RF 31 UH,PORM 1.8 UH INDUCTANCE AT 2.5 MHZ PORM 130 HZ	EA	1
150	26	PADZZ		80063	SM-D-921455	TRANSFORMER ASSY,RF	EA	1
150	27	PADZZ		07047	A-10044DAP BLK	INSULATOR,DISK	EA	2
150	28	XDDDA		80063	SM-C-921454	CIRCUIT BOARD ASSY	EA	1
150	29	XDDZZ		80063	SM-D-921453	PRINTED CIRCUIT BD	EA	1
150	30	XDDZZ		70528	4535-060	EYELET,MTLC	EA	4
150	31	XDDZA		80063	SM-C-413574	CONTACT,ELEC	EA	4
150	32	XDDZZ		80063	SM-C-413575-1	TERMINAL,STUD	EA	1

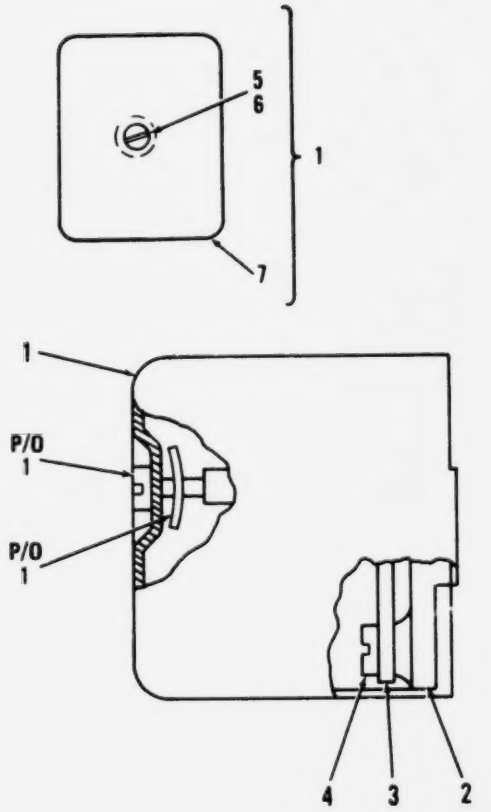

Figure 151. Transmitter, IF, 1st. and 2nd. IF Amplifier Assembly.

(1) ILLUSTRATION (a) FIG NO	(1) ILLUSTRATION (b) ITEM NO	(2) SMR CODE	(3) NATIONAL STOCK NUMBER	(4) FSCM	(5) PART NUMBER	(6) DESCRIPTION / USABLE ON CODE	(7) U/M	(8) QTY INC IN UNIT
						GROUP 010503 TRANSMITTER IF (1ST AND 2ND IF AMPLIFIER ASSY) A8300 AND A8300A SM-B-414197		
151	1	XDODL		80063	SM-B-414200	COVER ASSY	EA	1
151	2	XDDZZ		80063	SM-C-414199	BASE	EA	1
151	3	XDODA		80063	SM-D-414203	AMPLIFIER ASSY	EA	1
151	4	PADZZ	5305-00-855-0962	96906	MS24629-3	SCREW,TAPPING,THREA	EA	2
151	5	PADZZ	5305-00-988-5747	83486	43-04-04120CD PL	SCREW,ASSEMBLED WAS	EA	1
151	6	PADZZ		78553	C-18695SS-012	FASTENER,SH SPR	EA	1
151	7	XDDZZ		80063	SM-C-414202	COVER	EA	1

LEGEND

REF DES	ITEM NO	REF DES	ITEM NO	REF DES	ITEM NO	REF DES	ITEM NO
C8301	1	C8308	3	R8302	8	R8308	8
C8302	2	C8309	4	R8303	9	R8309	12
C8303	2	J8301	5	R8304	10	T8301	13
C8304	2	Q8301	6	R8305	11	T8302	14
C8306	2	Q8302	6	R8306	9	T8303	15
C8307	2	R8301	7	R8307	8		

EL6JB102

Figure 152. Amplifier Assembly (Sheet 1 of 3).

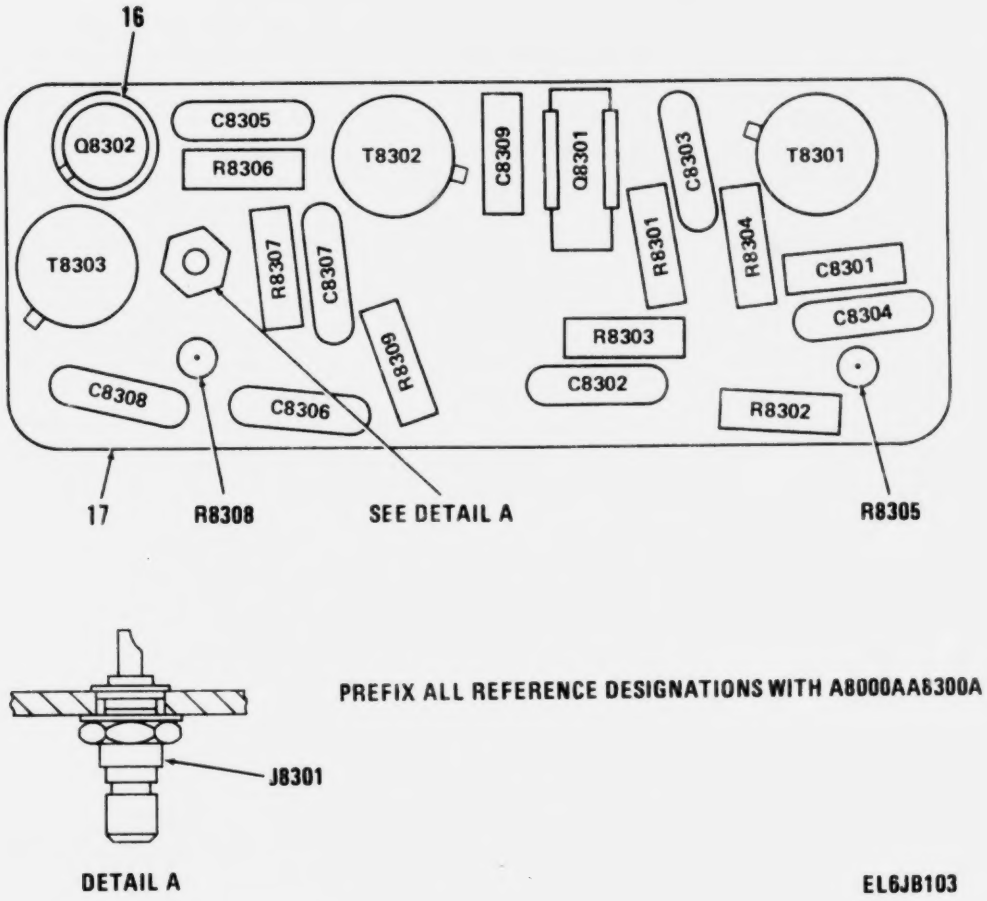

Figure 152. Amplifier Assembly (Sheet 2 of 3).

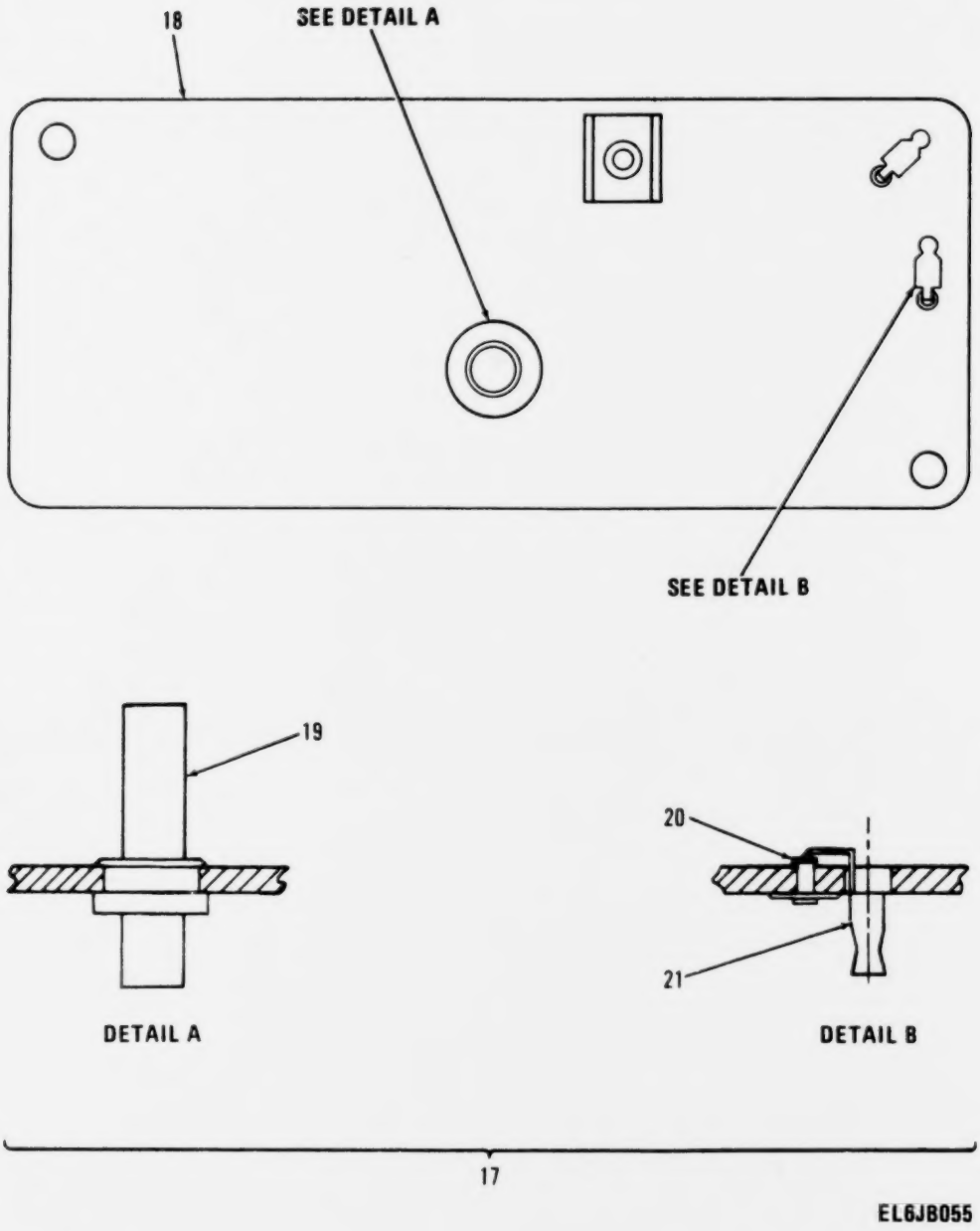

Figure 152. Amplifier Assembly (Sheet 3 of 3).

(1) ILLUSTRATION (a) FIG NO	(b) ITEM NO	(2) SMR CODE	(3) NATIONAL STOCK NUMBER	(4) FSCM	(5) PART NUMBER	(6) DESCRIPTION USABLE ON CODE	(7) U/M	(8) QTY INC IN UNIT
						GROUP 01050301 AMPLIFIER ASSY		
152	1	PADZZ	5910-00-805-6636	81349	CC22UK1R0C	CAPACITOR,FIXED,CER	EA	1
152	2	PADZZ	5910-00-857-5305	18796	855-222X5S0-103M	CAPACITOR,FIXED,CER .01 UF,PORM 20 PCT,100 VDCW	EA	6
152	3	PADZZ	5910-01-038-5395	81349	CMR05F391GODR	CAPACITOR,FIXED,MIC	EA	1
152	4	PADZZ	5910-00-061-7043	81349	CC22UJ100C	CAPACITOR,FIXED,CER	EA	1
152	5	PADZA		80063	SM-C-374822-1	CONNECTOR,RECEPTACL 50 OHMS NOMINAL IMPEDANCE	EA	1
152	6	PADZZ	5961-00-911-6015	81349	JAN2N3251A	TRANSISTOR	EA	2
152	7	PADZZ	5905-00-106-3666	81349	RCR07G103JS	RESISTOR,FIXED,COMP	EA	1
152	8	PADZZ	5905-00-114-5343	81349	RCR07G182JS	RESISTOR,FIXED,COMP	EA	3
152	9	PADZZ	5905-00-104-8358	81349	RCR07G822JS	RESISTOR,FIXED,COMP	EA	2
152	10	PADZZ	5905-00-141-0744	81349	RCR07G562JS	RESISTOR,FIXED,COMP	EA	1
152	11	PADZZ	5905-00-110-7620	81349	RCR07G102JS	RESISTOR,FIXED,COMP	EA	1
152	12	PADZZ	5905-00-119-8768	81349	RCR07G821JS	RESISTOR,FIXED,COMP	EA	1
152	13	PADZZ	5950-01-011-5529	80063	SM-D-414212	TRANSFORMER,RADIO F	EA	1
152	14	PADZZ		80063	SM-D-414210	TRANSFORMER,RADIO F	EA	1
152	15	PADZZ	5950-01-011-3193	80063	SM-D-414208	TRANSFORMER,RADIO F	EA	1
152	16	PADZZ	5970-00-989-8333	07047	A-10042	INSULATOR,DISK	EA	2
152	17	XDDDA		80063	SM-C-414205	CIRCUIT BOARD ASSY	EA	1
152	18	XDDZZ		80063	SM-D-414207	PRINTED CIRCUIT BD	EA	1
152	19	XDDZZ		80063	SM-C-413575-1	TERMINAL,STUD	EA	1
152	20	XDDZZ		70528	4535-060	EYELET,MTLC	EA	2
152	21	XDDZA		80063	SM-C-413574	CONTACT,ELEC	EA	2

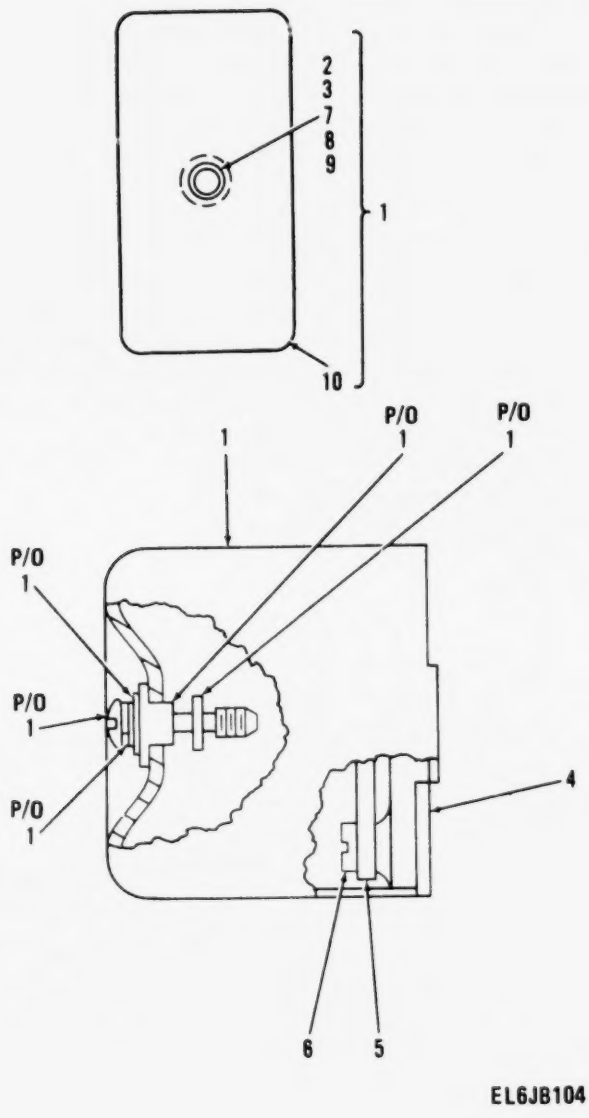

Figure 153. Generator Ref Signal, Hunt Generator.

(1) ILLUSTRATION (a) FIG NO	(b) ITEM NO	(2) SMR CODE	(3) NATIONAL STOCK NUMBER	(4) FSCM	(5) PART NUMBER	(6) DESCRIPTION / USABLE ON CODE	(7) U/M	(8) QTY INC IN UNIT
						GROUP 010504 GENERATOR REF SIGNAL (HUNT GENERATOR) A8400 AND A8400A SM-B-374963		
153	1	XDODL		80063	SM-B-414257	COVER ASSY	EA	1
153	2	XDDZZ		80063	SM-D-414256	BASE	EA	1
153	3	XDDDD		80063	SM-D-374978	FREQUENCY CONT ASSY	EA	1
153	4	PADZZ	5305-00-855-0962	96906	MS24629-3	SCREW,TAPPING,THREA	EA	2
153	5	PADZZ		80063	SM-C-413531-1	SCREW,EXT REL	EA	1
153	6	PADZZ	5310-00-543-5060	96906	MS35338-39	WASHER,LOCK	EA	1
153	7	PADZZ	5310-00-087-0057	96906	MS15795-2	WASHER,FLAT	EA	1
153	8	XDDZZ		80063	SM-B-414260	BUSHING,SLEEVE	EA	1
153	9	PADZZ		79136	5555G-7	RING,RETAINING	EA	1
153	10	XDDZZ		80063	SM-C-414259	COVER	EA	1

LEGEND

REF DES	ITEM NO	REF DES	ITEM NO	REF DES	ITEM NO	REF DES	ITEM NO
C8401	1	C8408	7	R8401	12	R8407	18
C8402	2	C8409	8	R8402	13	R8408	15
C8403	1	L8401	9	R8403	14	R8409	19
C8404	3	Q8401	10	R8404	15	R8410	20
C8405	4	Q8402	11	R8405	16	R8411	21
C8406	5	Q8403	10	R8406	17	T8401	22
C8407	6						

EL6JB105

Figure 154. Frequency Control Assembly (Sheet 1 of 3).

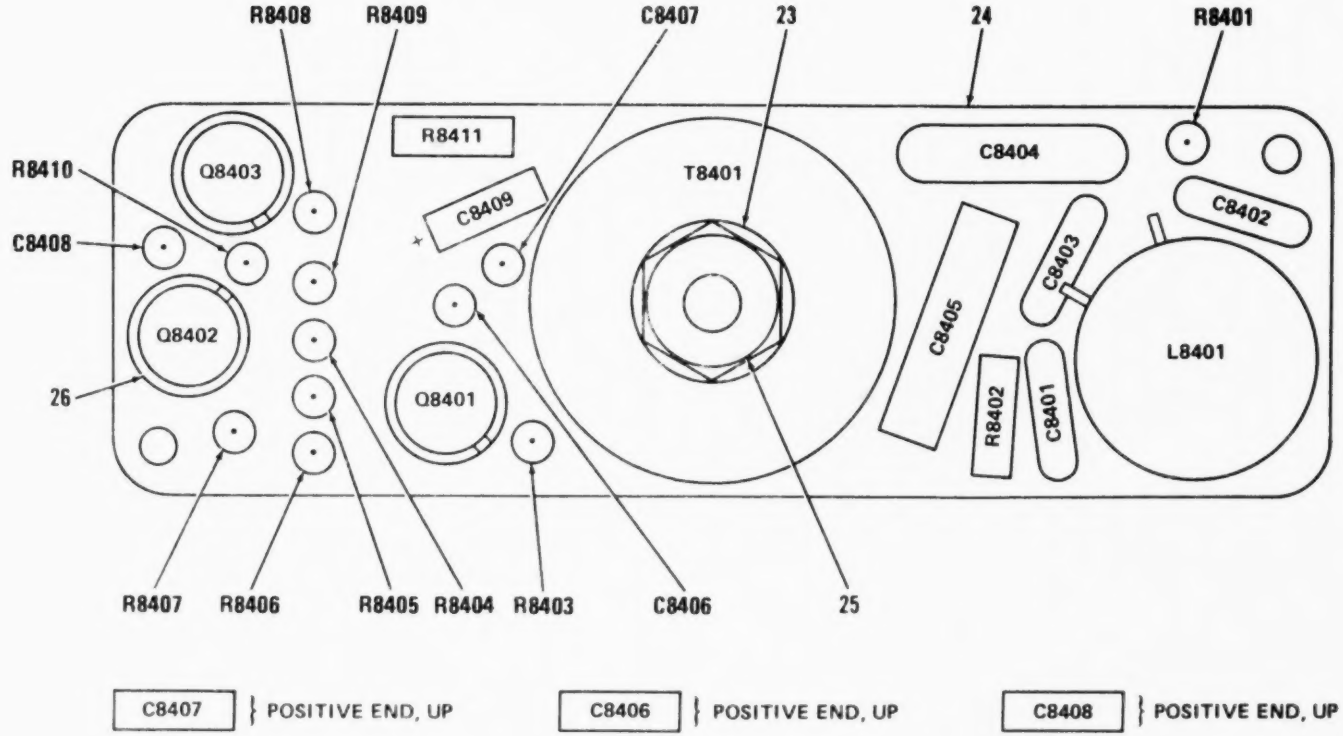

Figure 154. Frequency Control Assembly (Sheet 2 of 3).

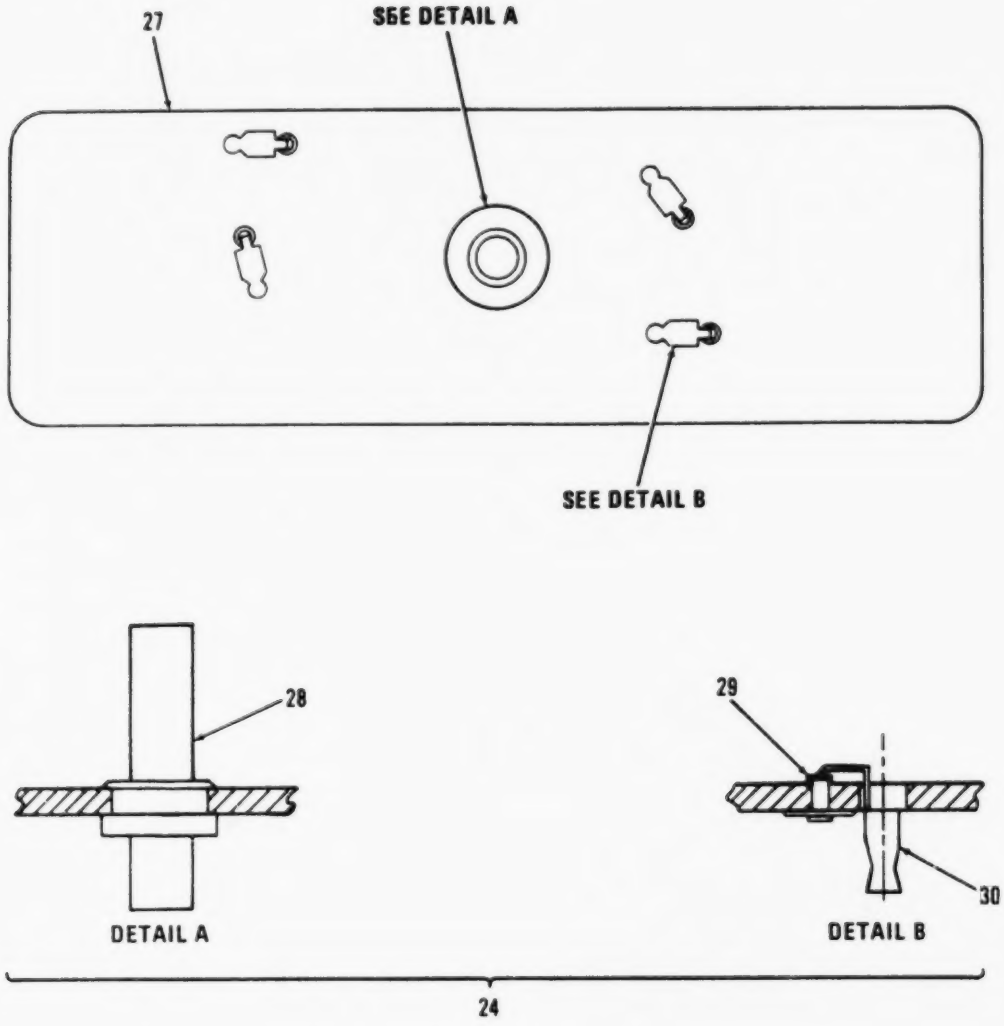

Figure 154. Frequency Control Assembly (Sheet 3 of 3).

(1) ILLUSTRATION (a) FIG NO	(1) ILLUSTRATION (b) ITEM NO	(2) SMR CODE	(3) NATIONAL STOCK NUMBER	(4) FSCM	(5) PART NUMBER	(6) DESCRIPTION USABLE ON CODE	(7) U/M	(8) QTY INC IN UNIT
						GROUP 01050401 FREQUENCY CONTROL ASSY		
154	1	PADZZ	5910-01-053-6833	81349	CMR05C100D0DR	CAPACITOR,FIXED,MIC	EA	2
154	2	PADZZ	5910-01-030-1771	81349	CMR05E200J0DR	CAPACITOR,FIXED,MIC	EA	1
154	3	PADZZ	5910-01-040-1232	81349	CMR06F302G0DR	CAPACITOR,FIXED,MIC	EA	1
154	4	PADZZ	5910-00-947-5702	99515	HE1-104E	CAPACITOR,FIXED,PLA 0.1 UF,PORM 20 PCT,50 VDCW	EA	1
154	5	PADZZ	5910-00-113-5475	81349	M39003/01-3006	CAPACITOR,FIXED,ELE	EA	1
154	6	PADZZ	5910-00-495-0042	81349	M39003/01-3076	CAPACITOR,FIXED,ELE	EA	1
154	7	PADZZ	5910-00-254-8169	81349	M39003/01-3073	CAPACITOR,FIXED,ELE	EA	1
154	8	PADZZ	5910-00-455-4304	81349	M39003/01-3067	CAPACITOR,FIXED,ELE	EA	1
154	9	XDDZZ		80063	SM-C-414266	REACTOR ASSY 191 UH,PORM 9 UH EACH COIL,50 VDCW	EA	1
154	10	PADZZ	5961-00-951-8757	81349	JAN2N2222A	TRANSISTOR	EA	2
154	11	PADZZ		80063	SM-A-921475	TRANSISTOR	EA	1
154	12	PADZZ	5905-00-105-7764	81349	RCR07G222JS	RESISTOR,FIXED,COMP	EA	1
154	13	PADZZ	5905-00-115-3562	81349	RCR07G394JS	RESISTOR,FIXED,COMP	EA	1
154	14	PADZZ	5905-00-114-0711	81349	RCR07G472JS	RESISTOR,FIXED,COMP	EA	1
154	15	PADZZ	5905-00-141-0717	81349	RCR07G473JS	RESISTOR,FIXED,COMP	EA	2
154	16	PADZZ	5905-00-104-8358	81349	RCR07G822JS	RESISTOR,FIXED,COMP	EA	1
154	17	PADZZ	5905-00-136-8405	81349	RCR07G131JS	RESISTOR,FIXED,COMP	EA	1
154	18	PADZZ	5905-00-106-1356	81349	RCR07G152JS	RESISTOR,FIXED,COMP	EA	1
154	19	PADZZ	5905-00-228-5506	81349	RCR07G622JS	RESISTOR,FIXED,COMP	EA	1
154	20	PADZZ	5905-00-119-8768	81349	RCR07G821JS	RESISTOR,FIXED,COMP	EA	1
154	21	PADZZ	5905-00-105-7765	81349	RCR07G224JS	RESISTOR,FIXED,COMP	EA	1
154	22	PADZZ		80045	816065	TRANSFORMER,AUDIO F 25 VDCW,DC RES 35 OHMS PRIMARY 80 OHMS SECONDARY	EA	1
154	23	PADZZ	5310-00-167-0833	88044	AN960-3L	WASHER,FLAT	EA	1
154	24	XDDDA		80063	SM-D-374976	CIRCUIT BOARD ASSY	EA	1
154	25	PADZZ	5310-00-660-2971	96906	MS25082-2	NUT,PLAIN,HEXAGON	EA	3
154	26	PADZZ		07047	A-10044DAP BLK	INSULATOR DISK	EA	3
154	27	XDDZZ		80063	SM-D-374975	PRINTED CIRCUIT BD	EA	1
154	28	XDDZZ		80063	SM-C-414265	POST	EA	1
154	29	XDDZZ		70528	4535-060	EYELET,MTLC	EA	4
154	30	XDDZA		80063	SM-C-413574	CONTACT,ELEC	EA	4

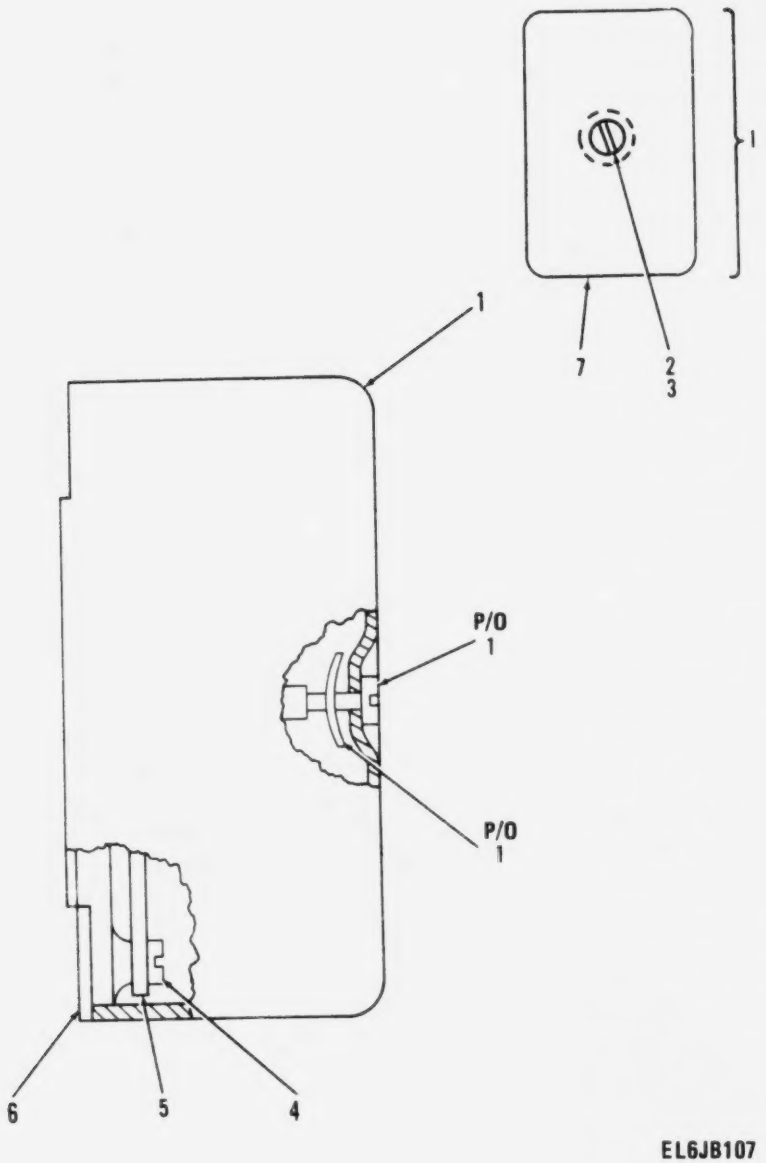

Figure 155. Transmitter Speech Amplifier Assembly.

(1) ILLUSTRATION (a) FIG NO	(1) ILLUSTRATION (b) ITEM NO	(2) SMR CODE	(3) NATIONAL STOCK NUMBER	(4) FSCM	(5) PART NUMBER	(6) DESCRIPTION / USABLE ON CODE	(7) U/M	(8) QTY INC IN UNIT
						GROUP 010505 TRANSMITTER SPEECH AMPLIFIER ASSY A8500A SM-C-921485		
155	1	XBFFF		80063	SM-B-414241	COVER ASSY	EA	1
155	2	PADZZ	5305-00-855-0962	96906	MS24629-3	SCREW,TAPPING,THREA	EA	4
155	3	XDDDD		80063	SM-D-921486	AMPLIFIER ASSY,RF	EA	1
155	4	XDDZZ		80063	SM-D-414240	BASE	EA	1
155	5	PAFZZ	5305-00-988-5747	83486	43-04-04120CD PL	SCREW,ASSEMBLED WAS	EA	1
155	6	PAFZZ		78553	C-1869555-012	FASTENER,SH SPR	EA	1
155	7	XBFZZ		80063	SM-C-414243	COVER	EA	1

LEGEND

REF DES	ITEM NO	REF DES	ITEM NO	REF DES	ITEM NO	REF DES	ITEM NO
CR8501	1	C8508	7	R8503	15	R8514	24
CR8502	1	C8509	8	R8504	16	R8515	25
CR8503	1	C8510	8	R8505	15	R8516	25
CR8504	1	C8511	3	R8506	17	R8517	26
CR8505	2	C8512	9	R8507	18	R8518	18
C8501	3	C8513	10	R8508	15	R8519	27
C8502	4	Q8501	11	R8509	19	R8520	28
C8503	5	Q8502	11	R8510	20	R8521	16
C8504	3	Q8503	12	R8511	21	R8522	29
C8505	5	Q8504	11	R8512	22	R8523	30
C8506	3	R8501	13	R8513	23	T8501	31
C8507	6	R8502	14				

PREFIX ALL REFERENCE DESIGNATIONS WITH A8000AA8500A

EL6JB108

Figure 156. Amplifier Assembly, Audio Frequency (Sheet 1 of 3).

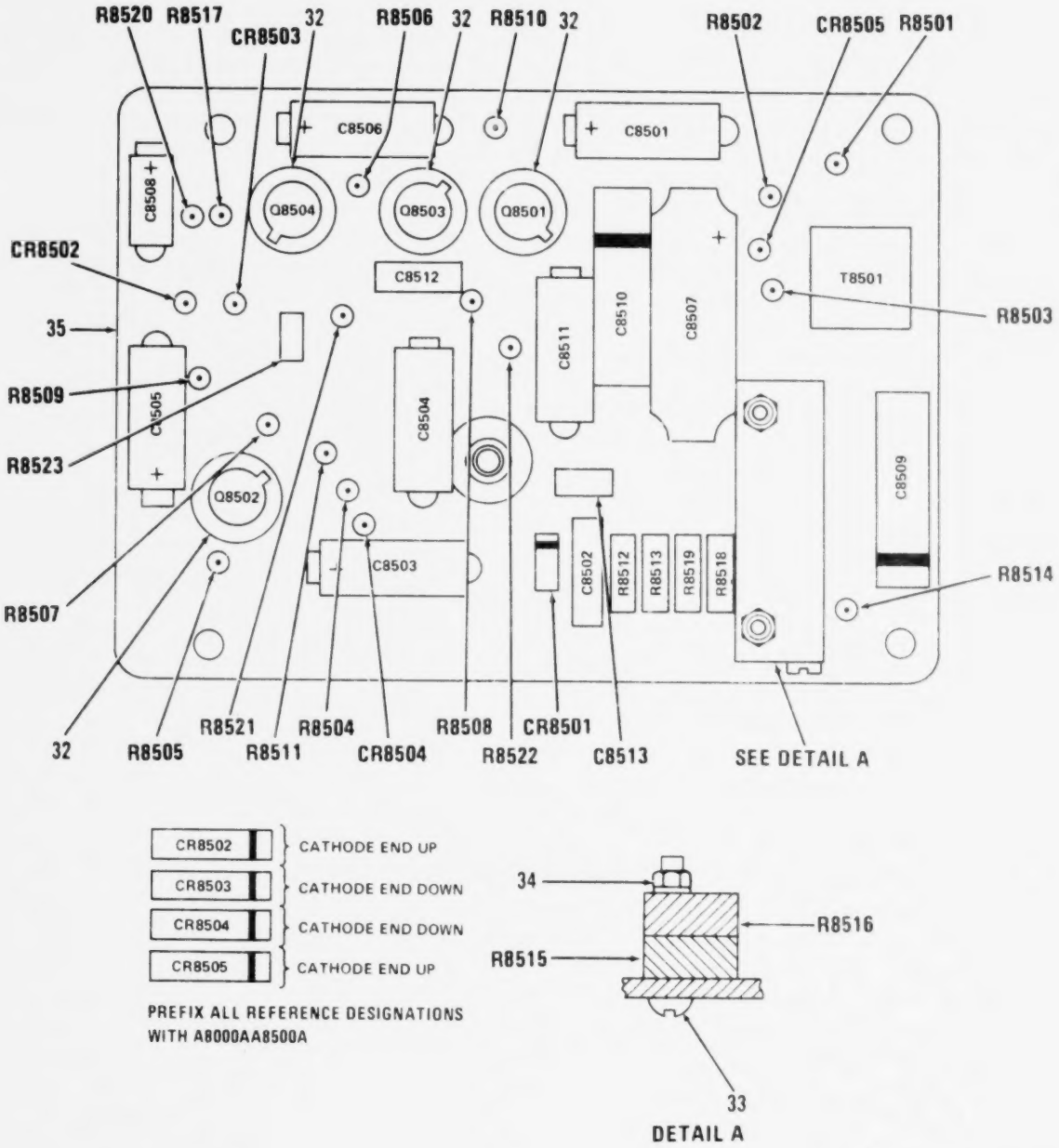

Figure 156. Amplifier Assembly, Audio Frequency (Sheet 2 of 3).

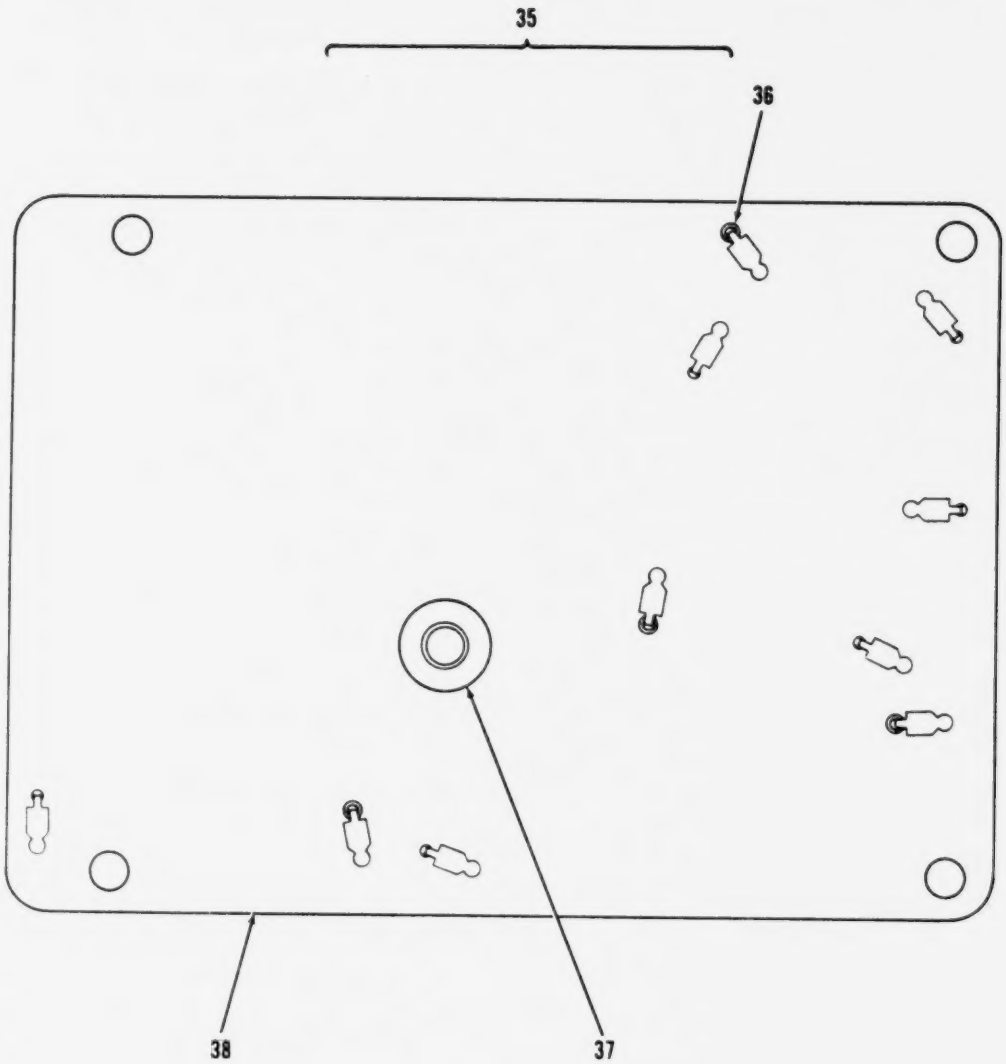

Figure 156. Amplifier Assembly, Audio Frequency (Sheet 3 of 3).

(1) ILLUSTRATION (a) FIG NO	(1) ILLUSTRATION (b) ITEM NO	(2) SMR CODE	(3) NATIONAL STOCK NUMBER	(4) FSCM	(5) PART NUMBER	(6) DESCRIPTION / USABLE ON CODE	(7) U/M	(8) QTY INC IN UNIT
						GROUP 01050501 AMPLIFIER ASSY,AUDIO FREQ		
156	1	PADZZ	5961-00-938-1135	81349	JAN1N4148	SEMICOND DVC,DIODE	EA	4
156	2	PADZZ	5961-00-846-9157	81349	JAN1N759A	SEMICONDUCTOR DEVIC	EA	1
156	3	PADZZ	5910-00-113-5475	81349	M39003/01-3006	CAPACITOR,FIXED,ELE	EA	4
156	4	PADZZ	5910-00-890-0554	80063	SM-C-413567-3	CAPACITOR,FIXED,CER .0047 UF,PORM 20 PCT,100 VDCW	EA	1
156	5	PADZZ	5910-00-113-5475	81349	M39003/01-3006	CAPACITOR,FIXED,ELE	EA	4
156	6	PADZZ	5910-00-113-5689	81349	M39003/01-3015	CAPACITOR,FIXED,ELE	EA	1
156	7	PADZZ	5910-00-495-0042	81349	M39003/01-3076	CAPACITOR,FIXED,ELE	EA	1
156	8	PADZZ	5910-00-012-5545	99515	EP-60-1	CAPACITOR,FIXED,PLA 0.05 UF,PORM 10 PCT 50 VDCW	EA	2
156	9	PADZZ	5910-00-983-6866	81349	CK61BX471K	CAPACITOR,FIXED,CER	EA	1
156	10	PADZZ	5910-00-113-5277	81349	M39014/01-1563	CAPACITOR,FIXED,CER	EA	1
156	11	PADZZ	5961-00-951-8757	81349	JAN2N2222A	TRANSISTOR	EA	3
156	12	PADZZ	5961-00-925-3777	81349	JAN2N2907A	TRANSISTOR	EA	1
156	13	PADZZ	5905-00-141-0742	81349	RCR07G181JS	RESISTOR,FIXED,COMP	EA	1
156	14	PADZZ	5905-00-115-3560	81349	RCR07G183JS	RESISTOR,FIXED,COMP	EA	1
156	15	PADZZ	5905-00-126-6883	81349	RCR07G332JS	RESISTOR,FIXED,COMP	EA	3
156	16	PADZZ	5905-00-105-7768	81349	RCR07G561JS	RESISTOR,FIXED,COMP	EA	2
156	17	PADZZ	5905-00-110-7622	81349	RCR07G682JS	RESISTOR,FIXED,COMP	EA	1
156	18	PADZZ	5905-00-106-3666	81349	RCR07G103JS	RESISTOR,FIXED,COMP	EA	2
156	19	PADZZ	5905-00-116-8556	81349	RCR07G223JS	RESISTOR,FIXED,COMP	EA	1
156	20	PADZZ	5905-00-110-7620	81349	RCR07G102JS	RESISTOR,FIXED,COMP	EA	1
156	21	PADZZ	5905-00-141-0744	81349	RCR07G562JS	RESISTOR,FIXED,COMP	EA	1
156	22	PADZZ	5905-00-136-3891	81349	RCR07G621JS	RESISTOR,FIXED,COMP	EA	1
156	23	PADZZ	5905-00-115-2261	81349	RCR07G912JS	RESISTOR,FIXED,COMP	EA	1
156	24	PADZZ	5905-00-116-8555	81349	RCR07G153JS	RESISTOR,FIXED,COMP	EA	1
156	25	PADZZ	5905-00-068-8265	81349	RT10C2L103	RESISTOR,VARIABLE,W 10100 OHMS MAX RESISTANCE	EA	2
156	26	PADZZ	5905-00-119-8812	81349	RCR07G121JS	RESISTOR,FIXED,COMP	EA	1
156	27	PADZZ	5905-00-119-8768	81349	RCR07G821JS	RESISTOR,FIXED,COMP	EA	1
156	28	PADZZ	5905-00-119-8768	81349	RCR07G821JS	RESISTOR,FIXED,COMP	EA	1
156	29	PADZZ	5905-00-135-3975	81349	RCR07G680JS	RESISTOR,FIXED,COMP	EA	1
156	30	PADZZ	5905-00-116-8555	81349	RCR07G153JS	RESISTOR,FIXED,COMP	EA	1
156	31	XDDZZ		50763	831161	TRANSFORMER,AF 0 MILLIA DC,500 TO 3000 HZ,50 VDCW, 0.1 MILLIW POWER LEVEL	EA	1
156	32	PADZZ		07047	A-10044DAP BLK	INSULATOR,DISK	EA	4
156	33	PADZZ	5305-00-958-6381	96906	MS35206-208	SCREW,MACHINE	EA	2
156	34	PADZZ	5310-01-100-6991	30655	F92-1660-26	NUT,SELF-LOCKING,HE	EA	2
156	35	XDDDA		80063	SM-D-921488	CIRCUIT BOARD ASSY	EA	1
156	36	XDDZZ		80063	SM-C-413574	CONTACT,ELEC	EA	10
156	37	XDDZZ		80063	SM-C-413575-1	TERMINAL,STUD	EA	1

(1) ILLUSTRATION (a) FIG NO	(1) ILLUSTRATION (b) ITEM NO	(2) SMR CODE	(3) NATIONAL STOCK NUMBER	(4) FSCM	(5) PART NUMBER	(6) DESCRIPTION / USABLE ON CODE	(7) U/M	(8) QTY INC IN UNIT
156	38	XDDZZ		80063	SM-D-921487	PRINTED CIRCUIT BD.....	EA	1

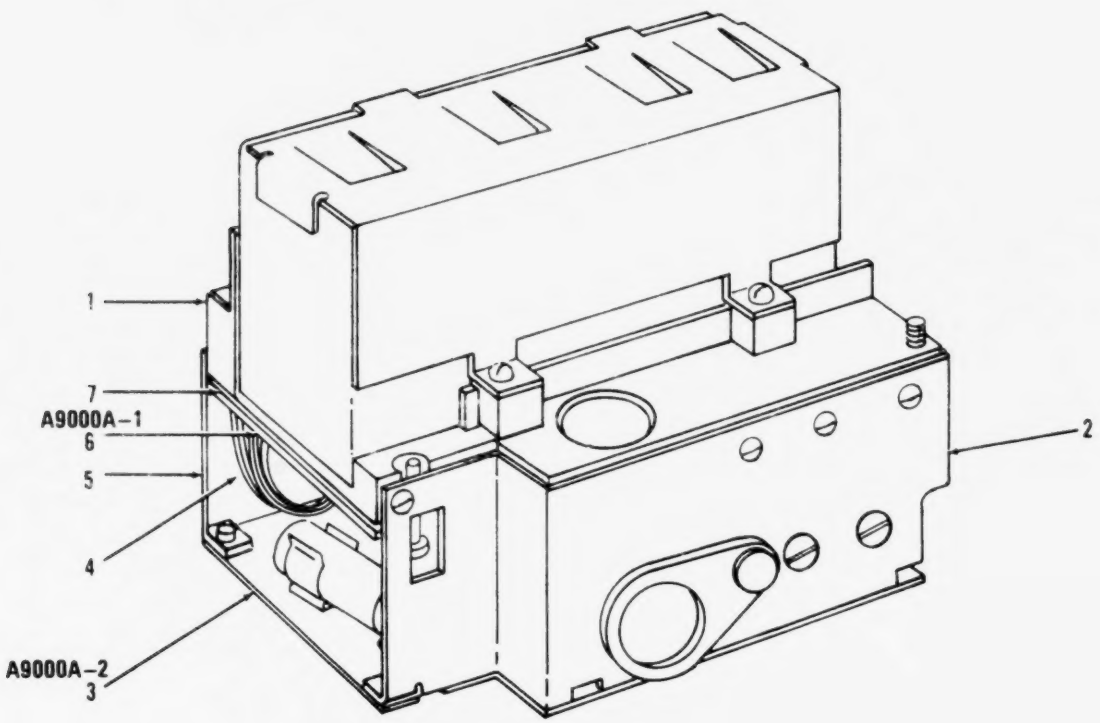

PREFIX ALL REFERENCE DESIGNATIONS WITH A9000A

EL6JB053

Figure 157. Power Supply Assembly (Sheet 1 of 3).

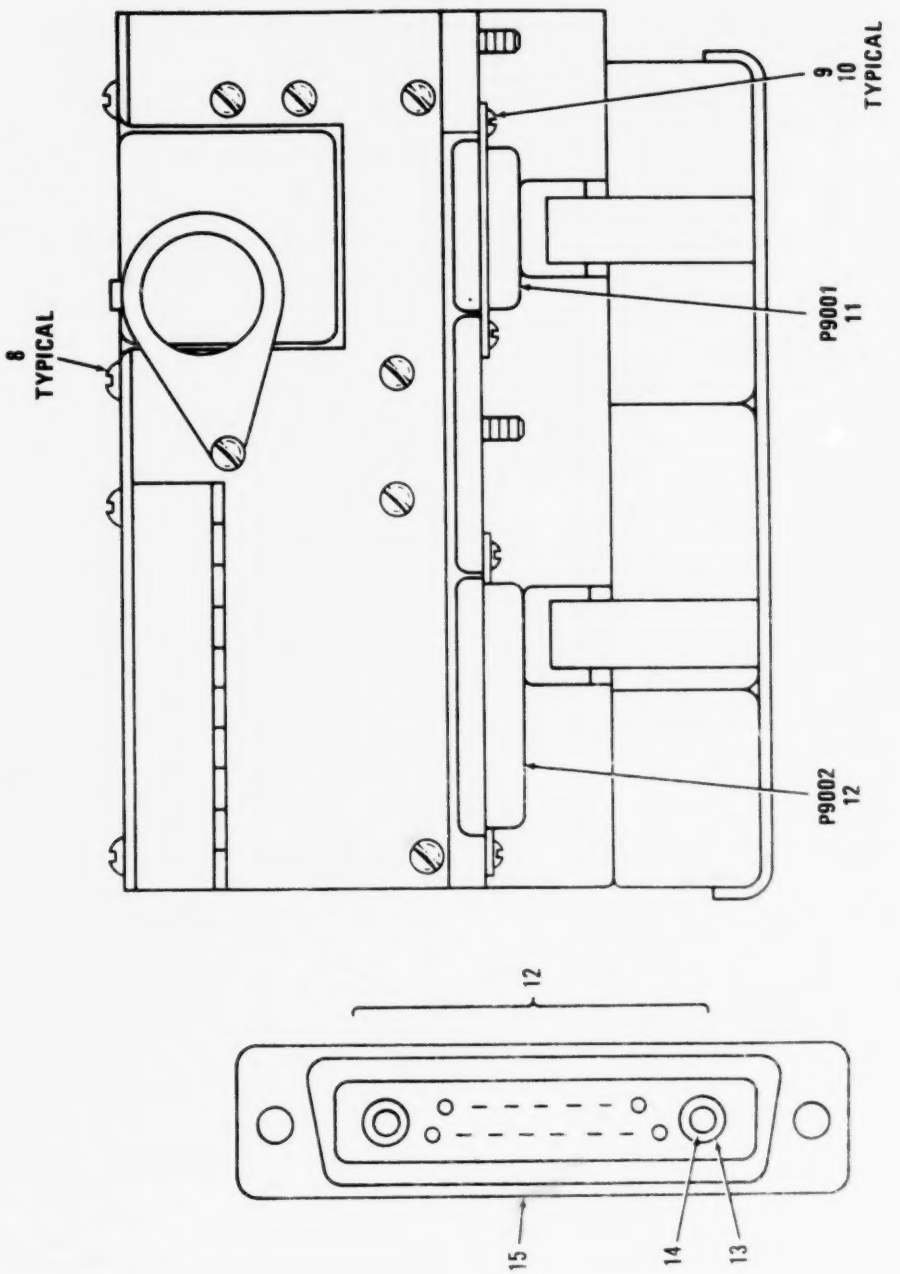

Figure 157. Power Supply Assembly (Sheet 2 of 3).

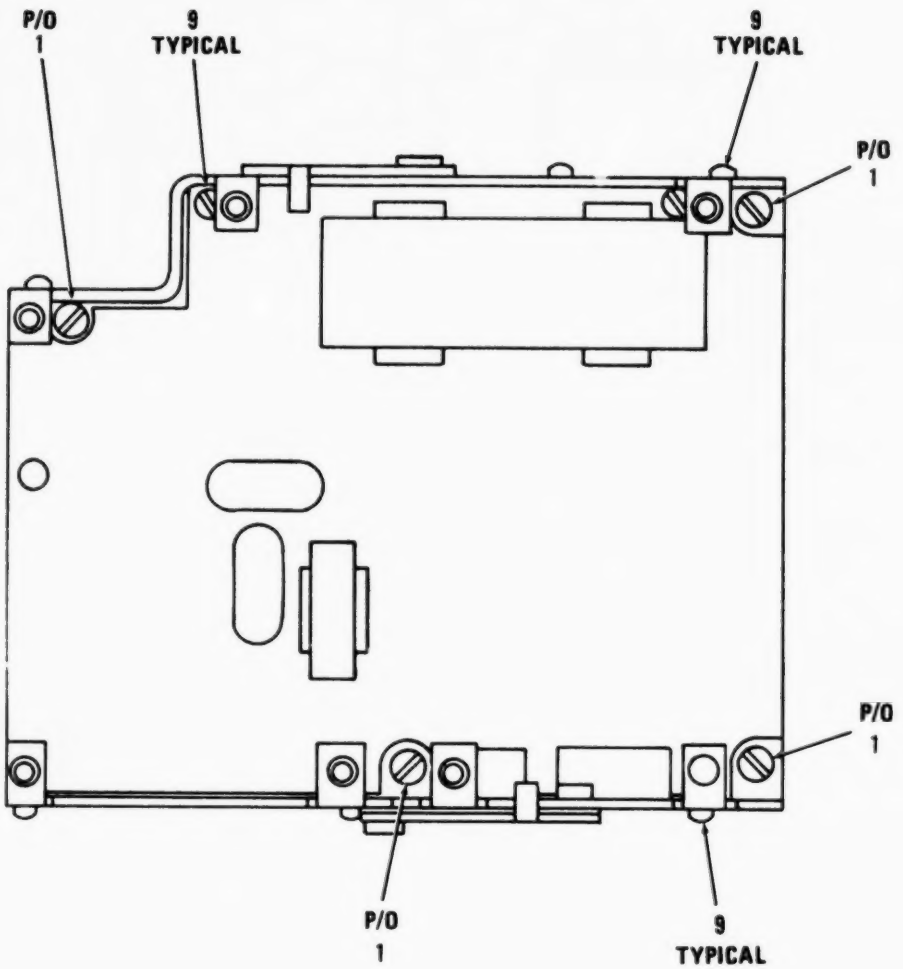

Figure 157. Power Supply Assembly (Sheet 3 of 3).

(1) ILLUSTRATION (a) FIG NO	(1) ILLUSTRATION (b) ITEM NO	(2) SMR CODE	(3) NATIONAL STOCK NUMBER	(4) FSCM	(5) PART NUMBER	(6) DESCRIPTION / USABLE ON CODE	(7) U/M	(8) QTY INC IN UNIT
						GROUP 0106 POWER SUPPLY ASSY		
						A9000A SM-D-921504		
157	1	XADDD		80063	SM-D-921514	CHASSIS ASSY	EA	1
157	2	PAHHH		80063	SM-B-921523	PANEL ASSY,REAR	EA	1
157	3	PAHDD		80063	SM-D-921544	CIRCUIT CD ASSY	EA	1
157	4	XBHHH		80063	SM-D-921511	WIRING ASSY	EA	1
157	5	PAHHH		80063	SM-D-921525	FRONT PNL RES ASSY	EA	1
157	6	PAFDD		80063	SM-D-921507	CIRCUIT CD ASSY	EA	1
157	7	XDHZZ		80063	SM-D-921518	INSULATOR	EA	1
157	8	PAHZZ	5305-00-889-3116	96906	MS35206-213	SCREW,MACHINE	EA	6
157	9	PAFZZ	5305-00-889-3116	96906	MS35206-213	SCREW,MACHINE	EA	1
157	10	PAHZZ	5310-00-543-2410	96906	MS35338-40	WASHER,LOCK	EA	2
157	11	PAHZZ		92702	DA-15P (C33)	CONNECTOR,RCPT 15 PIN TYPE CONTACTS	EA	1
157	12	AMHHA		80063	SM-C-414312	CONNECTOR ASSY 15 PIN TYPE CONTACTS,1 SOCKET TYPE HIGH VOLT CONTACT	EA	1
157	13	PAHZZ		71468	051380-0000	STABILIZER	EA	1
157	14	PAHZA		80063	SM-C-414120-1	CONTACT,ELECTRICAL	EA	1
157	15	PAHZA	5935-00-949-5647	42498	38531-3	CONNECTOR,RECEPTACL 15 PIN TYPE CONTACTS	EA	1

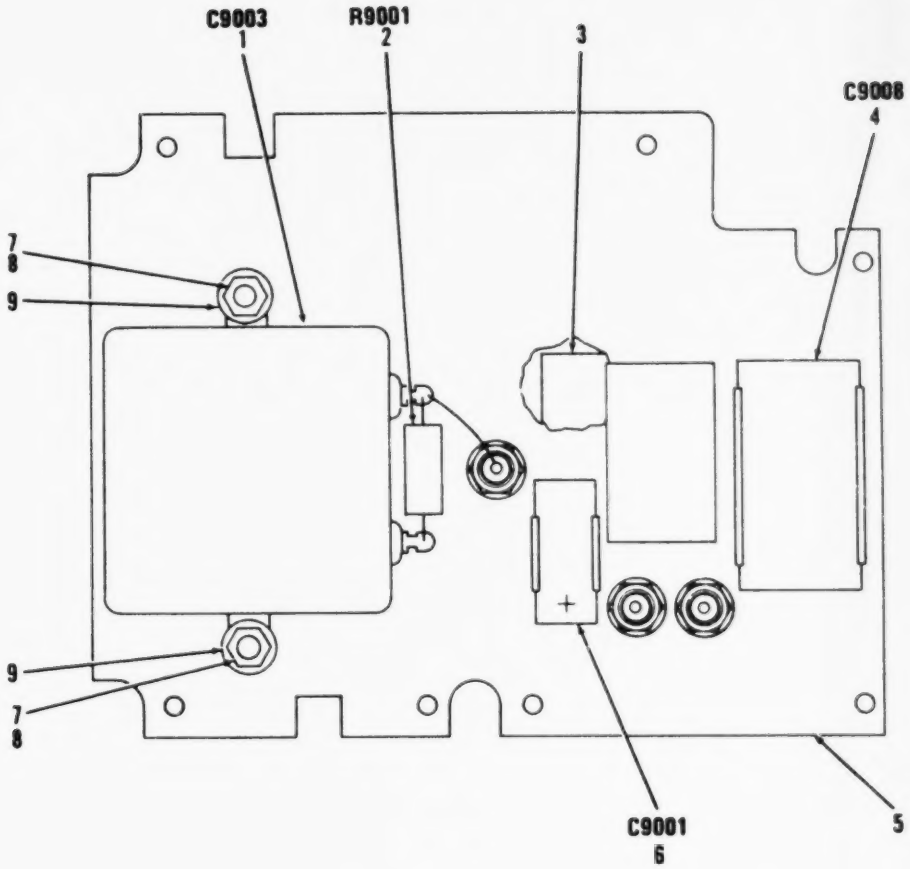

PREFIX ALL REFERENCE DESIGNATIONS WITH A9000AA9000A-2

EL6JB025

Figure 158. Power Supply, Electrical, Circuit Card Assembly (Sheet 1 of 2).

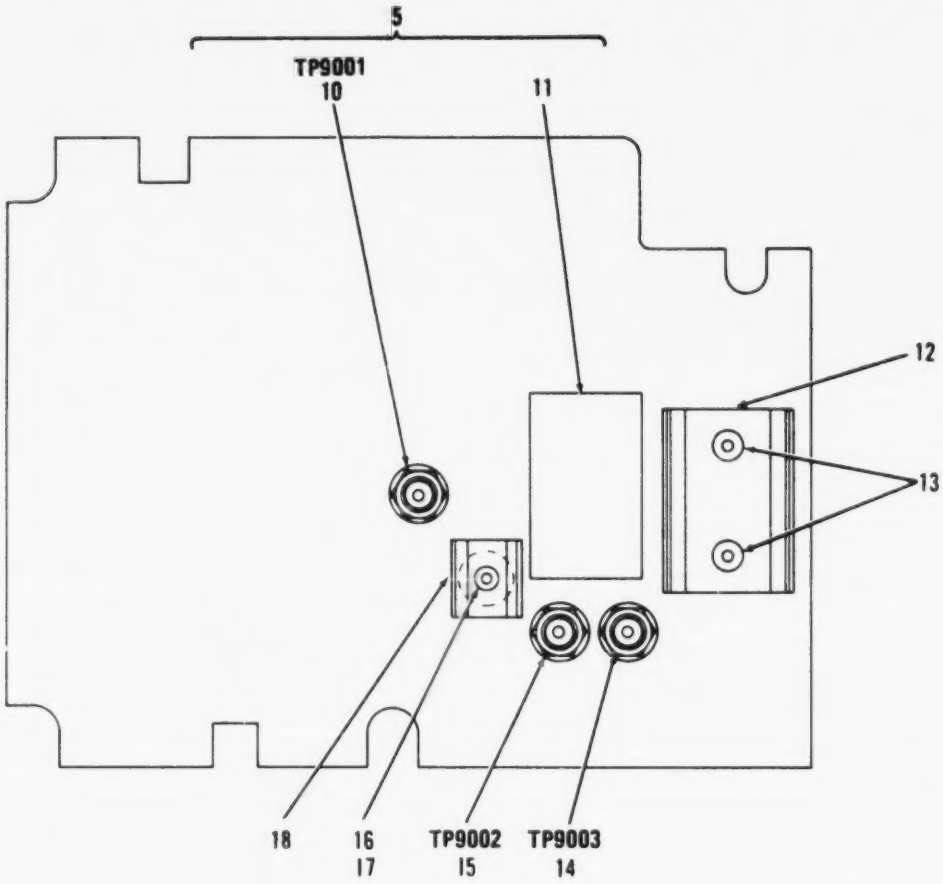

Figure 158. Power Supply, Electrical, Circuit Card Assembly (Sheet 2 of 2).

(1) ILLUSTRATION (a) FIG NO	(1) ILLUSTRATION (b) ITEM NO	(2) SMR CODE	(3) NATIONAL STOCK NUMBER	(4) FSCM	(5) PART NUMBER	(6) DESCRIPTION / USABLE ON CODE	(7) U/M	(8) QTY INC IN UNIT
						GROUP 010601 POWER SUPPLY,ELECTRICAL		
						(CIRCUIT BOARD ASSY)		
						A9000A-2 SN-0-921544		
158	1	PADZZ	5910-00-129-6259	81349	CP53B1EG105K1	CAPACITOR,FIXED,PAP	EA	1
158	2	PADZZ	5905-00-258-5572	81349	RCR42G564JS	RESISTOR,FIXED,COMP	EA	1
158	3	XBDZZ		80063	SM-C-921528	DECAL,DANGER	EA	1
158	4	PADZZ		81349	M39022/02-1196	CAPACITOR,PLSTC	EA	1
158	5	XDDDD		80063	SM-D-921541	CIRCUIT CD ASSY	EA	1
158	6	PADZZ	5910-01-073-9874	81349	M39006/09-8743	CAPACITOR,FIXED,ELE	EA	1
158	7	PAHZZ	5305-00-889-3116	96906	MS35206-213	SCREW,MACHINE	EA	2
158	8	PAHZZ	5310-00-582-9176	30655	F92-1660-40	NUT,SELF-LOCKING,HE	EA	2
158	9	PAHZZ	5310-00-595-6211	96906	MS15795-803	WASHER,FLAT	EA	2
158	10	PAHZZ	5935-00-702-4199	81349	M39024/10-02	JACK,TIP	EA	1
158	11	XBHZZ		80063	SM-B-414302-6	PAD	EA	1
158	12	PADZZ		91506	6018-5A	CLIP,SPRING TENSION	EA	1
158	13	PADZZ		08544	SE44SL PL	EYELET,MTLC	EA	2
158	14	PAHZZ	5935-00-764-2135	81349	M39024/10-04	JACK,TIP	EA	1
158	15	PAHZZ	5935-00-813-5874	81349	M39024/10-06	JACK,TIP	EA	1
158	16	PADZZ	5820-00-999-7295	80063	SM-B-414321	SPACER	EA	1
158	17	PADZZ		08544	SE37SL PL	EYELET,MTLC	EA	1
158	18	PADZZ		99378	100-225-6-5	CLIP	EA	1

LEGEND

REF DES	ITEM NO	REF DES	ITEM NO	REF DES	ITEM NO	REF DES	ITEM NO
CR9001	1	CR9010	3	C9005	6	R9007	13
CR9002	1	CR9011	1	C9006	7	R9008	14
CR9003	2	CR9012	1	C9007	8	R9009	15
CR9004	2	CR9013	1	K9001	9	R9010	15
CR9005	2	CR9014	1	K9002	9	R9011	16
CR9006	2	CR9015	1	R9002	10	R9012	16
CR9007	3	C9002	4	R9005	11	XK9001	17
CR9008	3	C9004	5	R9006	12	XK9002	17
CR9009	3						

PREFIX ALL REFERENCE DESIGNATIONS WITH A9000AA9000A-1

EL6JB109

Figure 159. Circuit Card Assembly, Cover Assembly (Sheet 1 of 3).

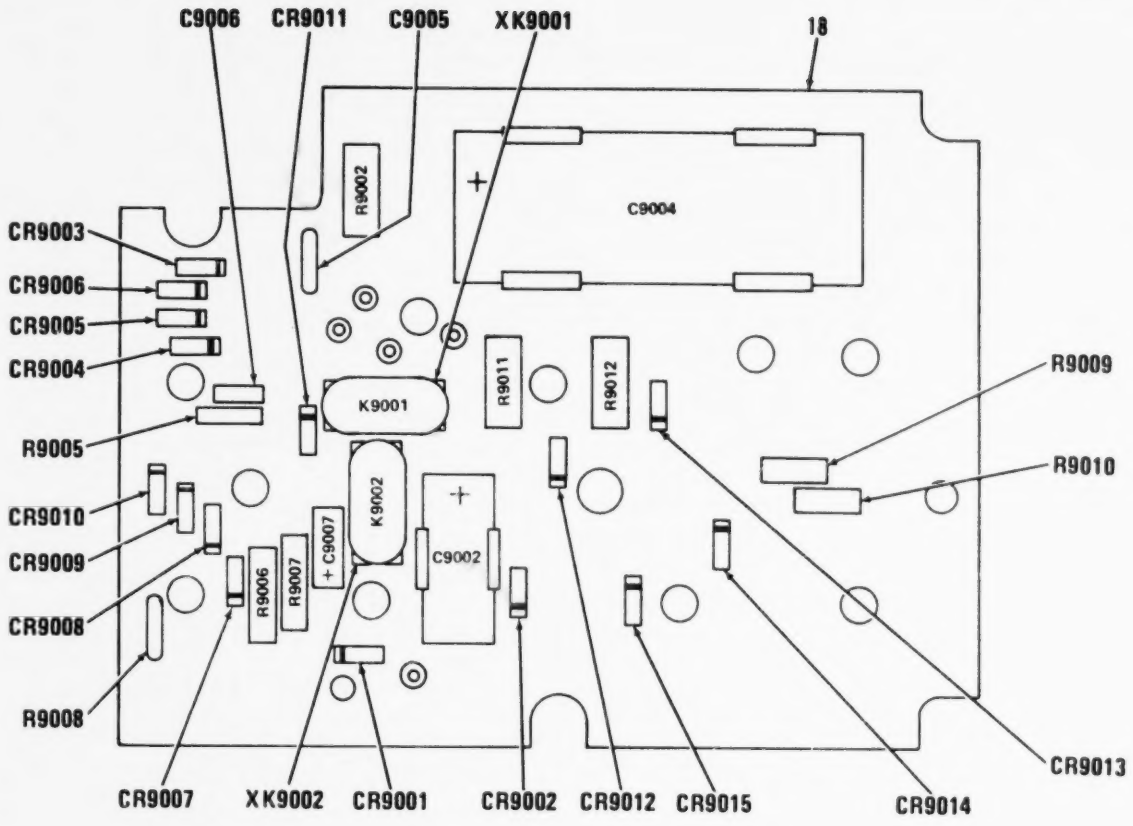

PREFIX ALL REFERENCE DESIGNATIONS WITH A9000AA9000A-1

EL6JB058

Figure 159. Circuit Card Assembly, Cover Assembly (Sheet 2 of 3).

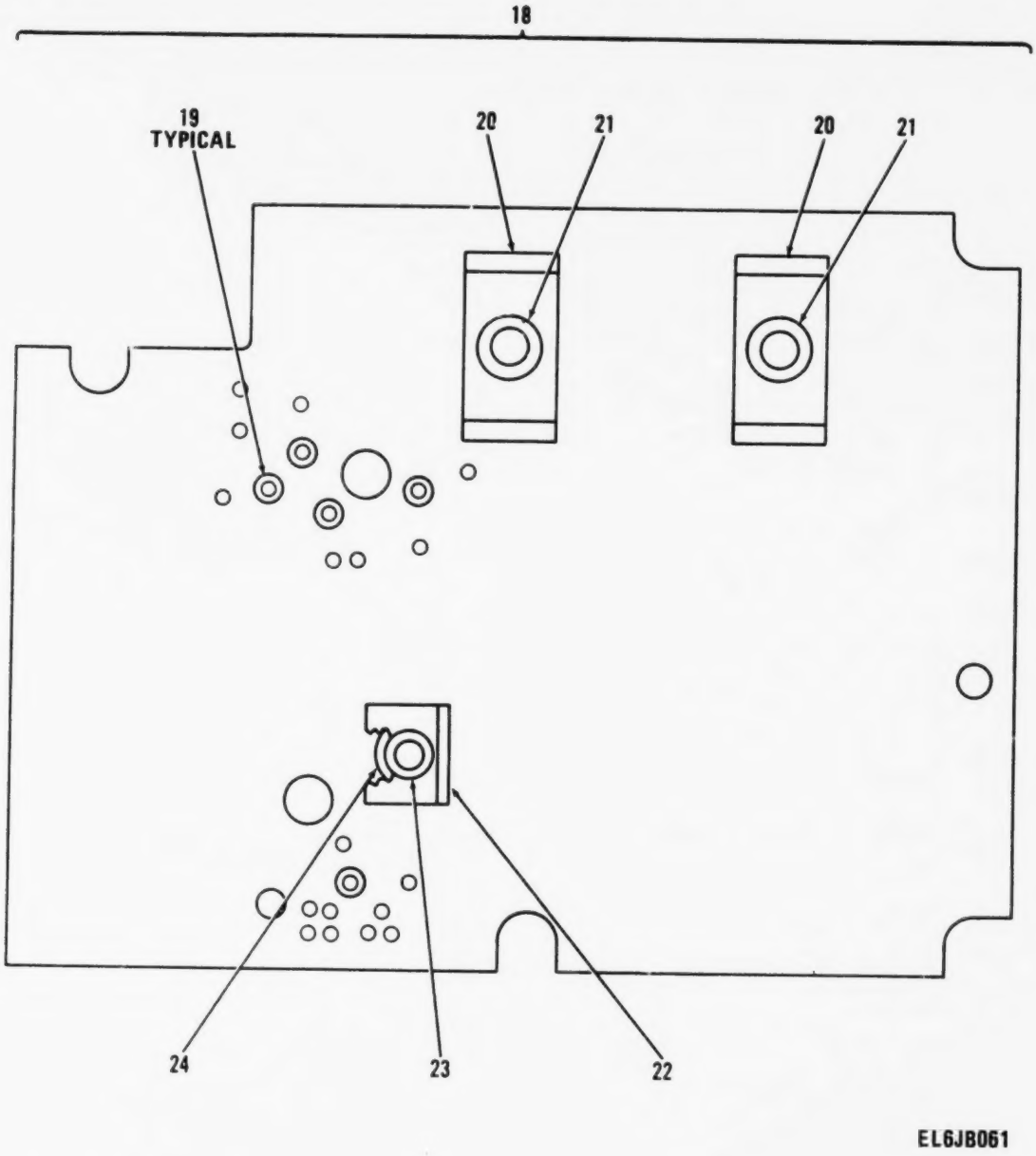

Figure 159. Circuit Card Assembly, Cover Assembly (Sheet 3 of 3).

(1) ILLUSTRATION (a) FIG NO	(1) ILLUSTRATION (b) ITEM NO	(2) SMR CODE	(3) NATIONAL STOCK NUMBER	(4) FSCM	(5) PART NUMBER	(6) DESCRIPTION / USABLE ON CODE	(7) U/M	(8) QTY INC IN UNIT
						GROUP 010602 CIRCUIT CARD ASSY (COVER ASSY) A9000-1 SM-D-414322 A9000A-1 SM-D-921507		
159	1	PADZZ	5961-00-565-5092	81349	JAN1N4942	SEMICONDUCTOR DEVIC	EA	7
159	2	PADZZ	5961-00-929-1600	81349	JAN1N4944	SEMICONDUCTOR DEVIC	EA	4
159	3	PADZZ	5961-00-114-5051	81349	JAN1N4948	SEMICONDUCTOR DEVIC	EA	4
159	4	PADZZ	5910-01-073-9874	81349	M39006/09-8743	CAPACITOR,FIXED,ELE	EA	1
159	5	PADZZ		81349	M39022/02-1214	CAPACITOR,FIXED,MET	EA	1
159	6	PADZZ	5910-01-038-5395	81349	CMR05F391G0DR	CAPACITOR,FIXED,MIC	EA	1
159	7	PADZZ	5910-00-010-8666	81349	M39014/01-1357	CAPACITOR,FIXED,CER	EA	1
159	8	PADZZ	5910-00-007-2004	07187	1782933-79	CAPACITOR,FIXED,ELE	EA	1
159	9	PAFZZ	5945-00-853-5945	82050	8R8-600A1-F1-26V	RELAY,ELECTROMAGNET DPDT FORM C,32 VDC MAX,600 OHMS PORM 10 PCT COIL RES	EA	2
159	10	PADZZ	5905-00-104-8351	81349	RCR32G154JS	RESISTOR	EA	1
159	11	PADZZ	5905-00-408-5254	81349	RWR80S49R9FR	RESISTOR,FIXED,WIRE	EA	1
159	12	PADZZ	5905-00-199-7492	81349	RWR89S383DFR	RESISTOR,FIXED,WIRE	EA	1
159	13	PADZZ	5905-00-481-7883	81349	RWR89S274DFR	RESISTOR,FIXED,WIRE	EA	1
159	14	PADZZ	5905-00-885-2172	81349	RWR80S10R0FR	RESISTOR,FIXED,WIRE	EA	1
159	15	PADZZ	5905-00-106-9344	81349	RCR20G101JS	RESISTOR,FIXED,COMP	EA	2
159	16	PADZZ	5905-01-009-5503	81349	RWR89S6R81FR	RESISTOR,FIXED,WIRE	EA	2
159	17	PADZZ	5935-00-901-4717	05574	000300-0316	SOCKET,PLUG-IN ELEC 8 SOCKET TYPE CONTACTS	EA	2
159	18	XDDDD		80063	SM-D-921505	CIRCUIT CD ASSY	EA	1
159	19	XDDZZ		08544	SE43SL PL	EYELET,MTLC	EA	5
159	20	XDDZZ		91506	6020-45A	HOLDER	EA	2
159	21	XDDZZ		08544	SE86SL PL	EYELET,MTLC	EA	2
159	22	PADZZ		99378	100-225-6-5	CLIP	EA	1
159	23	PADZZ		08544	SE37SL PL	EYELET,MTLC	EA	1
159	24	PADZZ	5820-00-999-7295	80063	SM-B-414321	SPACER	EA	1

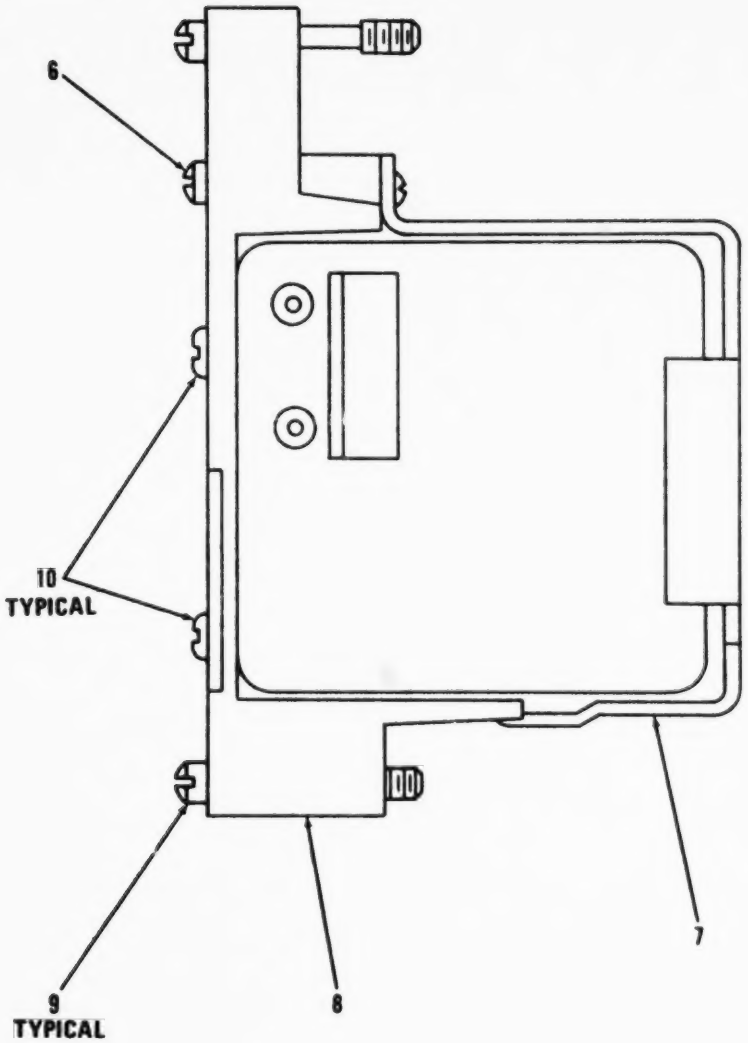

Figure 160. Chassis Assembly (Sheet 1 of 2).

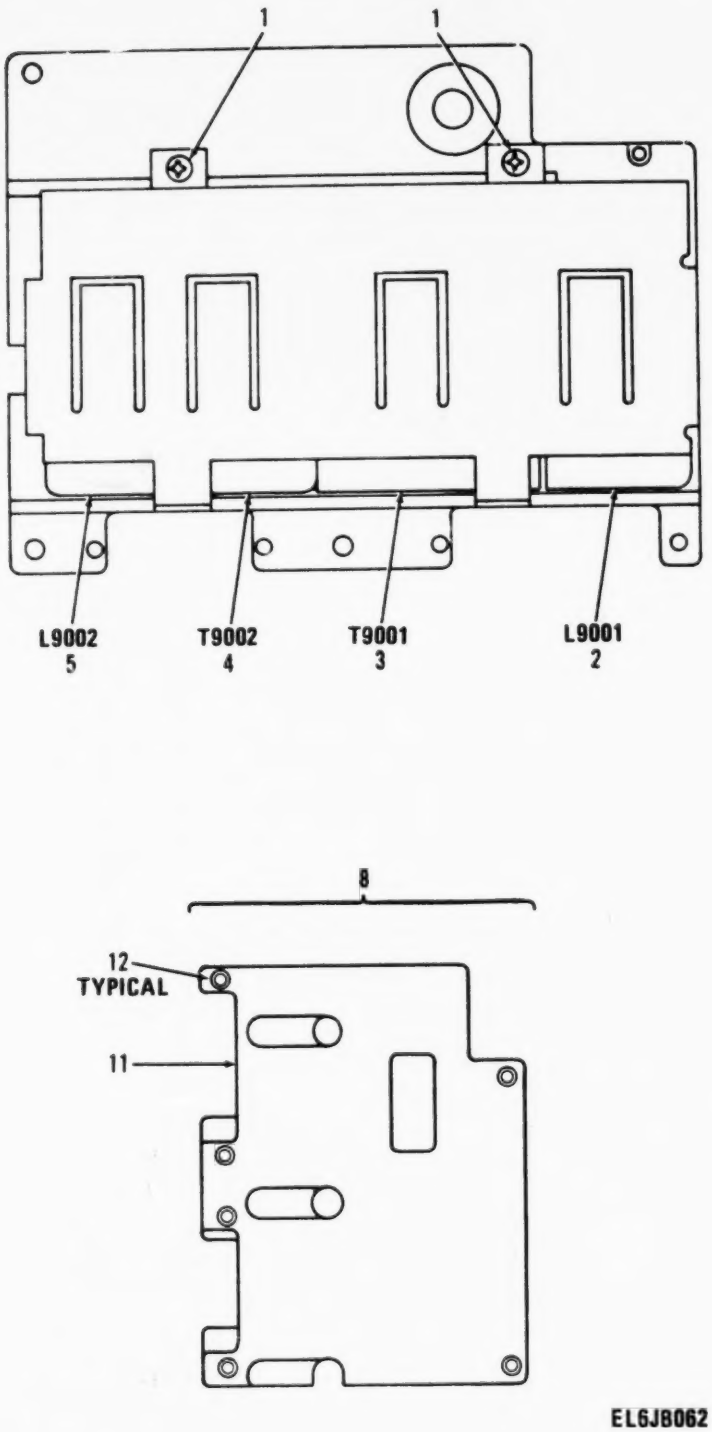

Figure 160. Chassis Assembly (Sheet 2 of 2).

(1) ILLUSTRATION (a) FIG NO.	(1) ILLUSTRATION (b) ITEM NO.	(2) SMR CODE	(3) NATIONAL STOCK NUMBER	(4) FSCM	(5) PART NUMBER	(6) DESCRIPTION / USABLE ON CODE	(7) U/M	(8) QTY INC IN UNIT
						GROUP 010603 CHASSIS ASSEMBLY		
						A9000A SM-D-921514		
160	1	PAHZZ	5305-00-958-6382	96906	MS35206-206	SCREW,MACHINE	EA	2
160	2	PAHZZ		97315	8C4521	REACTOR 1.1 MILLIH MIN INDUCTANCE AT 1 KHZ,5 VAC,2.5 AMP DC, 2000 HZ	EA	1
160	3	PAHZZ		26667	6739	TRANSFORMER	EA	1
160	4	PAHZZ		26667	6826	TRANSFORMER	EA	1
160	5	PAHZZ		26667	6876	REACTOR 150 MILLIH PORM 8 MILLIH INDUCTANCE AT 1 KHZ,10VRMS, 16.6 OHMS	EA	1
160	6	PAHZZ	5305-00-139-7009	80063	SM-C-413884-4	SCREW,EXTERNALLY	EA	1
160	7	XDDZZ		80063	SM-D-414337	SUPPORT	EA	1
160	8	XDDDD		80063	SM-D-414341	CHASSIS ASSY	EA	1
160	9	PAFZZ	5305-00-139-7007	80063	SM-C-413884-6	SCREW,EXTERNALLY	EA	3
160	10	PAHZZ	5305-01-133-3862	02615	M37A5440-5CR	SCREW,SLFLKG	EA	2
160	11	XDDZZ		80063	SM-D-414343	CHASSIS	EA	1
160	12	PADZZ	5340-00-853-6424	73957	N11240-18	INSERT,SCREW THREAD	EA	15

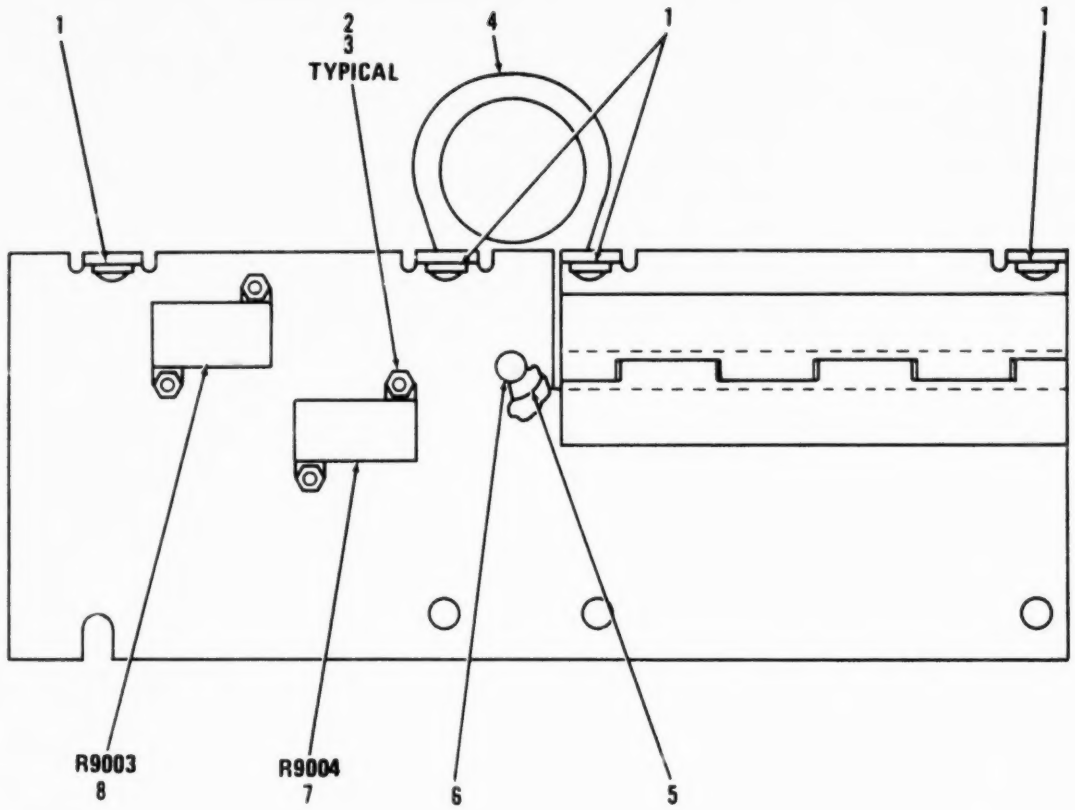

PREFIX ALL REFERENCE DESIGNATIONS WITH A9000A

EL6JB022

Figure 161. Resistor Assembly.

(1) ILLUSTRATION (a) FIG NO	(1) ILLUSTRATION (b) ITEM NO	(2) SMR CODE	(3) NATIONAL STOCK NUMBER	(4) FSCM	(5) PART NUMBER	(6) DESCRIPTION / USABLE ON CODE	(7) U/M	(8) QTY INC IN UNIT
						GROUP 010604 RESISTOR ASSEMBLY		
						A9000A SM-D-921525		
161	1	XBHZZ	5310-01-057-8778	30655	22NCFMA2-40	NUT,CLINCH	EA	4
161	2	PAHZZ	5305-00-957-6643	96906	MS35190-212	SCREW,MACHINE	EA	2
161	3	PAHZZ	5310-01-100-6991	30655	F92-1660-26	NUT,SELF-LOCKING,HE	EA	2
161	4	XBHZZ		80063	SM-C-414349	LOCK,RETAINING	EA	1
161	5	XBHZZ		78189	3502-10-55	WASHER,SPRING	EA	1
161	6	XBHZZ		80063	SM-B-414350	RIVET	EA	1
161	7	PAHZZ		81349	RER60F3480M	RESISTOR,FXD CMPSN	EA	1
161	8	PAHZZ		81349	RER60F2370M	RESISTOR,FXD CMPSN	EA	1

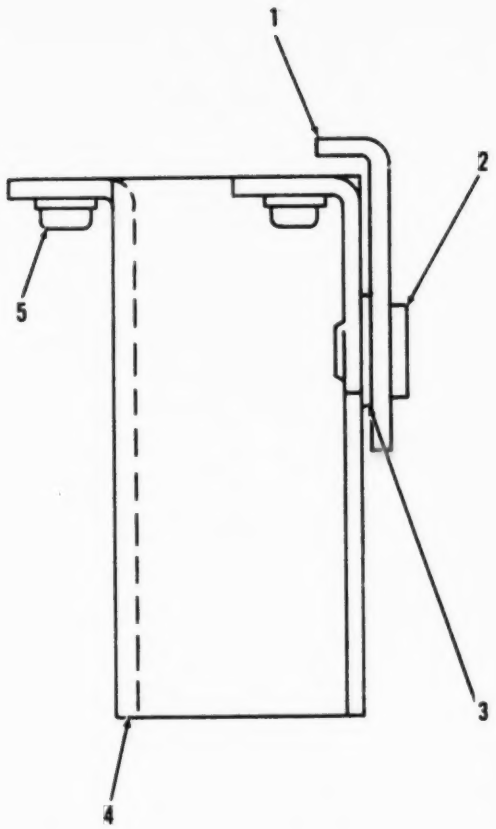

EL6JB064

Figure 162. Power Supply Panel Assembly.

(1) ILLUSTRATION (a) FIG NO	(1) ILLUSTRATION (b) ITEM NO	(2) SMR CODE	(3) NATIONAL STOCK NUMBER	(4) FSCM	(5) PART NUMBER	(6) DESCRIPTION / USABLE ON CODE	(7) U/M	(8) QTY INC IN UNIT
						GROUP 010605 POWER SUPPLY PANEL ASSY		
						A9000A SN-B-921523		
162	1	XBHZZ		80063	SN-C-414349	LOCK,RETAINING	EA	1
162	2	XBHZZ		80063	SN-B-414350	RIVET	EA	1
162	3	XBHZZ	5310-00-754-4264	78189	3502-10-55	WASHER,SPRING TENSI	EA	1
162	4	XAHZZ		80063	SN-D-921520	PANEL,REAR	EA	1
162	5	XBHZZ	5310-01-057-8778	30655	22NCFMA2-40	NUT,CLINCH	EA	3

LEGEND

REF DES	ITEM NO	REF DES	ITEM NO	REF DES	ITEM NO	REF DES	ITEM NO
C9401	1	Q9404	2	R9402	4	R9405	5
Q9401	2	Q9405	2	R9403	4	R9406	5
Q9402	2	Q9406	2	R9404	5	R9407	5
Q9403	2	R9401	3				

PREFIX ALL REFERENCE DESIGNATIONS WITH A9400B

EL6JB110

Figure 163. Semiconductor Device Assembly (Sheet 1 of 2).

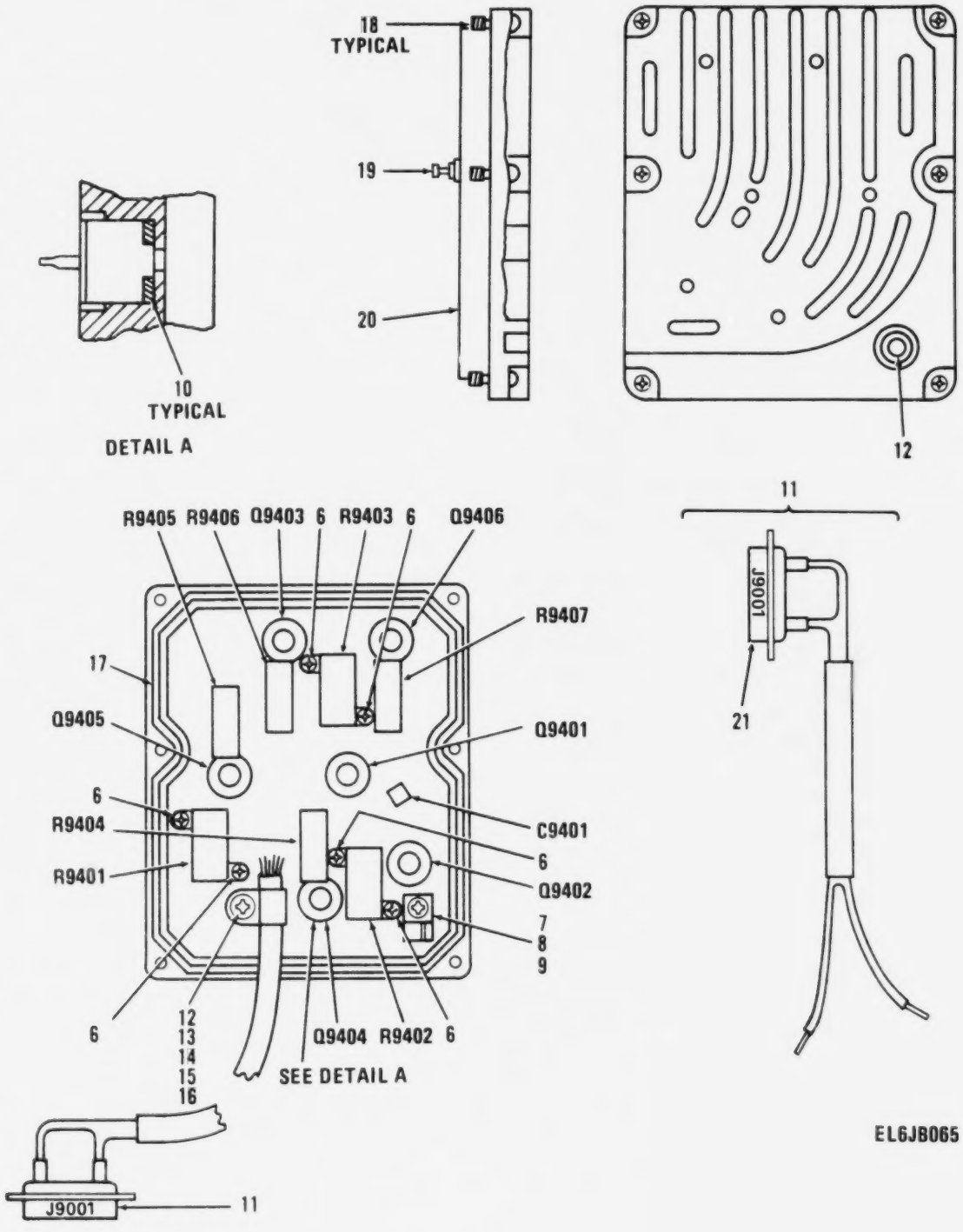

Figure 163. Semiconductor Device Assembly (Sheet 2 of 2).

(1) ILLUSTRATION (a) FIG NO	(1) ILLUSTRATION (b) ITEM NO	(2) SMR CODE	(3) NATIONAL STOCK NUMBER	(4) FSCM	(5) PART NUMBER	(6) DESCRIPTION / USABLE ON CODE	(7) U/M	(8) QTY INC IN UNIT
						GROUP 0107 SEMICONDUCTOR DEVICE ASSY A9400 AND A9400A SM-D-413928 A9400B SM-D-921530		
163	1	PAFZZ	5910-00-010-8720	81349	M39014/02-1343	CAPACITOR,FIXED,CER	EA	1
163	2	PAFZZ		80063	SM-A-921526	TRANSISTOR	EA	6
163	3	PAFZZ	5905-00-583-8680	81349	RER65F15R0R	RESISTOR,FIXED,WIRE	EA	1
163	4	PAFZZ	5905-00-468-5813	81349	RER65F24R9R	RESISTOR,FIXED,WIRE	EA	2
163	5	PAFZZ	5905-01-073-2515	81349	RWR74SR150FS	RESISTOR,FIXED,WIRE	EA	4
163	6	PAFZZ	5305-00-054-5637	96906	MS51957-3	SCREW,MACHINE	EA	6
163	7	PAHZZ	5340-00-853-6424	73957	N11240-18	INSERT,SCREW THREAD	EA	1
163	8	PAHZZ	5340-01-127-4139	80063	SM-B-413901	CLAMP	EA	1
163	9	PAHZZ	5305-00-889-3116	96906	MS35206-213	SCREW,MACHINE	EA	1
163	10	PAFZZ		80063	SM-C-921534	SEAL	EA	6
163	11	AHHHH		80063	SM-D-921510	WRG HARNESS ASSY	EA	1
163	12	PAHZZ	5340-00-823-5249	73957	NM13832-18	INSERT,SCREW THREAD	EA	2
163	13	PAHZZ	5340-00-995-6333	80205	NAS1397P3	CLAMP,LOOP	EA	1
163	14	PAHZZ	5940-00-681-8184	96906	MS0035431-8	TERMINAL,LUG	EA	1
163	15	PAHZZ	5310-00-167-0816	88044	AN960-6	WASHER,FLAT	EA	1
163	16	PAHZZ	5305-00-984-4984	96906	MS35206-227	SCREW,MACHINE	EA	1
163	17	PAFZZ	5330-00-138-4591	80063	SM-B-413930	PACKING,PREFORMED	EA	1
163	18	PAFZZ		80063	SM-C-921533-1	SCREW,EXT	EA	6
163	19	PAFZZ	5940-00-051-6257	81349	SE079B01	TERMINAL,STUD	EA	4
163	20	XBHZZ		80063	SM-D-921531	PLATE,MTG	EA	1
163	21	PAHZZ		71468	DAP-15S (033)	CONNECTOR,PLUG 15 SOCKET TYPE CONTACTS .5 AMP CONTACT RATING	EA	1

LEGEND

REF DES	ITEM NO	REF DES	ITEM NO	REF DES	ITEM NO	REF DES	ITEM NO
CR2101	1	C2101	3	Q2103	6	R2105	12
CR2102	1	C2102	3	R2101	8	R2106	13
CR2103	2	C2103	4	R2102	9	R2107	14
CR2104	1	C2104	5	R2103	10	R2108	14
CR2105	1	Q2101	6	R2104	11	R2109	10
CR2106	1	Q2102	7				

PREFIX ALL REFERENCE DESIGNATIONS WITH A2100A

EL6JB111

Figure 164. Voltage Regulator Assembly (Sheet 1 of 2).

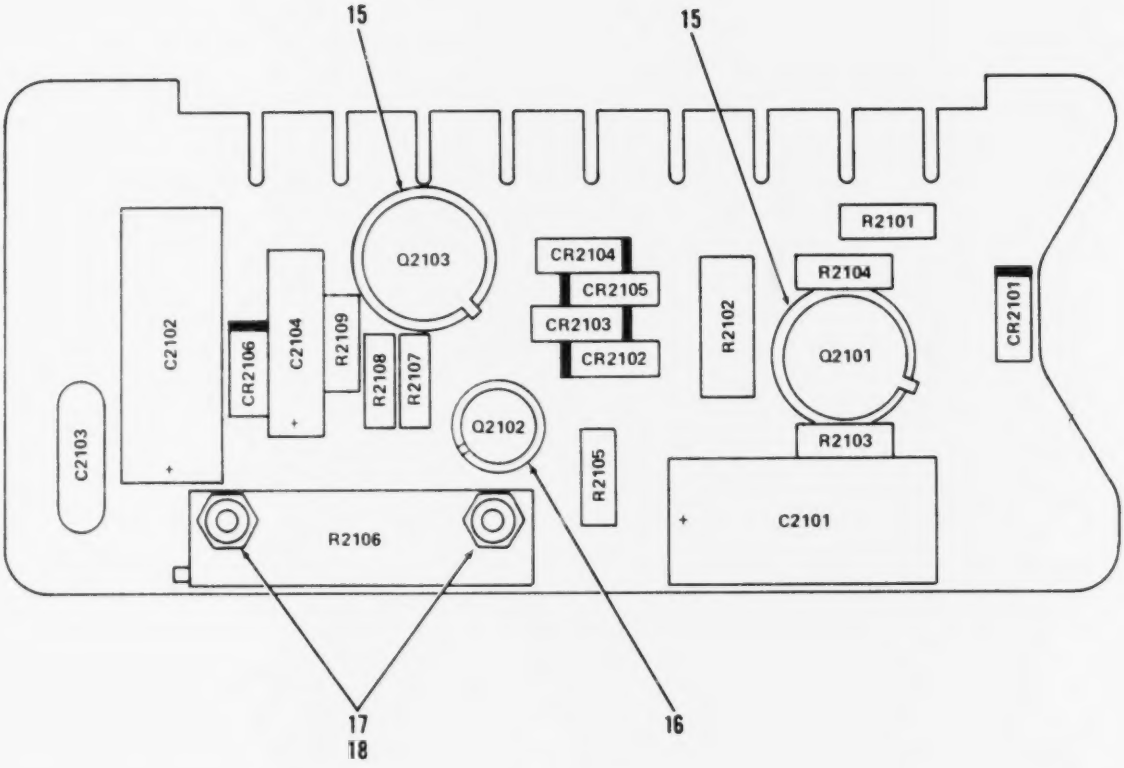

PREFIX ALL REFERENCE DESIGNATIONS WITH A2100A

EL6JB066

Figure 164. Voltage Regulator Assembly (Sheet 2 of 2).

(1) ILLUSTRATION (a) FIG NO	(1) ILLUSTRATION (b) ITEM NO	(2) SMR CODE	(3) NATIONAL STOCK NUMBER	(4) FSCM	(5) PART NUMBER	(6) DESCRIPTION USABLE ON CODE	(7) U/M	(8) QTY INC IN UNIT
						GROUP 010901 VOLTAGE REGULATOR ASSY		
						A2100A SN-D-921166		
164	1	PADZZ	5961-00-087-6047	81349	JANIN645	SEMICONDUCTOR DEVIC	EA	5
164	2	PADZZ	5961-00-995-2310	81349	JANIN752A	SEMICONDUCTOR DEVIC	EA	1
164	3	PADZZ	5910-00-114-0221	81349	M39003/01-3018	CAPACITOR,FIXED,ELE	EA	2
164	4	PADZZ	5910-00-857-5305	18796	855-222X5S0-103M	CAPACITOR,FIXED,CER .01 UF,PORM 20 PCT,100 VDCW	EA	1
164	5	PADZZ	5910-00-007-2003	81349	M39003/01-3009	CAPACITOR,FIXED,ELE	EA	1
164	6	PADZZ	5961-00-949-1440	81349	JAN2N2905A	TRANSISTOR	EA	2
164	7	PADZZ	5961-00-951-8757	81349	JAN2N2222A	TRANSISTOR	EA	1
164	8	PADZZ	5905-00-119-3503	81349	RCR07G271JS	RESISTOR,FIXED,COMP	EA	1
164	9	PADZZ	5905-00-110-0196	81349	RCR20G102JS	RESISTOR,FIXED,COMP	EA	1
164	10	PADZZ	5905-00-139-6046	81349	RCR07G681JS	RESISTOR,FIXED,COMP	EA	2
164	11	PADZZ	5905-00-141-1183	81349	RCR07G101JS	RESISTOR,FIXED,COMP	EA	1
164	12	PADZZ	5905-00-110-7620	81349	RCR07G102JS	RESISTOR,FIXED,COMP	EA	1
164	13	PADZZ	5905-00-682-4264	32997	220W-1-502	RESISTOR,VARIABLE,W 5000 OHMS PLUS 10 PCT,MAX RESISTANCE	EA	1
164	14	PADZZ	5905-00-116-8555	81349	RCR07G153JS	RESISTOR,FIXED,COMP	EA	2
164	15	PADZZ	5961-01-100-3849	80063	SM-8-413797	RETAINER,TRANSISTOR	EA	2
164	16	PADZZ		07047	A-10044DAP BLK	INSULATOR,DISK	EA	1
164	17	PADZZ	5310-01-100-6991	30655	F92-1660-26	NUT,SELF-LOCKING,HE	EA	2
164	18	PADZZ	5305-00-989-0682	96906	MS35206-205	SCREW,MACHINE	EA	2

STOCK NUMBER	FIGURE NO.	ITEM NO.
5910-00-007-2003	139	2
5910-00-007-2003	142	4
5910-00-007-2003	164	5
5910-00-007-2004	148	10
5910-00-007-2004	159	8
5910-00-010-8666	122	4
5910-00-010-8666	132	6
5910-00-010-8666	137	2
5910-00-010-8666	144	7
5910-00-010-8666	148	12
5910-00-010-8666	159	7
5910-00-010-8715	112	1
5910-00-010-8717	144	5
5910-00-010-8720	163	1
5910-00-012-5545	156	8
5910-00-012-5547	132	3
5910-00-018-8913	132	2
5950-00-043-0423	120	8
5310-00-045-3296	105	85
5310-00-045-4007	104	11
5310-00-045-4007	105	27
5910-00-050-8126	105	65
5940-00-051-6257	105	114
5940-00-051-6257	163	19
5305-00-054-5637	104	17
5305-00-054-5637	163	6
5310-00-057-0573	117	5
5355-00-059-9188	105	3
5910-00-061-7043	152	4
5905-00-068-8265	156	25
5320-00-081-7418	107	25
5320-00-081-7418	108	34
5320-00-081-7418	115	34
5320-00-081-7418	116	32
5940-00-082-4922	105	24
5940-00-082-5002	115	36
5310-00-087-0057	153	7
5820-00-087-0061	106	6
5961-00-087-6047	105	30
5961-00-087-6047	109	15
5961-00-087-6047	117	24
5961-00-087-6047	142	1
5961-00-087-6047	144	3
5961-00-087-6047	164	1
5940-00-089-1134	105	74
5970-00-089-8568	105	58
5955-00-089-8584	111	26
5905-00-104-8351	159	10
5905-00-104-8358	109	21
5905-00-104-8358	126	9
5905-00-104-8358	135	12
5905-00-104-8358	150	22
5905-00-104-8358	152	9
5905-00-104-8358	154	16
5905-00-104-8362	132	20
5905-00-104-8363	122	13
5905-00-104-8368	132	25
5905-00-105-7764	108	28
5905-00-105-7764	109	22
5905-00-105-7764	112	8
5905-00-105-7764	113	7
5905-00-105-7764	116	17
5905-00-105-7764	128	11
5905-00-105-7764	130	13
5905-00-105-7764	142	16
5905-00-105-7764	150	20
5905-00-105-7764	154	12
5905-00-105-7765	154	21
5905-00-105-7768	120	11
5905-00-105-7768	142	14
5905-00-105-7768	156	16
5905-00-106-1248	142	24
5905-00-106-1249	137	13
5905-00-106-1278	120	14
5905-00-106-1278	144	28
5905-00-106-1356	107	12
5905-00-106-1356	108	26
5905-00-106-1356	137	16
5905-00-106-1356	148	23
5905-00-106-1356	154	18
5905-00-106-1357	130	16
5905-00-106-1357	132	15
5905-00-106-3666	108	20
5905-00-106-3666	137	19
5905-00-106-3666	144	23
5905-00-106-3666	148	19
5905-00-106-3666	150	16
5905-00-106-3666	152	7
5905-00-106-3666	156	18
5905-00-106-3668	116	19
5905-00-106-9344	159	15
5905-00-107-0656	122	11
5905-00-107-0656	139	11
5905-00-110-0196	164	9
5905-00-110-0388	109	24
5905-00-110-0388	139	6
5905-00-110-0388	144	14
5905-00-110-7620	108	27
5905-00-110-7620	115	23
5905-00-110-7620	120	10
5905-00-110-7620	120	16
5905-00-110-7620	122	9
5905-00-110-7620	128	8
5905-00-110-7620	142	22
5905-00-110-7620	144	19
5905-00-110-7620	148	30
5905-00-110-7620	152	11
5905-00-110-7620	156	20
5905-00-110-7620	164	12
5905-00-110-7622	108	19
5905-00-110-7622	112	10
5905-00-110-7622	113	9
5905-00-110-7622	120	13
5905-00-110-7622	130	14
5905-00-110-7622	135	14
5905-00-110-7622	137	20
5905-00-110-7622	142	18
5905-00-110-7622	150	17
5905-00-110-7622	156	17
5905-00-111-1678	144	29
5905-00-111-1679	115	21
5905-00-111-4727	122	8
5905-00-111-4727	126	6
5905-00-111-4727	128	12
5905-00-111-4727	142	12
5905-00-111-4734	115	26
5905-00-111-4750	107	9
5905-00-111-4750	135	10
5905-00-111-4845	107	10
5905-00-113-4860	116	22
5905-00-113-4860	144	25
5905-00-113-4861	122	10
5905-00-113-4861	135	18
5910-00-113-5277	156	10
5910-00-113-5278	144	6
5910-00-113-5286	144	9
5910-00-113-5475	117	27
5910-00-113-5475	142	5
5910-00-113-5475	144	8
5910-00-113-5475	154	5
5910-00-113-5475	156	3
5910-00-113-5475	156	5
5910-00-113-5689	156	6
5910-00-114-0221	164	3
5910-00-114-0225	108	8
5905-00-114-0710	116	18
5905-00-114-0710	137	18
5905-00-114-0711	108	21
5905-00-114-0711	124	10
5905-00-114-0711	132	22
5905-00-114-0711	135	13
5905-00-114-0711	139	10
5905-00-114-0711	154	14
5961-00-114-5051	159	3
5905-00-114-5343	108	24
5905-00-114-5343	115	24
5905-00-114-5343	116	16
5905-00-114-5343	126	10
5905-00-114-5343	128	9
5905-00-114-5343	132	23

STOCK NUMBER	FIGURE NO.	ITEM NO.
5905-00-114-5343	142	20
5905-00-114-5343	144	12
5905-00-114-5343	152	8
5905-00-115-2261	142	13
5905-00-115-2261	156	23
5905-00-115-3560	132	17
5905-00-115-3560	156	14
5905-00-115-3562	154	13
5905-00-115-7953	107	16
5905-00-115-7953	135	11
5905-00-116-2394	139	12
5905-00-116-8554	115	20
5905-00-116-8554	144	21
5905-00-116-8555	120	15
5905-00-116-8555	137	15
5905-00-116-8555	142	19
5905-00-116-8555	144	27
5905-00-116-8555	156	24
5905-00-116-8555	156	30
5905-00-116-8555	164	14
5905-00-116-8556	108	18
5905-00-116-8556	117	35
5905-00-116-8556	156	19
5925-00-118-1098	105	29
5905-00-118-4559	122	7
5905-00-118-4559	144	30
5905-00-119-3503	148	27
5905-00-119-3503	164	8
5905-00-119-3504	107	17
5905-00-119-3504	108	17
5905-00-119-3504	137	17
5905-00-119-3504	144	16
5905-00-119-3504	148	26
5905-00-119-3505	148	28
5905-00-119-3505	150	19
5905-00-119-8768	108	22
5905-00-119-8768	124	9
5905-00-119-8768	126	7
5905-00-119-8768	148	22
5905-00-119-8768	152	12
5905-00-119-8768	154	20
5905-00-119-8768	156	27
5905-00-119-8768	156	28
5905-00-119-8812	108	23
5905-00-119-8812	156	26
5905-00-120-9152	107	15
5905-00-120-9154	107	11
5905-00-120-9154	122	6
5905-00-120-9154	126	8
5905-00-120-9154	130	15
5905-00-120-9154	139	13
5905-00-120-9154	144	13
5910-00-121-7379	128	4
5905-00-121-9932	142	15
5905-00-121-9932	144	22
5910-00-124-0659	112	2
5910-00-124-0659	113	1
5905-00-126-6683	108	25
5905-00-126-6683	115	25
5905-00-126-6683	116	21
5905-00-126-6683	120	12
5905-00-126-6683	128	13
5905-00-126-6683	132	21
5905-00-126-6683	135	17
5905-00-126-6683	139	8
5905-00-126-6683	144	26
5905-00-126-6683	148	17
5905-00-126-6683	156	15
5910-00-129-6259	158	1
5905-00-131-1255	117	32
5905-00-131-1255	122	12
5905-00-131-1255	135	15
5905-00-131-1255	142	17
5905-00-131-1255	148	21
5905-00-131-1255	150	15
5905-00-135-3973	116	20
5905-00-135-3973	148	25
5905-00-135-3974	132	18
5905-00-135-3974	150	14
5905-00-135-3975	117	33
5905-00-135-3975	142	21
5905-00-135-3975	156	29
5905-00-135-6045	124	12
5905-00-135-6046	148	18
5905-00-135-6046	164	10
5905-00-136-3891	156	22
5905-00-136-8405	154	17
5310-00-137-3419	105	79
5305-00-137-7924	104	1
5305-00-137-7929	115	28
5305-00-137-7929	116	26
5330-00-138-4591	163	17
5305-00-139-7007	160	9
5305-00-139-7008	117	7
5305-00-139-7009	160	6
5305-00-139-7013	117	39
5305-00-139-7093	105	96
5905-00-141-0598	109	23
5905-00-141-0717	107	14
5905-00-141-0717	115	22
5905-00-141-0717	132	14
5905-00-141-0717	137	14
5905-00-141-0717	144	17
5905-00-141-0717	148	29
5905-00-141-0717	150	18
5905-00-141-0717	154	15
5905-00-141-0742	117	37
5905-00-141-0742	132	26
5905-00-141-0742	144	20
5905-00-141-0742	156	13
5905-00-141-0743	107	13
5905-00-141-0743	112	9
5905-00-141-0743	113	8
5905-00-141-0743	117	36
5905-00-141-0744	117	34
5905-00-141-0744	126	11
5905-00-141-0744	128	10
5905-00-141-0744	135	16
5905-00-141-0744	144	24
5905-00-141-0744	148	24
5905-00-141-0744	152	10
5905-00-141-0744	156	21
5905-00-141-1183	124	11
5905-00-141-1183	132	24
5905-00-141-1183	142	23
5905-00-141-1183	148	20
5905-00-141-1183	164	11
5910-00-144-4383	117	29
5305-00-145-2127	105	68
5310-00-150-4133	111	10
5305-00-151-6202	104	2
5305-00-151-6886	109	6
5305-00-151-6889	143	3
5305-00-152-0546	141	2
5305-00-152-0546	143	2
6240-00-155-7836	105	2
5310-00-158-5129	105	123
5310-00-158-5130	105	18
5310-00-158-5131	105	4
5310-00-167-0816	163	15
5310-00-167-0832	105	42
5310-00-167-0833	154	23
5310-00-167-0834	105	86
5307-00-169-5020	105	80
5950-00-170-4153	115	39
5950-00-170-4153	116	34
6210-00-176-4928	105	101
5940-00-177-7974	117	14
6210-00-183-0513	105	100
5910-00-185-9045	117	26
5910-00-185-9045	137	7
5910-00-185-9045	139	1
5910-00-185-9045	142	3
5310-00-193-7577	133	9
5905-00-199-7492	159	12
5910-00-201-0962	148	11
5950-00-201-7174	122	14
5320-00-205-7930	105	104
4010-00-221-9445	105	109
4010-00-221-9445	105	110

STOCK NUMBER	FIGURE NO.	ITEM NO.
5905-00-228-5506	154	19
5975-00-241-5146	105	111
5305-00-253-5609	104	4
5910-00-254-8169	154	7
5905-00-258-5572	158	2
5325-00-262-9130	109	9
5325-00-262-9130	118	19
5325-00-262-9130	133	15
5325-00-262-9130	140	23
5325-00-262-9130	146	12
5910-00-267-1753	105	75
5325-00-276-4993	140	9
5365-00-285-6688	104	27
5950-00-309-7904	122	5
5305-00-336-2152	105	90
3020-00-369-9159	104	25
5905-00-400-4528	132	13
5905-00-400-4528	144	15
5950-00-403-0563	124	14
5940-00-403-2836	109	29
5940-00-403-2837	109	28
5905-00-408-5254	159	11
5962-00-424-9535	122	16
6210-00-435-4780	105	1
5950-00-449-4487	108	15
5910-00-455-4304	154	8
5910-00-456-0319	108	5
5820-00-457-0568	107	32
5820-00-457-0569	104	7
5820-00-457-0575	104	15
5910-00-461-8294	108	4
5910-00-464-8946	107	2
5910-00-464-8946	109	18
5910-00-464-8946	116	1
5905-00-468-5813	163	4
5905-00-481-7883	159	13
5905-00-485-4545	132	16
5905-00-485-4545	139	7
5820-00-491-5256	104	36
5910-00-495-0042	154	6
5910-00-495-0042	156	7
5305-00-543-2394	104	10
5310-00-543-2410	105	36
5310-00-543-2410	111	9
5310-00-543-2410	117	4
5310-00-543-2410	140	11
5310-00-543-2410	157	10
5310-00-543-5060	104	18
5310-00-543-5060	114	5
5310-00-543-5060	117	9
5310-00-543-5060	153	6
5960-00-548-3072	107	20
5365-00-550-5937	114	18
5905-00-552-5490	105	99
5940-00-553-2471	105	121
5305-00-558-4887	105	92
5305-00-558-4889	105	35
5961-00-565-5092	159	1
5310-00-576-0900	117	11
5961-00-577-6214	105	47
5910-00-581-8492	150	4
5310-00-582-9176	105	73
5310-00-582-9176	118	14
5310-00-582-9176	133	8
5310-00-582-9176	140	15
5310-00-582-9176	146	9
5310-00-582-9176	158	8
5910-00-583-1589	116	5
5905-00-583-8680	163	3
5330-00-584-0265	105	112
5310-00-595-6211	158	9
5910-00-615-9452	108	6
5910-00-615-9452	116	8
5310-00-616-3554	105	77
5310-00-616-3554	117	12
5355-00-616-9659	105	7
5310-00-660-2971	154	25
5910-00-681-7617	115	4
5940-00-681-8184	105	88
5940-00-681-8184	163	14
5905-00-682-1330	139	9
5905-00-682-4264	132	19
5905-00-682-4264	164	13
5935-00-702-4199	158	10
5910-00-702-9790	115	10
5950-00-703-0907	107	7
5999-00-713-0913	142	26
5910-00-726-2448	108	7
5910-00-726-8695	116	7
5910-00-726-8696	124	3
5960-00-729-5343	107	28
5340-00-729-6763	105	67
5961-00-752-6163	120	1
5310-00-754-4264	162	3
5935-00-760-3219	105	9
5935-00-762-0414	133	16
5305-00-762-7482	111	23
5305-00-762-7482	114	6
5935-00-764-2135	158	14
5340-00-782-8737	105	45
5935-00-800-0813	105	53
5930-00-803-4570	105	56
5910-00-805-6628	148	8
5910-00-805-6636	152	1
5910-00-806-0668	115	5
5910-00-806-0668	137	5
5910-00-807-1527	107	4
5935-00-813-5874	158	15
5310-00-818-5424	105	41
5905-00-820-4359	144	18
5935-00-823-0752	105	16
5930-00-823-0764	105	55
5935-00-823-0765	105	14
5910-00-823-1339	150	9
5995-00-823-2599	104	39
5995-00-823-2600	104	41
5995-00-823-2602	104	43
5995-00-823-2603	104	42
6105-00-823-2604	105	66
5945-00-823-2606	105	44
5995-00-823-2608	104	44
5925-00-823-2615	105	48
5995-00-823-2934	104	40
5995-00-823-2935	104	46
5995-00-823-2937	104	45
5950-00-823-3239	105	71
5999-00-823-3249	146	10
5340-00-823-5249	163	12
5305-00-823-5833	104	14
5305-00-823-5834	105	102
5315-00-823-8764	104	22
5940-00-828-8247	114	15
5961-00-833-3043	130	1
5961-00-833-3043	144	4
5305-00-833-8615	117	46
5910-00-842-3086	128	5
5961-00-846-9157	117	25
5961-00-846-9157	156	2
5915-00-849-3466	133	3
5915-00-849-3467	133	1
5320-00-850-2273	105	120
5340-00-852-7297	105	39
5955-00-853-5838	111	13
5820-00-853-5884	133	5
5955-00-853-5909	111	1
5820-00-853-5916	106	4
5820-00-853-5917	106	2
5820-00-853-5918	106	3
5945-00-853-5945	140	4
5945-00-853-5945	159	9
5945-00-853-5946	140	5
5820-00-853-5962	118	10
5955-00-853-6027	111	2
5355-00-853-6353	105	6
5955-00-853-6372	111	16
5995-00-853-6375	133	7
5999-00-853-6378	140	16
5355-00-853-6384	105	17
5915-00-853-6400	140	7
5340-00-853-6424	160	12

STOCK NUMBER	FIGURE NO.	ITEM NO.
5340-00-853-6424	163	7
5910-00-853-6427	124	6
5945-00-853-6450	118	8
5955-00-853-6451	111	3
5305-00-853-6513	114	3
5905-00-853-6516	105	46
5915-00-853-6528	118	1
5955-00-853-6531	111	17
5955-00-853-6532	111	15
5955-00-853-6533	111	14
5999-00-853-6756	133	10
5995-00-853-6775	104	38
5935-00-853-6838	140	18
5999-00-853-6860	140	20
5915-00-853-8583	118	2
5310-00-853-9676	105	5
5955-00-853-9708	111	5
5950-00-854-2814	140	3
5305-00-855-0962	119	4
5305-00-855-0962	121	4
5305-00-855-0962	123	4
5305-00-855-0962	125	4
5305-00-855-0962	127	4
5305-00-855-0962	129	4
5305-00-855-0962	131	4
5305-00-855-0962	138	5
5305-00-855-0962	147	4
5305-00-855-0962	149	4
5305-00-855-0962	151	4
5305-00-855-0962	153	4
5305-00-855-0962	155	2
5305-00-855-0970	138	4
5330-00-856-4754	105	61
5910-00-857-5305	117	28
5910-00-857-5305	120	4
5910-00-857-5305	122	2
5910-00-857-5305	126	1
5910-00-857-5305	128	2
5910-00-857-5305	130	4
5910-00-857-5305	132	9
5910-00-857-5305	135	1
5910-00-857-5305	142	7
5910-00-857-5305	152	2
5910-00-857-5305	164	4
5820-00-858-6463	118	3
5820-00-858-6464	104	28
5820-00-858-6464	104	37
5820-00-858-6476	106	7
5820-00-858-6483	118	15
5930-00-858-6531	114	23
5315-00-858-6642	104	26
5820-00-859-2585	105	20
5915-00-871-5016	105	23
5340-00-873-2215	104	9
5355-00-874-3594	105	81
5930-00-876-2353	105	97
5955-00-879-1461	111	4
5310-00-883-5931	105	28
5820-00-884-2456	104	8
3020-00-884-2467	105	95
3020-00-884-2468	105	89
5820-00-884-2472	104	24
5360-00-884-2473	104	13
5820-00-884-2475	146	6
5820-00-884-2477	146	8
5820-00-884-2478	146	3
3040-00-884-2483	105	94
5820-00-884-2492	105	51
9905-00-884-2496	105	108
5820-00-884-2498	105	52
5820-00-884-9960	146	2
5905-00-885-2172	159	14
5305-00-889-2997	105	63
5305-00-889-2997	117	13
5305-00-889-2997	140	10
5305-00-889-3000	105	76
5305-00-889-3001	105	12
5305-00-889-3116	111	11
5305-00-889-3116	157	8
5305-00-889-3116	157	9
5305-00-889-3116	158	7
5305-00-889-3116	163	9
5305-00-889-3118	114	16
5305-00-889-3118	117	1
5910-00-890-0554	117	30
5910-00-890-0554	120	5
5910-00-890-0554	126	2
5910-00-890-0554	148	5
5910-00-890-0554	156	4
5950-00-891-9158	112	6
5950-00-891-9158	113	5
5950-00-891-9158	120	7
5950-00-891-9158	128	6
5950-00-891-9158	130	10
5950-00-891-9158	132	11
5950-00-891-9158	150	11
5935-00-891-9159	112	5
5935-00-891-9159	113	4
5915-00-892-3011	146	1
5915-00-892-3013	104	16
5910-00-892-3027	120	3
5910-00-892-3027	124	5
5910-00-892-3027	130	9
5910-00-892-3027	135	5
5910-00-892-3027	142	6
5985-00-892-3200	105	21
5905-00-892-6543	105	91
3120-00-897-6873	118	17
3120-00-897-6873	133	11
3120-00-897-6873	140	22
3120-00-897-6873	146	11
5915-00-899-4169	118	4
5915-00-899-7910	118	5
5935-00-901-4717	159	17
5935-00-901-4718	140	14
5950-00-904-1057	107	23
5950-00-904-1057	108	32
5950-00-904-1057	115	41
5950-00-904-1057	116	36
5961-00-911-6015	107	8
5961-00-911-6015	112	7
5961-00-911-6015	113	6
5961-00-911-6015	124	8
5961-00-911-6015	135	9
5961-00-911-6015	137	11
5961-00-911-6015	148	16
5961-00-911-6015	150	13
5961-00-911-6015	152	6
5961-00-921-3781	142	2
5910-00-924-4307	107	3
5910-00-924-4307	108	2
5910-00-924-4307	115	11
5910-00-924-4307	116	6
5910-00-924-4307	150	6
5961-00-925-3777	120	9
5961-00-925-3777	126	5
5961-00-925-3777	128	7
5961-00-925-3777	130	12
5961-00-925-3777	132	12
5961-00-925-3777	137	12
5961-00-925-3777	139	5
5961-00-925-3777	142	9
5961-00-925-3777	144	11
5961-00-925-3777	156	12
5961-00-929-1600	159	2
5310-00-934-9738	144	35
5310-00-934-9751	105	83
5961-00-935-0138	105	84
5940-00-937-8028	109	27
5910-00-938-1015	148	7
5961-00-938-1135	107	1
5961-00-938-1135	117	23
5961-00-938-1135	120	2
5961-00-938-1135	122	1
5961-00-938-1135	124	1
5961-00-938-1135	130	2
5961-00-938-1135	132	1
5961-00-938-1135	137	1
5961-00-938-1135	144	2
5961-00-938-1135	148	3

STOCK NUMBER	FIGURE NO.	ITEM NO.
5961-00-938-1135	150	1
5961-00-938-1135	156	1
5961-00-938-5250	115	1
5961-00-938-5251	108	1
5950-00-938-5280	109	19
5950-00-938-5281	109	25
5910-00-938-7506	108	9
5910-00-938-7506	115	3
5910-00-938-7506	116	3
5910-00-938-7517	115	6
5910-00-938-7518	115	9
5910-00-938-7531	130	7
5910-00-938-7532	130	6
5310-00-939-0903	105	50
5961-00-946-7707	122	17
5961-00-946-7707	144	33
5910-00-947-5702	132	4
5910-00-947-5702	154	4
5935-00-948-5867	117	20
5961-00-949-1440	117	22
5961-00-949-1440	142	11
5961-00-949-1440	164	6
5935-00-949-5647	157	15
5310-00-950-1310	146	5
5310-00-951-4679	104	12
5310-00-951-4679	140	12
5961-00-951-8757	117	31
5961-00-951-8757	139	4
5961-00-951-8757	142	10
5961-00-951-8757	144	10
5961-00-951-8757	154	10
5961-00-951-8757	156	11
5961-00-951-8757	164	7
5305-00-954-3938	144	36
5305-00-957-6265	105	13
5305-00-957-6643	161	2
5305-00-958-6381	156	33
5305-00-958-6382	160	1
5950-00-964-7450	116	10
5950-00-964-7450	137	8
5305-00-983-6730	114	8
5910-00-983-6866	156	9
5305-00-984-4978	105	22
5305-00-984-4983	105	34
5305-00-984-4984	105	26
5305-00-984-4984	163	16
5305-00-984-4988	105	38
5305-00-984-4989	104	30
5305-00-984-4989	105	40
5955-00-985-8945	111	20
5305-00-988-1167	114	7
5305-00-988-1167	114	11
5365-00-988-2387	104	23
5305-00-988-5747	111	30
5305-00-988-5747	119	5
5305-00-988-5747	121	5
5305-00-988-5747	123	5
5305-00-988-5747	125	5
5305-00-988-5747	127	5
5305-00-988-5747	129	5
5305-00-988-5747	131	5
5305-00-988-5747	134	5
5305-00-988-5747	138	6
5305-00-988-5747	147	5
5305-00-988-5747	149	5
5305-00-988-5747	151	5
5305-00-988-5747	155	5
5305-00-989-0682	105	57
5305-00-989-0682	117	18
5305-00-989-0682	132	30
5305-00-989-0682	139	15
5305-00-989-0682	164	18
5970-00-989-8333	107	22
5970-00-989-8333	117	38
5970-00-989-8333	120	19
5970-00-989-8333	142	25
5970-00-989-8333	152	16
5935-00-990-5580	105	15
5821-00-990-6461	115	27
5821-00-990-6461	116	23
5910-00-990-6815	108	3
5910-00-990-6840	107	5
5910-00-992-3306	130	8
5910-00-992-3306	148	14
5305-00-993-0190	111	8
5305-00-993-0190	117	3
5961-00-995-2310	144	1
5961-00-995-2310	148	1
5961-00-995-2310	164	2
5340-00-995-6333	163	13
5820-00-999-7295	158	16
5820-00-999-7295	159	24
5950-01-004-7262	135	8
5950-01-004-7262	137	10
5905-01-009-5503	159	16
5930-01-011-3169	105	25
5950-01-011-3189	128	14
5950-01-011-3190	128	15
5950-01-011-3191	128	16
5950-01-011-3192	132	27
5950-01-011-3193	152	15
5950-01-011-3195	150	24
5950-01-011-3415	116	24
5950-01-011-3417	124	13
5950-01-011-4243	135	20
5950-01-011-4244	135	19
5950-01-011-4248	115	17
5950-01-011-4249	116	13
5950-01-011-4799	132	28
5950-01-011-4800	107	19
5950-01-011-4801	107	18
5950-01-011-4802	126	12
5950-01-011-4808	116	14
5950-01-011-4809	130	11
5950-01-011-5527	135	21
5950-01-011-5529	152	13
5950-01-012-1367	126	13
5950-01-012-1369	115	18
5950-01-012-6300	130	17
5950-01-013-0280	115	15
5950-01-013-0280	116	11
5950-01-013-4181	117	10
5905-01-024-0806	150	21
5910-01-029-3822	113	3
5910-01-029-8906	148	6
5910-01-030-1770	115	8
5910-01-030-1770	132	8
5910-01-030-1771	154	2
5910-01-031-0447	148	4
5910-01-031-0447	150	10
5910-01-033-0425	122	3
5910-01-038-5395	152	3
5910-01-038-5395	159	6
5910-01-040-1232	150	5
5910-01-040-1232	154	3
5910-01-043-5772	148	9
5910-01-043-5772	150	2
5910-01-043-6891	112	3
5910-01-043-6891	135	3
5910-01-043-6891	137	4
5910-01-043-6891	150	8
5910-01-043-6892	116	4
5910-01-043-6899	132	7
5910-01-044-5615	112	4
5910-01-044-5615	115	2
5910-01-044-5615	116	2
5910-01-044-8562	135	4
5910-01-044-8563	128	1
5910-01-044-8563	132	5
5910-01-045-4226	135	7
5910-01-053-6833	154	1
5310-01-057-8778	105	116
5310-01-057-8778	161	1
5310-01-057-8778	162	5
5910-01-058-0229	150	7
5905-01-073-2515	163	5
5910-01-073-9874	158	6
5910-01-073-9874	159	4
5820-01-077-4505	104	32
5820-01-092-7956	104	33

STOCK NUMBER	FIGURE NO.	ITEM NO.
5915-01-092-8065	140	8
5820-01-092-8067	104	19
5820-01-092-8097	140	1
5820-01-093-1925	140	2
5950-01-098-7909	115	16
5950-01-098-7909	116	12
5950-01-100-0242	137	9
5961-01-100-3849	109	26
5961-01-100-3849	164	15
5310-01-100-6991	132	31
5310-01-100-6991	139	16
5310-01-100-6991	156	34
5310-01-100-6991	161	3
5310-01-100-6991	164	17
5820-01-102-7727	140	17
5340-01-124-1469	140	13
7690-01-125-1398	104	3
5950-01-126-2909	108	13
5950-01-126-2910	108	14
5910-01-126-4735	146	7
5340-01-126-5334	111	7
5305-01-126-7312	105	19
5310-01-127-1408	105	82
5340-01-127-4139	163	8
5820-01-129-4157	118	13
5305-01-133-0155	105	8
5305-01-133-3862	160	10

FSCM	PART NUMBER	FIGURE NO.	ITEM NO.
07047	A-10042	107	22
07047	A-10042	117	38
07047	A-10042	120	19
07047	A-10042	142	25
07047	A-10042	152	16
07047	A-10044DAP BLK	108	31
07047	A-10044DAP BLK	112	13
07047	A-10044DAP BLK	113	11
07047	A-10044DAP BLK	115	29
07047	A-10044DAP BLK	124	16
07047	A-10044DAP BLK	126	14
07047	A-10044DAP BLK	128	17
07047	A-10044DAP BLK	130	20
07047	A-10044DAP BLK	132	29
07047	A-10044DAP BLK	137	22
07047	A-10044DAP BLK	139	14
07047	A-10044DAP BLK	144	32
07047	A-10044DAP BLK	148	34
07047	A-10044DAP BLK	150	27
07047	A-10044DAP BLK	154	26
07047	A-10044DAP BLK	156	32
07047	A-10044DAP BLK	164	16
88044	AN565D4H2	105	90
88044	AN960-10L	105	86
88044	AN960-6	163	15
88044	AN960-6L	105	42
88044	AN960-8L	154	23
81541	AP2-1A	105	29
81541	AP2-1B	105	48
97315	BC4519	105	71
97315	BC4521	160	2
82050	BR8-600A1-F1-26V	140	4
82050	BR8-600A1-F1-26V	159	9
13103	B375-120-30	117	44
78553	C-18695SS-012	111	31
78553	C-18695SS-012	117	40
78553	C-18695SS-012	119	6
78553	C-18695SS-012	121	6
78553	C-18695SS-012	123	6
78553	C-18695SS-012	125	6
78553	C-18695SS-012	127	6
78553	C-18695SS-012	129	6
78553	C-18695SS-012	131	6
78553	C-18695SS-012	134	6
78553	C-18695SS-012	136	6
78553	C-18695SS-012	138	7
78553	C-18695SS-012	147	6
78553	C-18695SS-012	149	6
78553	C-18695SS-012	151	6
78553	C-18695SS-012	155	6
02735	CA3018A	122	16
02735	CA3075F	137	21
81349	CC20CH040C	116	5
81349	CC20CH4R0C	124	4
81349	CC20TH120G	115	12
81349	CC20UJ3R0C	126	3
81349	CC20UJ3R0C	128	3
81349	CC20UJ8R0C	126	4
81349	CC22CH100C	116	7
81349	CC22CH120G	124	3
81349	CC22CH180G	108	6
81349	CC22CH180G	116	8
81349	CC22CH5R0C	108	7
81349	CC22CH7R0D	115	5
81349	CC22CH7R0D	137	5
81349	CC22CH8R0C	107	4
81349	CC22CK020C	115	4
81349	CC22RH200G	124	6
81349	CC22SH360G	148	8
81349	CC22UJ080C	115	10
81349	CC22UJ100C	152	4
81349	CC22UJ150G	150	9
81349	CC22UJ180G	128	5
81349	CC22UJ560G	150	4
81349	CC22UK1R0C	152	1
81349	CC30LH470F	130	7
81349	CC30PH470F	130	6
81349	CK61BX331M	139	3
81349	CK61BX471K	156	9
81349	CL318Q020MPG	109	17
81349	CMR04E240J0DR	122	3
81349	CMR05C070D0DL	135	6
81349	CMR05C100D0DR	154	1
81349	CMR05C120J0DR	135	7
81349	CMR05C2R0DPDP	108	11
81349	CMR05E200J0DR	154	2
81349	CMR05E300G0DR	112	3
81349	CMR05E300G0DR	135	3
81349	CMR05E300G0DR	137	4
81349	CMR05E300G0DR	150	8
81349	CMR05E560G0DL	115	7
81349	CMR05E620FPDM	113	2
81349	CMR05E680G0DR	112	4
81349	CMR05E680G0DR	115	2
81349	CMR05E680G0DR	116	2
81349	CMR05F101G0DR	116	4
81349	CMR05F111G0DR	135	4
81349	CMR05F121G0DR	132	7
81349	CMR05F151F0DL	130	5
81349	CMR05F151G0DR	115	8
81349	CMR05F151G0DR	132	8
81349	CMR05F161G0DL	120	6
81349	CMR05F181F0DL	130	3
81349	CMR05F181F0DL	135	2
81349	CMR05F221G0DR	128	1
81349	CMR05F221G0DR	132	5
81349	CMR05F271G0DR	148	9
81349	CMR05F271G0DR	150	2
81349	CMR05F331G0DR	148	4
81349	CMR05F331G0DR	150	10
81349	CMR05F391G0DR	152	3
81349	CMR05F391G0DR	159	6
81349	CMR06F102G0DR	148	6
81349	CMR06F162G0DR	150	7
81349	CMR06F302G0DR	150	5
81349	CMR06F302G0DR	154	3
81349	CMR06F511G0DR	113	3
93790	CM06FC511JN3	148	13
26769	CNW685C050K1	109	16
71616	CPC-1953-6B	105	39
81349	CP53B1EG105K1	158	1
92702	DA-15P (C33)	157	11

FSCM	PART NUMBER	FIGURE NO.	ITEM NO.
71468	DAP-15S (033)	163	21
72136	DM15F511G	108	4
72136	DM15F511K	108	5
99515	EP-6D-1	156	8
99515	EP-6D-10	105	65
99515	EP-6D-3	132	2
99515	EP-6D-6	132	3
95566	FB0460-1810-0	115	39
95566	FB0460-1810-0	116	34
38443	FC-1220-FF	114	17
38443	FC-1624-FF	114	13
98291	FTSM-14-P20-BLK	109	27
98291	FTSM-14-P20-BRN	109	29
98291	FTSM-14-P20-VIO	109	28
30655	F92-1660-26	132	31
30655	F92-1660-26	139	16
30655	F92-1660-26	156	34
30655	F92-1660-26	161	3
30655	F92-1660-26	164	17
30655	F92-1660-40	105	73
30655	F92-1660-40	118	14
30655	F92-1660-40	133	8
30655	F92-1660-40	140	15
30655	F92-1660-40	146	9
30655	F92-1660-40	158	8
76348	GB221	140	9
01121	GWE-6166A	105	46
99515	HE1-104E	132	4
99515	HE1-104E	154	4
03877	HP35W-1C-4	105	82
03877	HP35W-1C-5	105	87
81349	JAN1N1202A	105	84
81349	JAN1N4148	107	1
81349	JAN1N4148	117	23
81349	JAN1N4148	120	2
81349	JAN1N4148	122	1
81349	JAN1N4148	124	1
81349	JAN1N4148	130	2
81349	JAN1N4148	132	1
81349	JAN1N4148	137	1
81349	JAN1N4148	144	2
81349	JAN1N4148	148	3
81349	JAN1N4148	150	1
81349	JAN1N4148	156	1
81349	JAN1N4942	159	1
81349	JAN1N4944	159	2
81349	JAN1N4948	159	3
81349	JAN1N538	105	47
81349	JAN1N645	105	30
81349	JAN1N645	109	15
81349	JAN1N645	117	24
81349	JAN1N645	142	1
81349	JAN1N645	144	3
81349	JAN1N645	164	1
81349	JAN1N752A	144	1
81349	JAN1N752A	148	1
81349	JAN1N752A	164	2
81349	JAN1N757A	130	1
81349	JAN1N757A	144	4
81349	JAN1N759A	117	25
81349	JAN1N759A	156	2
81349	JAN1N965B	120	1
81349	JAN2N2222A	117	31
81349	JAN2N2222A	139	4
81349	JAN2N2222A	142	10
81349	JAN2N2222A	144	10
81349	JAN2N2222A	154	10
81349	JAN2N2222A	156	11
81349	JAN2N2222A	164	7
81349	JAN2N2905A	117	22
81349	JAN2N2905A	142	11
81349	JAN2N2905A	164	6
81349	JAN2N2907A	120	9
81349	JAN2N2907A	126	5
81349	JAN2N2907A	128	7
81349	JAN2N2907A	130	12
81349	JAN2N2907A	132	12
81349	JAN2N2907A	137	12
81349	JAN2N2907A	139	5
81349	JAN2N2907A	142	9
81349	JAN2N2907A	144	11
81349	JAN2N2907A	156	12
81349	JAN2N3251A	107	8
81349	JAN2N3251A	112	7
81349	JAN2N3251A	113	6
81349	JAN2N3251A	124	8
81349	JAN2N3251A	135	9
81349	JAN2N3251A	137	11
81349	JAN2N3251A	148	16
81349	JAN2N3251A	150	13
81349	JAN2N3251A	152	6
81349	JAN6205	107	20
81349	JM38510/10102B1X	144	31
91929	JX-46	105	55
81349	LC35YT2	105	100
81349	LH89/1	105	101
03038	LP35223-27	105	8
03038	LP35223-29	105	19
00141	L2-2	105	67
75351	ML18E 11.525MHZ	148	32
96906	MS0035431-8	105	88
96906	MS0035431-8	163	14
96906	MS14046-7	135	8
96906	MS14046-7	137	10
96906	MS14046-8	120	8
96906	MS15795-2	153	7
96906	MS15795-803	158	9
96906	MS16535-12	107	25
96906	MS16535-12	108	34
96906	MS16535-12	115	34
96906	MS16535-12	116	32
96906	MS16535-152	105	120
96906	MS171434	114	25
96906	MS18212-12	117	46
96906	MS20450C8AD6	105	104
96906	MS21318-13	104	4
96906	MS24547-1	105	56
96906	MS24584-23	105	34
96906	MS24629-12	138	4
96906	MS24629-3	119	4
96906	MS24629-3	121	4
96906	MS24629-3	123	4
96906	MS24629-3	125	4
96906	MS24629-3	127	4
96906	MS24629-3	129	4
96906	MS24629-3	131	4
96906	MS24629-3	138	5
96906	MS24629-3	147	4
96906	MS24629-3	149	4
96906	MS24629-3	151	4
96906	MS24629-3	153	4
96906	MS24629-3	155	2
96906	MS25082-2	154	25
96906	MS25237-327	105	2
96906	MS27183-3	104	12
96906	MS27183-3	140	12
96906	MS27183-4	146	5
96906	MS28775-012	105	112
96906	MS3181-14N	105	15
96906	MS35190-212	161	2
96906	MS35190-234	105	13
96906	MS35206-202	111	23
96906	MS35206-202	114	6
96906	MS35206-203	114	16
96906	MS35206-203	117	1
96906	MS35206-204	114	7
96906	MS35206-204	114	11
96906	MS35206-205	105	57
96906	MS35206-205	117	18
96906	MS35206-205	132	30
96906	MS35206-205	139	15
96906	MS35206-205	164	18
96906	MS35206-206	160	1
96906	MS35206-207	144	36
96906	MS35206-208	156	33
96906	MS35206-213	111	11
96906	MS35206-213	157	6
96906	MS35206-213	157	9
96906	MS35206-213	158	7
96906	MS35206-213	163	9

FSCM	PART NUMBER	FIGURE NO.	ITEM NO.
96906	MS35206-214	111	8
96906	MS35206-214	117	3
96906	MS35206-215	105	63
96906	MS35206-215	117	13
96906	MS35206-215	140	10
96906	MS35206-218	114	8
96906	MS35206-221	105	22
96906	MS35206-227	105	26
96906	MS35206-227	163	16
96906	MS35206-228	105	38
96906	MS35206-229	104	30
96906	MS35206-229	105	40
96906	MS35206-230	105	76
96906	MS35206-231	105	12
96906	MS35223-14	105	35
96906	MS35265-14	105	92
96906	MS35265-27	104	10
96906	MS35333-36	133	9
96906	MS35335-29	105	77
96906	MS35335-29	117	12
96906	MS35335-86	105	50
96906	MS35338-39	104	18
96906	MS35338-39	114	5
96906	MS35338-39	117	9
96906	MS35338-39	153	6
96906	MS35338-40	105	36
96906	MS35338-40	111	9
96906	MS35338-40	117	4
96906	MS35338-40	140	11
96906	MS35338-40	157	10
96906	MS35338-41	104	11
96906	MS35338-41	105	27
96906	MS35338-43	105	85
96906	MS35649-222	144	35
96906	MS35650-302	105	83
96906	MS51957-3	104	17
96906	MS51957-3	163	6
96906	MS75008-33	116	10
96906	MS75008-33	137	8
96906	MS75008-42	107	7
96906	MS75084-5	122	5
96906	MS77070-1	117	14
96906	MS91525-1	105	7
02615	M37AS440-5CR	160	10
81349	M39003/01-3000	117	26
81349	M39003/01-3000	137	7
81349	M39003/01-3000	139	1
81349	M39003/01-3000	142	3
81349	M39003/01-3006	117	27
81349	M39003/01-3006	142	5
81349	M39003/01-3006	144	8
81349	M39003/01-3006	154	5
81349	M39003/01-3006	156	3
81349	M39003/01-3006	156	5
81349	M39003/01-3009	139	2
81349	M39003/01-3009	142	4
81349	M39003/01-3009	164	5
81349	M39003/01-3015	156	6
81349	M39003/01-3018	164	3
81349	M39003/01-3026	117	29
81349	M39003/01-3067	154	8
81349	M39003/01-3069	148	11
81349	M39003/01-3073	154	7
81349	M39003/01-3076	154	6
81349	M39003/01-3076	156	7
81349	M39003/01-3088	148	10
81349	M39006/09-8743	158	6
81349	M39006/09-8743	159	4
81349	M39014/01-0386	137	6
81349	M39014/01-0416	137	3
81349	M39014/01-1327	108	8
81349	M39014/01-1357	122	4
81349	M39014/01-1357	132	6
81349	M39014/01-1357	137	2
81349	M39014/01-1357	144	7
81349	M39014/01-1357	148	12
81349	M39014/01-1357	159	7
81349	M39014/01-1360	128	4
81349	M39014/01-1563	156	10
81349	M39014/01-1569	112	1
81349	M39014/01-1575	112	2
81349	M39014/01-1575	113	1
81349	M39014/01-1587	144	6
81349	M39014/01-1593	144	5
81349	M39014/02-1343	163	1
81349	M39014/02-1356	144	9
81349	M39022/01-1681	105	75
81349	M39022/02-1196	158	4
81349	M39022/02-1214	159	5
81349	M39024/10-02	158	10
81349	M39024/10-04	158	14
81349	M39024/10-06	158	15
80205	NAS1397P3	163	13
80205	NAS1397P4N	105	45
80205	NAS620-3L	117	11
80205	NAS620C4	117	5
73957	NM13832-18	163	12
73957	N11240-18	160	12
73957	N11240-18	163	7
81349	PC51H160	148	7
81349	PC51J110	130	8
81349	PC51J110	148	14
81349	PC51J5R5	107	3
81349	PC51J5R5	108	2
81349	PC51J5R5	115	11
81349	PC51J5R5	116	6
81349	PC51J5R5	150	6
81349	RCR07G100JS	122	11
81349	RCR07G100JS	139	11
81349	RCR07G101JS	124	11
81349	RCR07G101JS	132	24
81349	RCR07G101JS	142	23
81349	RCR07G101JS	148	20
81349	RCR07G101JS	164	11
81349	RCR07G102JS	108	27
81349	RCR07G102JS	115	23
81349	RCR07G102JS	120	10
81349	RCR07G102JS	120	16
81349	RCR07G102JS	122	9
81349	RCR07G102JS	128	8
81349	RCR07G102JS	142	22
81349	RCR07G102JS	144	19
81349	RCR07G102JS	148	30
81349	RCR07G102JS	152	11
81349	RCR07G102JS	156	20
81349	RCR07G102JS	164	12
81349	RCR07G103JS	108	20
81349	RCR07G103JS	137	19
81349	RCR07G103JS	144	23
81349	RCR07G103JS	148	19
81349	RCR07G103JS	150	16
81349	RCR07G103JS	152	7
81349	RCR07G103JS	156	18
81349	RCR07G104JS	109	24
81349	RCR07G104JS	139	6
81349	RCR07G104JS	144	14
81349	RCR07G105JS	115	20
81349	RCR07G105JS	144	21
81349	RCR07G121JS	108	23
81349	RCR07G121JS	156	26
81349	RCR07G122JS	117	32
81349	RCR07G122JS	122	12
81349	RCR07G122JS	135	15
81349	RCR07G122JS	142	17
81349	RCR07G122JS	148	21
81349	RCR07G122JS	150	15
81349	RCR07G123JS	120	14
81349	RCR07G123JS	144	28
81349	RCR07G124JS	132	13
81349	RCR07G124JS	144	15
81349	RCR07G131JS	154	17
81349	RCR07G132JS	132	20
81349	RCR07G152JS	107	12
81349	RCR07G152JS	108	26
81349	RCR07G152JS	137	16
81349	RCR07G152JS	148	23
81349	RCR07G152JS	154	18
81349	RCR07G153JS	120	15
81349	RCR07G153JS	137	15
81349	RCR07G153JS	142	19

FSCM	PART NUMBER	FIGURE NO.	ITEM NO.
81349	RCR07G153JS	144	27
81349	RCR07G153JS	156	24
81349	RCR07G153JS	156	30
81349	RCR07G153JS	164	14
81349	RCR07G162JS	142	24
81349	RCR07G180JS	107	16
81349	RCR07G180JS	135	11
81349	RCR07G181JS	117	37
81349	RCR07G181JS	132	26
81349	RCR07G181JS	144	20
81349	RCR07G181JS	156	13
81349	RCR07G182JS	108	24
81349	RCR07G182JS	115	24
81349	RCR07G182JS	116	16
81349	RCR07G182JS	126	10
81349	RCR07G182JS	128	9
81349	RCR07G182JS	132	23
81349	RCR07G182JS	142	20
81349	RCR07G182JS	144	12
81349	RCR07G182JS	152	8
81349	RCR07G183JS	132	17
81349	RCR07G183JS	156	14
81349	RCR07G201JS	107	10
81349	RCR07G220JS	116	19
81349	RCR07G221JS	116	20
81349	RCR07G221JS	148	25
81349	RCR07G222JS	108	28
81349	RCR07G222JS	109	22
81349	RCR07G222JS	112	8
81349	RCR07G222JS	113	7
81349	RCR07G222JS	116	17
81349	RCR07G222JS	128	11
81349	RCR07G222JS	130	13
81349	RCR07G222JS	142	16
81349	RCR07G222JS	150	20
81349	RCR07G222JS	154	12
81349	RCR07G223JS	108	18
81349	RCR07G223JS	117	35
81349	RCR07G223JS	156	19
81349	RCR07G224JS	154	21
81349	RCR07G270JS	116	22
81349	RCR07G270JS	144	25
81349	RCR07G271JS	148	27
81349	RCR07G271JS	164	8
81349	RCR07G272JS	122	8
81349	RCR07G272JS	126	6
81349	RCR07G272JS	128	12
81349	RCR07G272JS	142	12
81349	RCR07G273JS	107	17
81349	RCR07G273JS	108	17
81349	RCR07G273JS	137	17
81349	RCR07G273JS	144	16
81349	RCR07G273JS	148	26
81349	RCR07G274JS	107	15
81349	RCR07G301JS	107	9
81349	RCR07G301JS	135	10
81349	RCR07G330JS	124	12
81349	RCR07G331JS	116	18
81349	RCR07G331JS	137	18
81349	RCR07G332JS	108	25
81349	RCR07G332JS	115	25
81349	RCR07G332JS	116	21
81349	RCR07G332JS	120	12
81349	RCR07G332JS	128	13
81349	RCR07G332JS	132	21
81349	RCR07G332JS	135	17
81349	RCR07G332JS	139	8
81349	RCR07G332JS	144	26
81349	RCR07G332JS	148	17
81349	RCR07G332JS	156	15
81349	RCR07G333JS	122	7
81349	RCR07G333JS	144	30
81349	RCR07G334JS	132	16
81349	RCR07G334JS	139	7
81349	RCR07G390JS	122	10
81349	RCR07G390JS	135	18
81349	RCR07G391JS	142	15
81349	RCR07G391JS	144	22
81349	RCR07G392JS	107	13
81349	RCR07G392JS	112	9
81349	RCR07G392JS	113	8
81349	RCR07G392JS	117	36
81349	RCR07G394JS	154	13
81349	RCR07G431JS	132	18
81349	RCR07G431JS	150	14
81349	RCR07G470JS	132	25
81349	RCR07G471JS	107	11
81349	RCR07G471JS	122	6
81349	RCR07G471JS	126	8
81349	RCR07G471JS	130	15
81349	RCR07G471JS	139	13
81349	RCR07G471JS	144	13
81349	RCR07G472JS	108	21
81349	RCR07G472JS	124	10
81349	RCR07G472JS	132	22
81349	RCR07G472JS	135	13
81349	RCR07G472JS	139	10
81349	RCR07G472JS	154	14
81349	RCR07G473JS	107	14
81349	RCR07G473JS	115	22
81349	RCR07G473JS	132	14
81349	RCR07G473JS	137	14
81349	RCR07G473JS	144	17
81349	RCR07G473JS	148	29
81349	RCR07G473JS	150	18
81349	RCR07G473JS	154	15
81349	RCR07G510JS	137	13
81349	RCR07G511JS	139	12
81349	RCR07G512JS	115	21
81349	RCR07G561JS	120	11
81349	RCR07G561JS	142	14
81349	RCR07G561JS	156	16
81349	RCR07G562JS	117	34
81349	RCR07G562JS	126	11
81349	RCR07G562JS	128	10
81349	RCR07G562JS	135	16
81349	RCR07G562JS	144	24
81349	RCR07G562JS	148	24
81349	RCR07G562JS	152	10
81349	RCR07G562JS	156	21
81349	RCR07G563JS	130	16
81349	RCR07G563JS	132	15
81349	RCR07G564JS	144	29
81349	RCR07G621JS	156	22
81349	RCR07G622JS	154	19
81349	RCR07G680JS	117	33
81349	RCR07G680JS	142	21
81349	RCR07G680JS	156	29
81349	RCR07G681JS	148	18
81349	RCR07G681JS	164	10
81349	RCR07G682JS	108	19
81349	RCR07G682JS	112	10
81349	RCR07G682JS	113	9
81349	RCR07G682JS	120	13
81349	RCR07G682JS	130	14
81349	RCR07G682JS	135	14
81349	RCR07G682JS	137	20
81349	RCR07G682JS	142	18
81349	RCR07G682JS	150	17
81349	RCR07G682JS	156	17
81349	RCR07G683JS	148	28
81349	RCR07G683JS	150	19
81349	RCR07G820JS	122	13
81349	RCR07G821JS	108	22
81349	RCR07G821JS	124	9
81349	RCR07G821JS	126	7
81349	RCR07G821JS	148	22
81349	RCR07G821JS	152	12
81349	RCR07G821JS	154	20
81349	RCR07G821JS	156	27
81349	RCR07G821JS	156	28
81349	RCR07G822JS	109	21
81349	RCR07G822JS	126	9
81349	RCR07G822JS	135	12
81349	RCR07G822JS	150	22
81349	RCR07G822JS	152	9
81349	RCR07G822JS	154	16
81349	RCR07G912JS	142	13
81349	RCR07G912JS	156	23
81349	RCR20G101JS	159	15

FSCM	PART NUMBER	FIGURE NO.	ITEM NO.
81349	RCR20G102JS	164	9
81349	RCR20G470JS	115	26
81349	RCR20G561JS	109	23
81349	RCR32G154JS	159	10
81349	RCR42G564JS	158	2
81349	RER60F2370M	161	8
81349	RER60F3480M	161	7
81349	RER65F15R0R	163	3
81349	RER65F24R9R	163	4
81349	RLR20C8252FR	150	21
98291	RST-SM-1 TUR	105	121
98291	RST-SM1 TUR BLU	105	119
81349	RT10C2L103	156	25
81349	RV6LAYSA252A	105	99
81349	RWR74SR150FS	163	5
81349	RWR80S10R0FR	159	14
81349	RWR80S49R9FR	159	11
81349	RWR89S2740FR	159	13
81349	RWR89S3830FR	159	12
81349	RWR89S6R81FR	159	16
80063	SC-DL-416397	106	4
81349	SE079801	105	114
81349	SE079801	163	19
81349	SE16XC01	115	36
81349	SE18XE01	105	24
08544	SE22SL PL	133	14
08544	SE23SL PL	111	28
08544	SE36CD PL	114	22
08544	SE37SL PL	158	17
08544	SE37SL PL	159	23
08544	SE43SL PL	159	19
08544	SE44SL PL	158	13
08544	SE86SL PL	159	21
80063	SM-A-921102	108	16
80063	SM-A-921102	115	19
80063	SM-A-921171	117	6
80063	SM-A-921385	116	15
80063	SM-A-921475	154	11
80063	SM-A-921526	163	2
80063	SM-B-283567	105	109
80063	SM-B-283567	105	110
80063	SM-B-374854	105	68
80063	SM-B-374951-1	111	26
80063	SM-B-374951-2	111	20
80063	SM-B-374963	146	6
80063	SM-B-374974	142	28
80063	SM-B-374974	144	34
80063	SM-B-413506	104	26
80063	SM-B-413508-3	104	1
80063	SM-B-413508-4	104	2
80063	SM-B-413510	104	24
80063	SM-B-413512	104	22
80063	SM-B-413515	104	9
80063	SM-B-413516	104	23
80063	SM-B-413554	118	17
80063	SM-B-413554	133	11
80063	SM-B-413554	140	22
80063	SM-B-413554	146	11
80063	SM-B-413562	119	1
80063	SM-B-413595	121	1
80063	SM-B-413614	123	1
80063	SM-B-413637	125	1
80063	SM-B-413653	127	1
80063	SM-B-413673	129	1
80063	SM-B-413702	131	1
80063	SM-B-413789	138	1
80063	SM-B-413797	109	26
80063	SM-B-413797	164	15
80063	SM-B-413837	141	2
80063	SM-B-413837	143	2
80063	SM-B-413852	143	3
80063	SM-B-413901	163	8
80063	SM-B-413930	163	17
80063	SM-B-413933	140	13
80063	SM-B-413964-2	105	32
80063	SM-B-414024	111	29
80063	SM-B-414179	147	1
80063	SM-B-414197	146	3
80063	SM-B-414200	151	1
80063	SM-B-414218	149	1
80063	SM-B-414241	155	1
80063	SM-B-414257	153	1
80063	SM-B-414260	153	8
80063	SM-B-414302-4	140	21
80063	SM-B-414302-5	118	18
80063	SM-B-414302-6	158	11
80063	SM-B-414321	158	16
80063	SM-B-414321	159	24
80063	SM-B-414350	161	6
80063	SM-B-414350	162	2
80063	SM-B-414380	105	58
80063	SM-B-414387	105	49
80063	SM-B-414389	105	79
80063	SM-B-414391	105	80
80063	SM-B-414394	105	4
80063	SM-B-414397	105	115
80063	SM-B-414400	105	18
80063	SM-B-414404	105	31
80063	SM-B-414407	105	20
80063	SM-B-414417	105	37
80063	SM-B-414433	111	10
80063	SM-B-414434	111	18
80063	SM-B-414436	111	24
80063	SM-B-414646	105	69
80063	SM-B-414659	105	117
80063	SM-B-414708	105	72
80063	SM-B-414738	105	123
80063	SM-B-414762	117	41
80063	SM-B-414766	105	89
80063	SM-B-414786	105	62
80063	SM-B-414795	105	105
80063	SM-B-414796	105	102
80063	SM-B-414797	105	103
80063	SM-B-414801	105	74
80063	SM-B-414808	105	93
80063	SM-B-414819	105	124
80063	SM-B-416315	109	14
80063	SM-B-416318	109	4
80063	SM-B-416319	109	1
80063	SM-B-416320	109	3
80063	SM-B-416339-1	115	35
80063	SM-B-416356-1	107	26
80063	SM-B-416356-1	115	38
80063	SM-B-416356-1	116	31
80063	SM-B-416361	115	32
80063	SM-B-416361	116	27
80063	SM-B-416363	115	28
80063	SM-B-416363	116	26
80063	SM-B-416368	108	36
80063	SM-B-416373	107	29
80063	SM-B-416374	107	30
80063	SM-B-416376	107	27
80063	SM-B-416399	109	5
80063	SM-B-481749	115	33
80063	SM-B-481749	116	29
80063	SM-B-481760	107	24
80063	SM-B-481760	108	33
80063	SM-B-481760	115	40
80063	SM-B-481760	116	35
80063	SM-B-921113	109	20
80063	SM-B-921185	118	3
80063	SM-B-921213	118	11
80063	SM-B-921241	118	6
80063	SM-B-921255	118	9
80063	SM-B-921417	117	17
80063	SM-B-921451	146	4
80063	SM-B-921523	157	2
80063	SM-C-374807	105	64
30817	SM-C-374812	133	13
80063	SM-C-374815	105	98
80063	SM-C-374822-1	152	5
80063	SM-C-374827-1	105	1
80063	SM-C-374866	115	30
80063	SM-C-374866	116	25
80063	SM-C-374867	108	35
80063	SM-C-374877	105	9
80063	SM-C-413504-1	104	28
80063	SM-C-413504-2	104	37
80063	SM-C-413511	104	14
80063	SM-C-413513	104	13

FSCM	PART NUMBER	FIGURE NO.	ITEM NO.
80063	SM-C-413531-1	153	5
80063	SM-C-413531-10	114	3
80063	SM-C-413531-7	117	39
80063	SM-C-413564	119	7
80063	SM-C-413567-1	120	3
80063	SM-C-413567-1	124	5
80063	SM-C-413567-1	130	9
80063	SM-C-413567-1	135	5
80063	SM-C-413567-1	142	6
80063	SM-C-413567-3	117	30
80063	SM-C-413567-3	120	5
80063	SM-C-413567-3	126	2
80063	SM-C-413567-3	148	5
80063	SM-C-413567-3	156	4
80063	SM-C-413570	120	18
80063	SM-C-413571	120	20
80063	SM-C-413574	120	21
80063	SM-C-413574	122	19
80063	SM-C-413574	141	5
80063	SM-C-413574	143	6
80063	SM-C-413574	148	36
80063	SM-C-413574	150	31
80063	SM-C-413574	152	21
80063	SM-C-413574	154	30
80063	SM-C-413574	156	36
80063	SM-C-413575-1	148	38
80063	SM-C-413575-1	150	32
80063	SM-C-413575-1	152	19
80063	SM-C-413575-1	156	37
80063	SM-C-413577	112	6
80063	SM-C-413577	113	5
80063	SM-C-413577	120	7
80063	SM-C-413577	128	6
80063	SM-C-413577	130	10
80063	SM-C-413577	132	11
80063	SM-C-413577	150	11
80063	SM-C-413597	121	7
80063	SM-C-413616	123	7
80063	SM-C-413639	125	7
80063	SM-C-413655	127	7
80063	SM-C-413675	129	7
80063	SM-C-413681	130	19
80063	SM-C-413694	130	18
80063	SM-C-413704	131	7
80063	SM-C-413717	104	36
80063	SM-C-413722	133	10
80063	SM-C-413728	134	3
80063	SM-C-413730	134	1
80063	SM-C-413747	135	23
80063	SM-C-413761	136	1
80063	SM-C-413779	137	9
80063	SM-C-413791	138	8
80063	SM-C-413818-35	133	18
80063	SM-C-413818-6	133	17
80063	SM-C-413832-2	140	20
80063	SM-C-413838	141	1
80063	SM-C-413853	143	1
80063	SM-C-413884-4	160	6
80063	SM-C-413884-5	117	7
80063	SM-C-413884-6	160	9
80063	SM-C-413900-1	105	96
80063	SM-C-414114-4	105	61
80063	SM-C-414120-1	157	14
80063	SM-C-414170	104	21
80063	SM-C-414172	146	1
80063	SM-C-414181	147	7
80063	SM-C-414189	148	31
80063	SM-C-414194	148	15
80063	SM-C-414199	151	2
80063	SM-C-414202	151	7
80063	SM-C-414205	152	17
80063	SM-C-414220	149	7
80063	SM-C-414228	150	25
80063	SM-C-414243	155	7
80063	SM-C-414259	153	10
80063	SM-C-414265	154	28
80063	SM-C-414266	154	9
80063	SM-C-414276	146	2
80063	SM-C-414284	104	35
80063	SM-C-414312	157	12
80063	SM-C-414349	161	4
80063	SM-C-414349	162	1
80063	SM-C-414361	104	31
80063	SM-C-414372	105	95
80063	SM-C-414373	105	94
80063	SM-C-414376	105	118
80063	SM-C-414381	105	16
80063	SM-C-414388	105	81
80063	SM-C-414393	105	6
80063	SM-C-414399	105	17
80063	SM-C-414401	105	3
80063	SM-C-414406	105	113
80063	SM-C-414409	105	111
80063	SM-C-414432	111	7
80063	SM-C-414438	111	32
80063	SM-C-414440	111	25
80063	SM-C-414443	111	6
80063	SM-C-414475	114	14
80063	SM-C-414476	114	23
80063	SM-C-414483-1	114	12
80063	SM-C-414483-2	114	19
80063	SM-C-414484	114	20
80063	SM-C-414486	114	21
80063	SM-C-414488	114	26
80063	SM-C-414489	114	24
80063	SM-C-414649	105	51
80063	SM-C-414735	105	78
80063	SM-C-414737	105	122
80063	SM-C-414747	117	21
80063	SM-C-414759	117	15
80063	SM-C-414770	105	52
80063	SM-C-414793	105	11
80063	SM-C-414805	150	12
80063	SM-C-414968-1	111	1
80063	SM-C-414968-10	111	13
80063	SM-C-414968-2	111	2
80063	SM-C-414968-3	111	3
80063	SM-C-414968-4	111	4
80063	SM-C-414968-5	111	5
80063	SM-C-414968-6	111	17
80063	SM-C-414968-7	111	16
80063	SM-C-414968-8	111	15
80063	SM-C-414968-9	111	14
80063	SM-C-416300	115	27
80063	SM-C-416300	116	23
80063	SM-C-416306	109	7
80063	SM-C-416310	108	14
80063	SM-C-416311	109	13
80063	SM-C-416317	109	8
80063	SM-C-416321-1	108	13
80063	SM-C-416321-2	115	16
80063	SM-C-416321-2	116	12
80063	SM-C-416327-2	115	18
80063	SM-C-416327-3	116	14
80063	SM-C-416328	107	18
80063	SM-C-416329	107	19
80063	SM-C-416332	115	15
80063	SM-C-416332	116	11
80063	SM-C-416339-2	107	31
80063	SM-C-416352-1	115	17
80063	SM-C-416352-2	116	13
80063	SM-C-416400	116	24
80063	SM-C-416404	116	30
80063	SM-C-481751	104	5
80063	SM-C-481755-1	117	43
80063	SM-C-481755-2	117	45
80063	SM-C-921086	104	3
80063	SM-C-921099	108	30
80063	SM-C-921108	106	7
80063	SM-C-921125	112	12
80063	SM-C-921141	114	10
80063	SM-C-921147	114	2
80063	SM-C-921181	122	18
80063	SM-C-921285	133	2
80063	SM-C-921300	133	4
80063	SM-C-921332	140	2
80063	SM-C-921335	142	27
80063	SM-C-921347	140	1
80063	SM-C-921362	140	8
80063	SM-C-921425	117	16

FSCM	PART NUMBER	FIGURE NO.	ITEM NO.
80063	SM-C-921454	150	28
80063	SM-C-921485	146	8
80063	SM-C-921528	158	3
80063	SM-C-921533-1	163	18
80063	SM-C-921534	163	10
80063	SM-D-188980	106	6
80063	SM-D-374975	154	27
80063	SM-D-374976	154	24
80063	SM-D-374978	153	3
80063	SM-D-374983	106	1
80063	SM-D-374984	107	32
80063	SM-D-374985	107	21
80063	SM-D-374990	106	3
80063	SM-D-374995	116	28
80063	SM-D-413514	104	8
80063	SM-D-413519	104	29
80063	SM-D-413521	118	2
80063	SM-D-413522	118	1
80063	SM-D-413523	118	5
80063	SM-D-413524	118	4
80063	SM-D-413526	118	8
80063	SM-D-413528	118	13
80063	SM-D-413551	118	15
80063	SM-D-413553	118	16
80063	SM-D-413561	119	2
80063	SM-D-413594	121	2
80063	SM-D-413613	123	2
80063	SM-D-413623	124	13
80063	SM-D-413625	124	14
80063	SM-D-413627	124	15
80063	SM-D-413636	125	2
80063	SM-D-413645	126	12
80063	SM-D-413647	126	13
80063	SM-D-413652	127	2
80063	SM-D-413663	128	14
80063	SM-D-413665	128	15
80063	SM-D-413667	128	16
80063	SM-D-413672	129	2
80063	SM-D-413689-2	148	35
80063	SM-D-413690	130	17
80063	SM-D-413692	130	11
80063	SM-D-413701	131	2
80063	SM-D-413712	132	27
80063	SM-D-413714	132	28
80063	SM-D-413724	133	12
80063	SM-D-413729	134	2
80063	SM-D-413732	134	7
80063	SM-D-413735	135	20
80063	SM-D-413740	135	19
80063	SM-D-413742	135	21
80063	SM-D-413755	136	3
80063	SM-D-413756	136	4
80063	SM-D-413763	136	7
80063	SM-D-413787	138	2
80063	SM-D-413802	133	5
80063	SM-D-413816-GR1	133	7
80063	SM-D-413820	104	7
80063	SM-D-413829	140	6
80063	SM-D-413836	141	3
80063	SM-D-413851	143	4
80063	SM-D-413876	140	16
80063	SM-D-413878	140	27
80063	SM-D-413879	140	17
80063	SM-D-413892	104	25
80063	SM-D-414112	104	20
80063	SM-D-414178	147	3
80063	SM-D-414203	151	3
80063	SM-D-414207	152	18
80063	SM-D-414208	152	15
80063	SM-D-414210	152	14
80063	SM-D-414212	152	13
80063	SM-D-414217	149	2
80063	SM-D-414231	150	23
80063	SM-D-414233	150	24
80063	SM-D-414240	155	4
80063	SM-D-414256	153	2
80063	SM-D-414273	146	10
80063	SM-D-414275	146	13
80063	SM-D-414288	104	32
80063	SM-D-414297	104	34
80063	SM-D-414337	160	7
80063	SM-D-414341	160	8
80063	SM-D-414343	160	11
80063	SM-D-414364-GR10	104	41
80063	SM-D-414364-GR11	104	44
80063	SM-D-414364-GR12	104	43
80063	SM-D-414364-GR13	104	39
80063	SM-D-414364-GR4	104	38
80063	SM-D-414364-GR5	104	46
80063	SM-D-414364-GR6	104	45
80063	SM-D-414364-GR8	104	40
80063	SM-D-414364-GR9	104	42
80063	SM-D-414366	104	6
80063	SM-D-414384	105	21
80063	SM-D-414385	105	23
80063	SM-D-414396	105	25
80063	SM-D-414402	105	44
80063	SM-D-414442	111	34
80063	SM-D-414445	111	27
80063	SM-D-414496	105	10
80063	SM-D-414632	105	97
80063	SM-D-414743	117	10
80063	SM-D-414744	117	19
80063	SM-D-414798	105	108
80063	SM-D-414799	105	107
80063	SM-D-414800	105	106
80063	SM-D-416342	105	54
80063	SM-D-416345	105	60
80063	SM-D-416370	106	2
80063	SM-D-416395	115	31
80063	SM-D-421137	111	12
80063	SM-D-439956	104	15
80063	SM-D-921094	106	5
80063	SM-D-921100	108	29
80063	SM-D-921109	109	2
80063	SM-D-921110	109	31
80063	SM-D-921122	111	22
80063	SM-D-921126	105	59
80063	SM-D-921128	112	11
80063	SM-D-921132	111	21
80063	SM-D-921136	113	10
80063	SM-D-921138	111	19
80063	SM-D-921142	114	9
80063	SM-D-921179	121	3
80063	SM-D-921188	122	15
80063	SM-D-921201	118	12
80063	SM-D-921202	119	3
80063	SM-D-921203	120	17
80063	SM-D-921214	123	3
80063	SM-D-921227	118	10
80063	SM-D-921228	125	3
80063	SM-D-921242	127	3
80063	SM-D-921256	129	3
80063	SM-D-921271	118	7
80063	SM-D-921272	131	3
80063	SM-D-921286	134	4
80063	SM-D-921288	135	22
80063	SM-D-921301	136	2
80063	SM-D-921304	137	23
80063	SM-D-921316	133	6
80063	SM-D-921317	138	3
80063	SM-D-921333	141	4
80063	SM-D-921348	143	5
80063	SM-D-921412	105	70
80063	SM-D-921413	117	2
80063	SM-D-921421	117	8
80063	SM-D-921437	147	2
80063	SM-D-921439	148	33
80063	SM-D-921452	149	3
80063	SM-D-921453	150	29
80063	SM-D-921455	150	26
80063	SM-D-921486	155	3
80063	SM-D-921487	156	38
80063	SM-D-921488	156	35
80063	SM-D-921504	104	19
80063	SM-D-921505	159	18
80063	SM-D-921507	157	6
80063	SM-D-921510	163	11
80063	SM-D-921511	157	4
80063	SM-D-921514	157	1

FSCM	PART NUMBER	FIGURE NO.	ITEM NO.
80063	SM-D-921518	157	7
80063	SM-D-921520	162	4
80063	SM-D-921525	157	5
80063	SM-D-921530	104	33
80063	SM-D-921531	163	20
80063	SM-D-921541	158	5
80063	SM-D-921544	157	3
80063	SM-E-414411	105	43
97954	SMI7MDM70	117	20
95238	SM11-20S-GD	105	53
81349	SR2CF3682HG0	105	33
83512	S7892	105	5
16352	VVC354	148	2
71590	YKF007-01LOP	146	7
76385	Z2287-RC	109	30
05574	000300-0315	140	14
05574	000300-0316	159	17
05574	000401-0014	140	18
05574	020-009-000	140	19
71468	051380-0000	157	13
18796	0801011X5F0 102K	108	9
18796	0801011X5F0 102K	115	3
18796	0801011X5F0 102K	116	3
16352	1N3551	115	1
80131	1N3552	108	1
04713	1N4001	142	2
99378	100-225-6-5	158	18
99378	100-225-6-5	159	22
07047	10012-DAP	142	26
06560	10100-171	108	15
97469	10128-45	115	14
80740	1018-112-011	105	66
07187	1782933-79	159	8
30655	22NCFMA2-40	105	116
30655	22NCFMA2-40	161	1
30655	22NCFMA2-40	162	5
30655	22NC6-40	117	42
32997	220W-1-102	139	9
32997	220W-1-203	144	18
32997	220W-1-502	132	19
32997	220W-1-502	164	13
02660	27-3	107	6
02660	27-3	108	12
02660	27-3	115	13
02660	27-3	116	9
02660	27-3	124	7
02660	27-3	132	10
18915	3A-3	107	28
72982	301-011P3K0259B	115	9
72982	301-011U2J0309B	108	3
72982	301-011U2K0109B	108	10
72982	301655P2G0170G	115	6
72982	302-012S3B0109C	107	5
06978	318-233-01	122	14
71279	3226-3	107	23
71279	3226-3	108	32
71279	3226-3	115	41
71279	3226-3	116	36
65092	341124	105	91
78189	3502-10-5S	161	5
78189	3502-10-55	162	3
71279	3653-2-01	115	37
71279	3653-2-01	116	33
42498	38531-3	157	15
88447	38871-G-2	109	12
88447	38871-G-2	140	26
88447	38881-L	109	9
88447	38881-L	118	19
88447	38881-L	133	15
88447	38881-L	140	23
88447	38881-L	146	12
88447	38891-W	109	11
88447	38891-W	140	24
88447	38901-R	109	10
88447	38901-R	140	25
96214	410894-38	105	28
83486	43-04-04120CD PL	111	30
83486	43-04-04120CD PL	119	5
83486	43-04-04120CD PL	121	5
83486	43-04-04120CD PL	123	5
83486	43-04-04120CD PL	125	5
83486	43-04-04120CD PL	127	5
83486	43-04-04120CD PL	129	5
83486	43-04-04120CD PL	131	5
83486	43-04-04120CD PL	134	5
83486	43-04-04120CD PL	138	6
83486	43-04-04120CD PL	147	5
83486	43-04-04120CD PL	149	5
83486	43-04-04120CD PL	151	5
83486	43-04-04120CD PL	155	5
83486	43-04-04120NI PL	136	5
70528	453S-060	142	29
70528	453S-060	148	37
70528	453S-060	150	30
70528	453S-060	152	20
70528	453S-060	154	29
93292	500-1010	109	19
93292	500-1011	109	25
05009	5023	112	5
05009	5023	113	4
05009	51-311-3196	133	16
79136	5103-25-H	114	18
79136	5133-15	104	27
79136	5555G-7	153	9
91506	6018-5A	158	12
91506	6020-45A	159	20
78189	61-040441-40-4702-4802	109	6
26667	6739	160	3
26667	6826	160	4
26667	6876	160	5
77820	72-344092-10P	105	14
98278	754	114	15
13103	7717-20-DAP	122	17
13103	7717-20-DAP	144	33
80045	812020	140	3
80045	812029	140	7
80045	816065	154	22
92208	819A-1	133	1
50763	831161	156	31
80045	834020	104	16
92208	847A-1	133	3
72982	855-027-X5T0472M	107	2
72982	855-027-X5T0472M	109	18
72982	855-027-X5T0472M	116	1
18796	855-222X5S0-103M	117	28
18796	855-222X5S0-103M	120	4
18796	855-222X5S0-103M	122	2
18796	855-222X5S0-103M	126	1
18796	855-222X5S0-103M	128	2
18796	855-222X5S0-103M	130	4
18796	855-222X5S0-103M	132	9
18796	855-222X5S0-103M	135	1
18796	855-222X5S0-103M	142	7
18796	855-222X5S0-103M	152	2
18796	855-222X5S0-103M	164	4
72982	855-511X5S0332M	124	2
72982	855-511X5S0332M	142	8
72982	855-511X5S0332M	150	3
43710	921139	114	1
43710	921140	114	4
04221	95-3559	140	5
72962	96NM107-62	105	41
30817	97-110H	111	33

RECOMMENDED CHANGES TO EQUIPMENT TECHNICAL PUBLICATIONS

SOMETHING WRONG WITH THIS PUBLICATION?

FROM: (PRINT YOUR UNIT'S COMPLETE ADDRESS)
Commander
Stateside Army Depot
ATTN: AMSTA-US
Stateside, N.J. 07703

DATE SENT
10 July 1975

PUBLICATION NUMBER	PUBLICATION DATE	PUBLICATION TITLE
TM 11-5840-340-12	23 Jan 74	Radar Set AN/PRC-76

BE EXACT PIN-POINT WHERE IT IS

PAGE NO	PARAGRAPH	FIGURE NO	TABLE NO	IN THIS SPACE TELL WHAT IS WRONG AND WHAT SHOULD BE DONE ABOUT IT
2-25	2-28			Recommend that the installation antenna alignment procedure be changed throughout to specify a 2° IFF antenna lag rather than 1°. REASON: Experience has shown that with only a 1° lag, the antenna servo system is too sensitive to wind gusting in excess of 25 knots, and has a tendency to rapidly accelerate and decelerate as it hunts, causing strain to the drive train. Hunting is minimized by adjusting the lag to 2° without degradation of operation.
3-10	3-3		3-1	Item 5, Function column. Change "2 db" to "3db." REASON: The adjustment procedure the the TRANS POWER FAULT indicator calls for a 3 db (500 watts) adjustment to light the TRANS POWER FAULT indicator.
5-6	5-8			Add new step f.1 to read, "Replace cover plate removed in step e.1, above." REASON: To replace the cover plate.
		F03		Zone C 3. On J1-2, change "+24 VDC to "+5 VDC." REASON: This is the output line of the 5 VDC power supply. +24 VDC is the input voltage.

SAMPLE

PRINTED NAME GRADE OR TITLE AND TELEPHONE NUMBER	SIGN HERE
SSG I. M. DeSpiritof 999-1776	SSG I. M. DeSpiritof

DA, FORM 1 JUL 79 2028-2 PREVIOUS EDITIONS ARE OBSOLETE.

P.S.--IF YOUR OUTFIT WANTS TO KNOW ABOUT YOUR RECOMMENDATION MAKE A CARBON COPY OF THIS AND GIVE IT TO YOUR HEADQUARTERS.

TEAR ALONG PERFORATED LINE

RECOMMENDED CHANGES TO EQUIPMENT TECHNICAL PUBLICATIONS

THEN...JOT DOWN THE DOPE ABOUT IT ON THIS FORM. CAREFULLY TEAR IT OUT, FOLD IT AND DROP IT IN THE MAIL.

SOMETHING WRONG WITH THIS PUBLICATION?

FROM: (PRINT YOUR UNIT'S COMPLETE ADDRESS)

DATE SENT

PUBLICATION NUMBER	PUBLICATION DATE	PUBLICATION TITLE
TM 11-5820-401-34P-2-1	31 JAN 83	Receiver-Transmitters Radio RT-246/VRC and RT-246A/VRC

BE EXACT PIN-POINT WHERE IT IS

PAGE NO	PARA GRAPH	FIGURE NO	TABLE NO

IN THIS SPACE TELL WHAT IS WRONG AND WHAT SHOULD BE DONE ABOUT IT:

PRINTED NAME GRADE OR TITLE AND TELEPHONE NUMBER

SIGN HERE

DA FORM 1 JUL 79 2028-2

PREVIOUS EDITIONS ARE OBSOLETE

P.S.--IF YOUR OUTFIT WANTS TO KNOW ABOUT YOUR RECOMMENDATION MAKE A CARBON COPY OF THIS AND GIVE IT TO YOUR HEADQUARTERS

TEAR ALONG PERFORATED LINE

REVERSE OF DA FORM 2028-2

TEAR ALONG PERFORATED LINE

FILL IN YOUR UNIT'S ADDRESS

FOLD BACK

DEPARTMENT OF THE ARMY

OFFICIAL BUSINESS
PENALTY FOR PRIVATE USE $300

POSTAGE AND FEES PAID
DEPARTMENT OF THE ARMY
DOD 314

U.S. MAIL

Commander
US Army Communications-Electronics Command
and Fort Monmouth
ATTN: DRSEL-ME-MP
Fort Monmouth, New Jersey 07703

RECOMMENDED CHANGES TO EQUIPMENT TECHNICAL PUBLICATIONS

THEN...JOT DOWN THE DOPE ABOUT IT ON THIS FORM. CAREFULLY TEAR IT OUT, FOLD IT AND DROP IT IN THE MAIL.

SOMETHING WRONG WITH THIS PUBLICATION?

FROM: (PRINT YOUR UNIT'S COMPLETE ADDRESS)

DATE SENT

PUBLICATION NUMBER	PUBLICATION DATE	PUBLICATION TITLE
TM 11-5820-401-34P-2-1	31 JAN 83	Receiver-Transmitters Radio RT-246/VRC and RT-246A/VRC

BE EXACT PIN-POINT WHERE IT IS

PAGE NO	PARAGRAPH	FIGURE NO	TABLE NO

IN THIS SPACE TELL WHAT IS WRONG AND WHAT SHOULD BE DONE ABOUT IT:

PRINTED NAME GRADE OR TITLE AND TELEPHONE NUMBER

SIGN HERE

DA FORM 1 JUL 79 2028-2

PREVIOUS EDITIONS ARE OBSOLETE

P.S.--IF YOUR OUTFIT WANTS TO KNOW ABOUT YOUR RECOMMENDATION MAKE A CARBON COPY OF THIS AND GIVE IT TO YOUR HEADQUARTERS

TEAR ALONG PERFORATED LINE

REVERSE OF DA FORM 2028-2

TEAR ALONG PERFORATED LINE

FILL IN YOUR UNIT'S ADDRESS

FOLD BACK

DEPARTMENT OF THE ARMY

POSTAGE AND FEES PAID
DEPARTMENT OF THE ARMY
DOD 314

U.S. MAIL

OFFICIAL BUSINESS
PENALTY FOR PRIVATE USE $300

Commander
US Army Communications-Electronics Command
and Fort Monmouth
ATTN: DRSEL-ME-MP
Fort Monmouth, New Jersey 07703

RECOMMENDED CHANGES TO EQUIPMENT TECHNICAL PUBLICATIONS

THEN...JOT DOWN THE DOPE ABOUT IT ON THIS FORM. CAREFULLY TEAR IT OUT, FOLD IT AND DROP IT IN THE MAIL.

SOMETHING WRONG WITH THIS PUBLICATION?

FROM: (PRINT YOUR UNIT'S COMPLETE ADDRESS)

DATE SENT

PUBLICATION NUMBER	PUBLICATION DATE	PUBLICATION TITLE
TM 11-5820-401-34P-2-1	31 JAN 83	Receiver-Transmitters Radio RT-246/VRC and RT-246A/VRC

BE EXACT PIN-POINT WHERE IT IS

PAGE NO.	PARA-GRAPH	FIGURE NO.	TABLE NO.

IN THIS SPACE TELL WHAT IS WRONG AND WHAT SHOULD BE DONE ABOUT IT:

PRINTED NAME GRADE OR TITLE AND TELEPHONE NUMBER

SIGN HERE

DA FORM 1 JUL 79 2028-2

PREVIOUS EDITIONS ARE OBSOLETE

P.S.- IF YOUR OUTFIT WANTS TO KNOW ABOUT YOUR RECOMMENDATION MAKE A CARBON COPY OF THIS AND GIVE IT TO YOUR HEADQUARTERS

TEAR ALONG PERFORATED LINE

REVERSE OF DA FORM 2028-2

FILL IN YOUR UNIT'S ADDRESS

FOLD BACK

DEPARTMENT OF THE ARMY

OFFICIAL BUSINESS
PENALTY FOR PRIVATE USE $300

POSTAGE AND FEES PAID
DEPARTMENT OF THE ARMY
DOD 314

U.S. MAIL

TEAR ALONG PERFORATED LINE

Commander
US Army Communications-Electronics Command
and Fort Monmouth
ATTN: DRSEL-ME-MP
Fort Monmouth, New Jersey 07703

By Order of the Secretary of the Army:

E. C. MEYER
General, United States Army
Chief of Staff

Official:

ROBERT M. JOYCE
Major General, United States Army
The Adjutant General

DISTRIBUTION

To be distributed in accordance with DA Form 12-51, Direct Support and General Support Maintenance requirements for RT-246/VRC.

☆ U. S. GOVERNMENT PRINTING OFFICE : 1989 0 - 242-451 (5001)

PIN : 034354-000